C. KNITTEL AND N. KESSLERING.

THREE-WAY CLAMP.

APPLICATION FILED OCT. 6, 1919.

1,402,621. Patented Jan. 3, 1922.

2 SHEETS—SHEET 1.

Fig. 1.

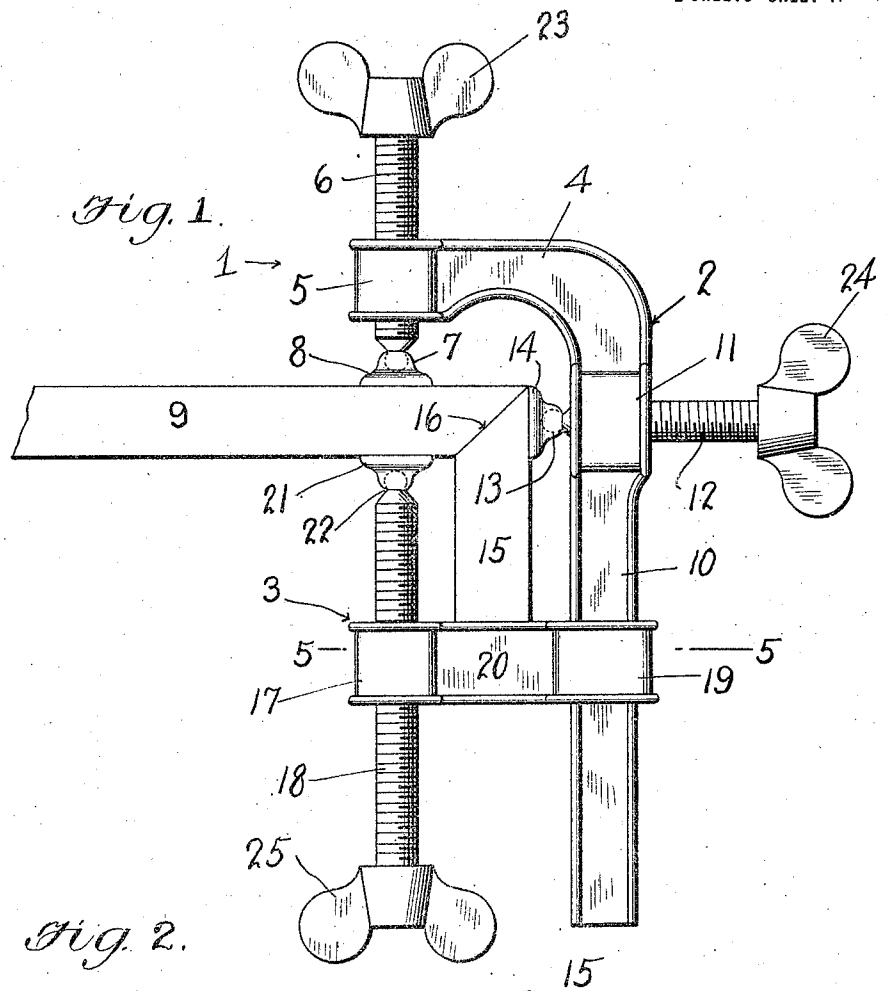

Fig. 2.

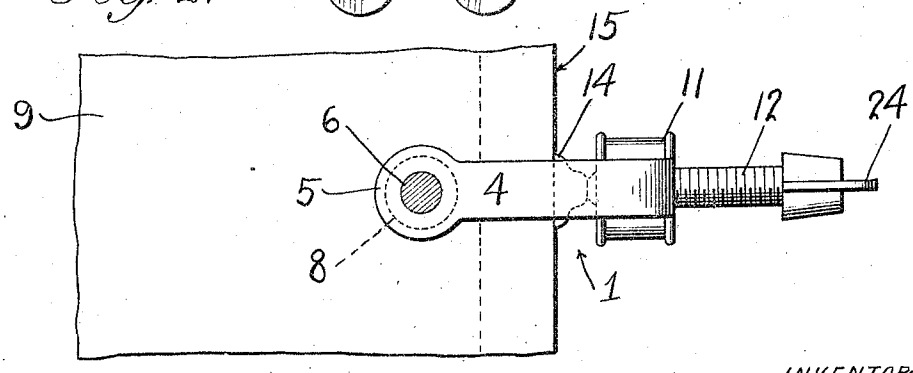

INVENTORS
Nicholaus Kesslering
and Carl R. Knittel

WITNESSES
L. B. James

BY John P. Dubbie
ATTORNEY

C. KNITTEL AND N. KESSLERING.

THREE-WAY CLAMP.

APPLICATION FILED OCT. 6, 1919.

1,402,621. Patented Jan. 3, 1922.

2 SHEETS—SHEET 2.

Fig. 3.

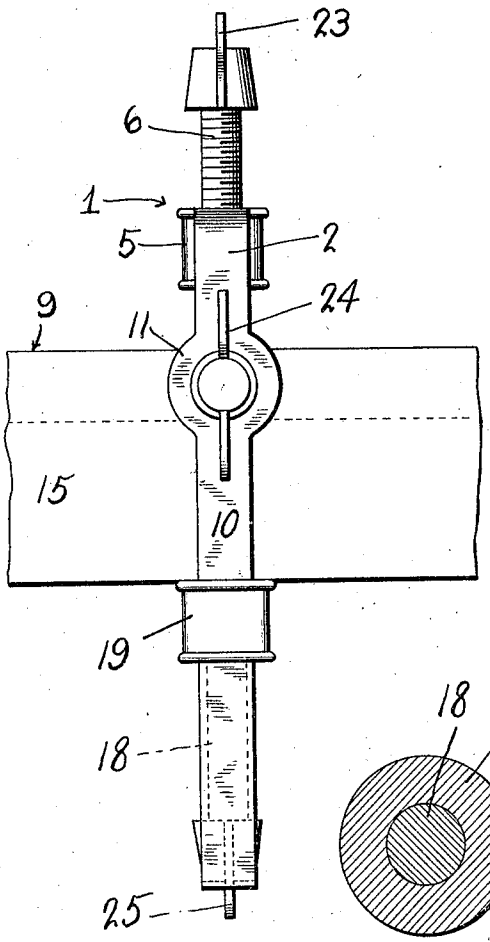

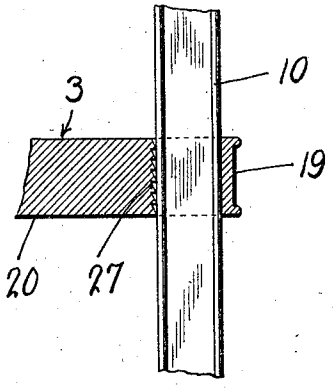

Fig. 4.

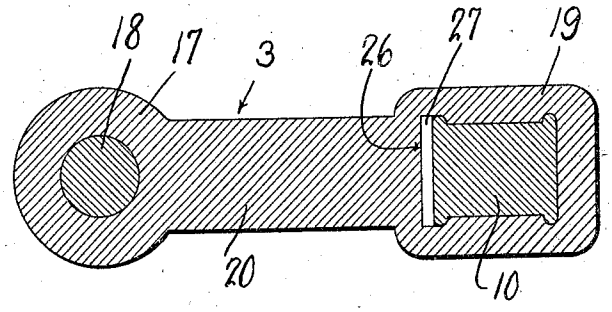

Fig. 5.

WITNESSES

L. B. James

INVENTORS

Nicholous Kesslering and Carl R. Knittel

BY John P. Duffie

ATTORNEY

UNITED STATES PATENT OFFICE.

CARL KNITTEL AND NICHOLAUS KESSLERING, OF QUINCY, ILLINOIS.

THREE-WAY CLAMP.

1,402,621. Specification of Letters Patent. Patented Jan. 3, 1922.

Application filed October 6, 1919. Serial No. 328,840.

To all whom it may concern:

Be it known that we, CARL KNITTEL and NICHOLAUS KESSLERING, citizens of the United States, residing at Quincy, in the county of Adams and State of Illinois, have invented certain new and useful Improvements in Three-Way Clamps, of which the following is a specification.

This invention relates to new and useful improvements in clamps and has for its object to provide a simple and improved form of clamp especially adapted for holding a corner joint, a mitre joint, an edge band or in making a pilaster, etc.

With the foregoing and other objects in view that will appear as the nature of the invention is better understood, the same consists in the novel features of construction, combination and arrangement of parts illustrated in the drawings and more particularly pointed out in the appended claim.

In the accompanying drawings which are for illustrative purposes only and are therefore not drawn to scale:—

Fig. 1 is a side view, illustrating the application of our invention.

Fig. 2 is a top plan view of Fig. 1.

Fig. 3 is an edge view of Fig. 1.

Fig. 4 is a detail fragmentary sectional view and Fig. 5 is a horizontal section taken on line 5—5 of Fig. 1, with the parts represented on an enlarged scale.

Referring to the drawings for a more particular description of the invention and in which drawings like parts are designated by like reference characters throughout the several views, the numeral 1 designates the clamp, as a whole, which comprises the upper relatively stationary section 2 and the lower adjustable section 3. Section 2 of the clamp is formed with a horizontal portion 4 provided at its outer end with a tubular bearing 5 which is interiorly threaded for screw threaded engagement with the clamping screw 6, to the inner end of which is swiveled, as at 7, the flat clamping plate 8, which engages the outer edge of one of the parts or sections, as 9, of the work. Said section 2 is also formed with a longer depending right angularly disposed leg portion 10, the upper end of which is provided with a tubular bearing 11, which is interiorly threaded for screw threaded engagement with the clamping screw 12, to the inner end of which is also swiveled, as at 13, the flat clamping plate 14, which engages the outer edge of part or section 15 of the work opposite the joint 16.

The adjustable section 3 of our improved clamp comprises an inner tubular bearing 17 which is interiorly threaded for screw threaded engagement with clamping screw 18, an outer guide portion 19 which is of hollow substantially rectangular form and receives the leg portion 10 of relatively stationary section 2 of the clamp and an intermediate work engaging portion 20 which engages the bottom edge of section or part 15 of the work and holds the same in place while the clamping screws are screwed up into clamping position. A clamping plate 21 is swiveled, as at 22, to the clamping screw 18 and engages the inner edge of the section or part 9 of the work. The outer ends of the clamping screws 6, 12 and 18 are equipped with the thumb nuts 23, 24 and 25, respectively, the purpose of which will be apparent.

One inner end wall, as 26, of the guide portion 19 of the adjustable clamp section 3 is formed with a series of inclined teeth 27 for holding the latter in place against the work until the clamping screw 18 is screwed into clamping position.

With the use of our improved clamp, pressure can be quickly applied against the work from three different directions and both pieces of the work clamped at the same time without the use of any blocks. In the old method of applying an edge band on a flat piece of work, a number of blocks are glued on a flat surface and then other blocks glued on the edge band and then hand clamped. After the glue is set, these blocks necessarily have to be removed and the surface sandpapered over again to remove the marks of the blocks. With the use of our improved clamp, such expenditure of time and labor is obviated, as will be apparent.

An important feature of our improved clamp is the work engaging portion of the adjustable clamp section 3, which holds one piece of work squarely in place until the clamping screws are screwed up into clamping position.

From the foregoing description taken in connection with the drawings, it is thought that the construction, operation and advantages of our invention will be readily understood without requiring a more extended explanation.

Having described our invention, what we

claim as new and desire to secure by Letters Patent, is:—

A clamp of the character specified, comprising a relatively stationary section of right-angled form, and adjustable clamp section comprising a guide portion slidably engaging one member of the stationary section and a work engaging portion adapted to fit against one piece of the work and hold the same squarely in position, two directly opposed clamping screws working through the stationary and adjustable clamp sections and engaging opposite edges of one piece of the work, a third clamping screw working through the stationary clamp section at right angles to said first mentioned screws and engaging the other piece of the work and teeth formed on the inner wall of the guide portion of the adjustable clamp section.

In testimony whereof we affix our signatures.

C. KNITTEL.
NICHOLAUS KESSLERING.