May 21, 1963 C. CASTELLI 3,090,271

CONTAINER

Filed July 18, 1958

FIG. 1

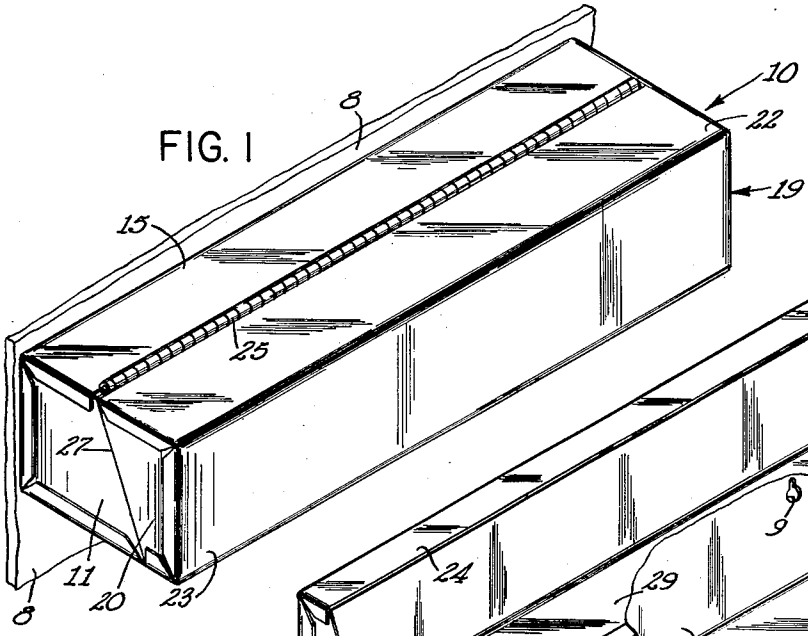

FIG. 2

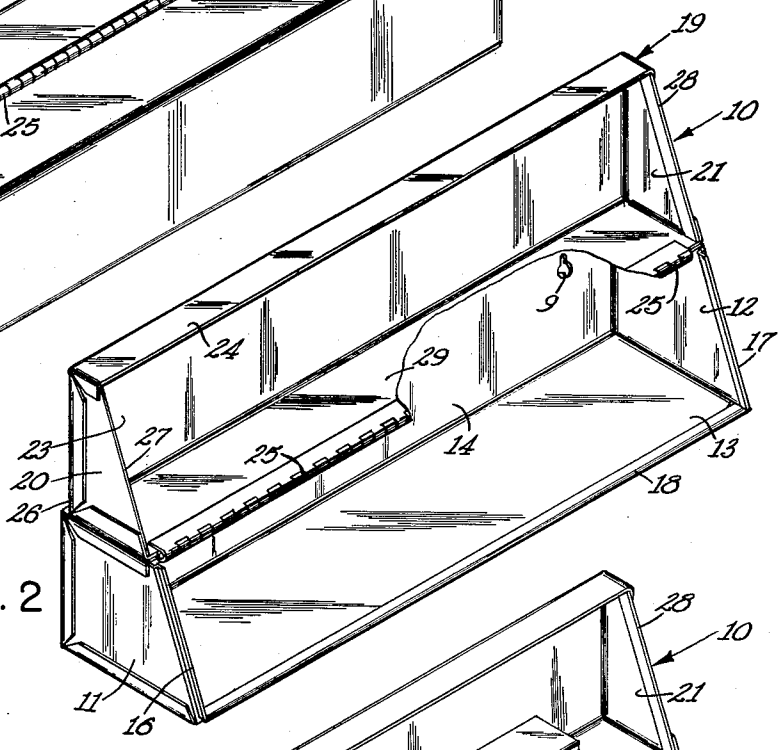

FIG. 3

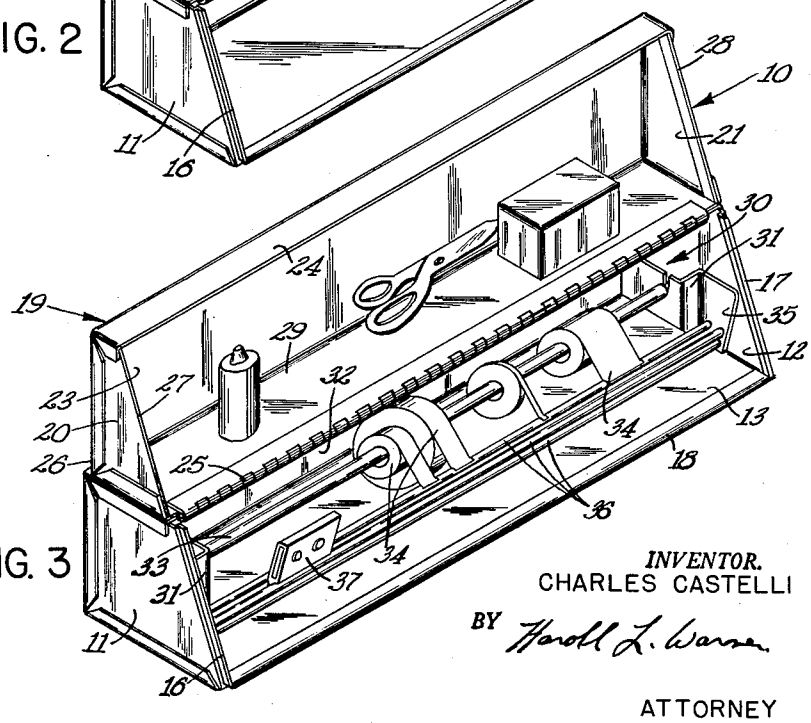

INVENTOR.
CHARLES CASTELLI

BY Harold L. Warner

ATTORNEY

United States Patent Office

3,090,271

Patented May 21, 1963

3,090,271

CONTAINER

Charles Castelli, New Brunswick, N.J., assignor to Johnson & Johnson, a corporation of New Jersey

Filed July 18, 1958, Ser. No. 749,548
2 Claims. (Cl. 83—614)

The present invention is drawn to a container adapted to be hung on a wall or other vertical surface which is particularly suitable for medicinal supplies or for housing tape cutting mechanism of the type described, for example, in co-pending application Serial No. 731,658.

The container, which has a pleasing appearance both when in the closed and open position, is so designed that when the container is open shelf space is provided on which can be placed any items such as bandage rolls medication, scissors, etc. that may normally be kept in the container but have been removed for temporary use. The cover of the container, a portion of which provides the shelf referred to when the container is open, is maintained in both the open and closed position by gravity, no catch or locking means being necessary.

Various objects and advantages of this invention will become apparent from the following description taken in connection with the accompanying drawings wherein are set forth by way of illustration and example certain embodiments of this invention. Referring to the drawings,

FIG. 1 is a perspective view of a container of the present invention with its cover closed;

FIG. 2 is a perspective view of the container in the open position; and

FIG. 3 is a view of the container with an adhesive tape cutting mechanism contained therein.

Referring to the drawings, it will be noted that the container comprises a trapezoidal shaped box **10** having sides **11** and **12**, a bottom **13**, back **14** and top **15**. The front edges **16** and **17** of the sides slope outwardly from the top **15** of the container to the outer edge **18** of the bottom **13** of the container. A cover member **19** comprising ends **20** and **21**, a top **22**, a vertical side **23** and a bottom **24** is secured by hinge means **25** to the outer edge of the rigid top **15** of the container proper. Openings as shown at **9** at either end of the inside top of back **14** are provided for hanging the container on or fastening the container to a vertical surface such as wall **8**.

The top **22** of the pivoted cover **19** has approximately the same proportions as the top **15** of the container body **10**. It is generally preferred that the top **22** of the cover be slightly narrower than the top **15** of the container so that when the cover is opened to the open position, as illustrated in FIG. 2, there will be no chance of the edge **26** of the cover hitting the wall or other vertical surface to which the container may be attached.

It will be noted that the cover ends **20** and **21** have sloping edges **27** and **28** which are adapted to coincide with the sloping edges **16** and **17** of the ends of the container body **10** so that when the cover **19** is in closed position, the ends of the closed container have a rectangular appearance, as illustrated in FIG. 1. The bottom **24** of the pivoted cover member **19** is also so proportioned with respect to the bottom of the container body **10** that when the container is closed, it has the rectangular appearance referred to.

The outer edges **16** and **17** of the container sides **11** and **12** and the outer edge **18** of the container bottom **13** are bent inwardly at right angles and then out again, as illustrated in FIGS. 2 and 3, to provide an overlapping of the edges of the container body **10** with the edges of the cover **19** when the container is closed.

Referring to FIG. 2, it will be noted that when the cover **19** of the container is raised and rests in its fully open position, it provides a shelf space **29** on which various items may be placed which are being used but are temporarily laid aside. This is particularly useful where the container is filled with many items, some of which are frequently used such, for example, as gauze and scissors, which can be placed on the shelf where they are readily accessible.

In my co-pending application Serial No. 731,658, filed May 4, 1958, an adhesive tape cutting mechanism is described which may either be used with or without a container. The present container is particularly suitable for containing a tape cutting mechanism of this general type. Referring to FIG. 3, a container of the present invention is illustrated in which is placed a tape cutting mechanism **30** similar to that described in my co-pending application Serial No. 731,658.

The tape cutter is contained on a bracket **31** that is secured to the container body. The back portion **32** of the bracket is preferably removably secured to the back **14** of the container by screws or other fastening means not shown. The bracket supports a removable spindle **33** on which rolls of adhesive tape **34** are carried. The arms **35** of the bracket carry guide rods **36** for the cutter carriage **37** which contains a cutting blade not shown, the cutting edge of the blade projecting, on a slant, down between the uppermost of the guide rods **36**. The cutter carriage **37** slides between the rods **36** to sever any piece of tape that is drawn from one of the rolls **40**. The severed end of the adhesive tape is left adhering to the innermost of the top guide rods, as illustrated in FIG. 3, where it is readily available for further withdrawal of tape when needed.

Because tape rolls are relatively bulky, appreciable space must be provided for insertion of new rolls. There is no problem of insertion of new rolls on spindle **33** where the tape cutting mechanism is not enclosed. However, when placed in a container, there must be sufficient space between the container edge and the guide rods to permit insertion of the spindle when it contains new rolls of adhesive tape. With conventional containers, the container would have to be of substantial size to provide this space. However, with the present container, the sloping sides **11** and **12** and narrower top **15** than bottom **13** provide adequate room for removal and insertion of the spindle **33** with new rolls of adhesive tape. By this construction, a gravity-closing cover with its advantages is available while at the same time ample space is provided for insertion of new rolls of adhesive tape. Also, the shelf space **29**, provided when the cover is open, gives an ideal place for setting other items that the user of the tape rack dispenser may have been using. These might be any of the usual items, such as medicaments, rolls of gauze bandage, scissors for cutting the gauze, etc.

Although in FIG. 3 the cutter mechanism is illustrated as mounted on a separate bracket that is inserted into the container, the bracket **31** can be dispensed with and the guide rods **36** carried by the ends **11** and **12** of the container body. Also, the spindle can be mounted directly on flanges that could readily be carried by the container ends, the cutter mechanism thus becoming an integral part of the container.

A particular embodiment of the invention has been used to illustrate the same. The invention, however, is not limited to this specific embodiment, variations and modifications well within the spirit and scope of the invention being readily apparent on reading the specification.

Having thus described my invention, I claim:

1. In a tape dispenser for adhesive tapes, a rectangular shaped container having a body portion and a cover portion adapted to be raised for opening said container and lowered for closing the same, said container having a back, front, top, bottom, and two ends, means on said back for mounting said container body on a vertical surface, a removable spindle adapted to hold rolls of adhesive tape extending lengthwise within said container body portion spaced from said container bottom and top, spindle supporting means inside said container body portion and secured thereto so as not to be movable relative to said container body portion, guide rods extending between the ends of said container and in front of said removable spindle, said guide rods being secured to said container body portion so as not to be movable relative thereto, and a cutter carriage slidably mounted on said guide rods, said spindle, guide rods and cutter carriage all being enclosed within said container when said cover portion is lowered to closed position, the top of said container being in two sections secured by hinge means to each other, one section being a part of said container body portion and the other section being a part of said container cover portion so that said container top can be folded back on itself to give more ready access to said tape supporting spindle for inserting and removing tape rolls placed thereon, the distance between the top of said container and said guide rods being insufficient to permit insertion of said spindle with full rolls of tape should said top not be foldable on itself, the top of said container when folded on itself being substantially narrower than the bottom of said container when said cover is fully opened and providing an unrestricted shelf.

2. In a tape dispenser for adhesive tapes, a rectangular shaped container having a body portion and a cover portion adapted to be raised for opening said container and lowered for closing the same, said container having a back, front, top, bottom, and two ends, means on said back for mounting said container body on a vertical surface, a removable spindle adapted to hold rolls of adhesive tape extending lengthwise within said container

body portion spaced from said container bottom and top, spindle supporting means inside said container body portion and secured thereto so as not to be movable relative to said container body portion, guide rods extending between the ends of said container and in front of said removable spindle, said guide rods being secured to said container body portion so as not to be movable relative thereto, and a cutter carriage slidably mounted on said guide rods, said spindle, guide rods and cutter carriage all being enclosed within said container when said cover portion is lowered to closed position, the top of said container being in two sections secured by hinge means to each other, one section being a part of said container body portion and the other section being a part of said container cover portion so that said container top can be folded back on itself to give more ready access to said tape supporting spindle for inserting and removing tape rolls placed thereon, the distance between the top of said container and said guide rods being insufficient to permit insertion of said spindle with full rolls of tape should said top not be foldable on itself, the top of said container when folded on itself being substantially narrower than the bottom of said container when said cover is fully opened and providing an unrestricted shelf, said cover portion comprising the front of said container, the forward portion of the top of said container, and part of the ends of said container, and closing by gravity to completely cover said guide rods and cutter carriage, said rectangular shaped container having a substantially right triangular shape when viewed from the end thereof when open.

References Cited in the file of this patent

UNITED STATES PATENTS

1,582,823	Jones	Apr. 27, 1926
1,761,331	Dewey	June 3, 1930
1,925,409	Shriver	Sept. 5, 1933
2,322,950	Madsen	June 29 1943

FOREIGN PATENTS

161,252	Germany	July 8, 1905
860,150	France	Sept. 24, 1940