May 1, 1934. H. W. RUPPLE 1,956,999

MAGAZINE FEED FOR SINGLE SPINDLE MACHINES

Filed Sept. 4, 1931 3 Sheets-Sheet 1

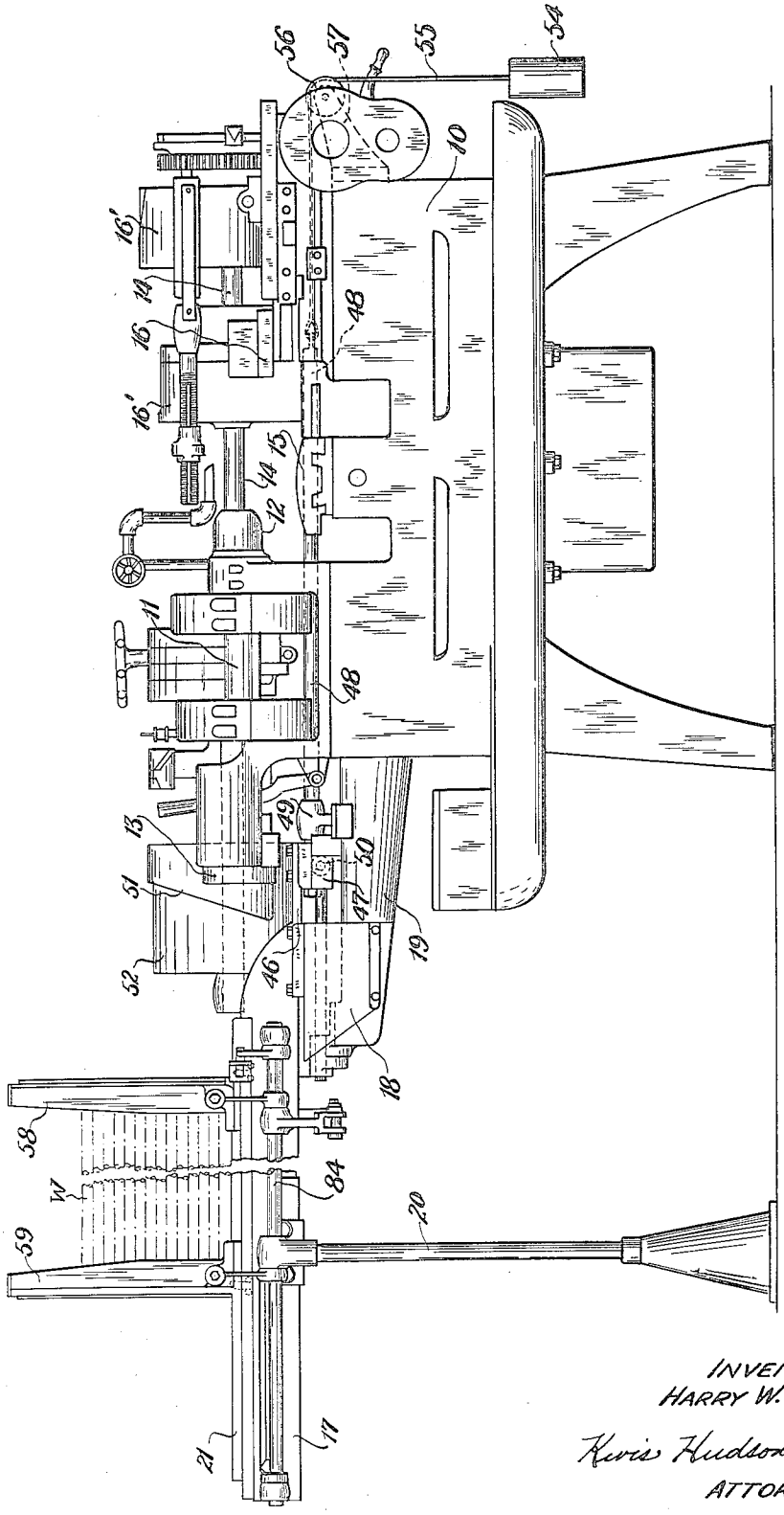

FIG. 1

INVENTOR:
HARRY W. RUPPLE

Kerr, Hudson & Kent
ATTORNEYS.

May 1, 1934. H. W. RUPPLE 1,956,999

MAGAZINE FEED FOR SINGLE SPINDLE MACHINES

Filed Sept. 4, 1931 3 Sheets-Sheet 2



FIG. 7

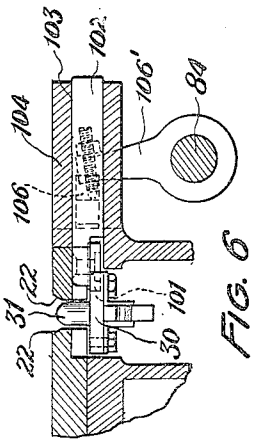

FIG. 6

FIG. 2

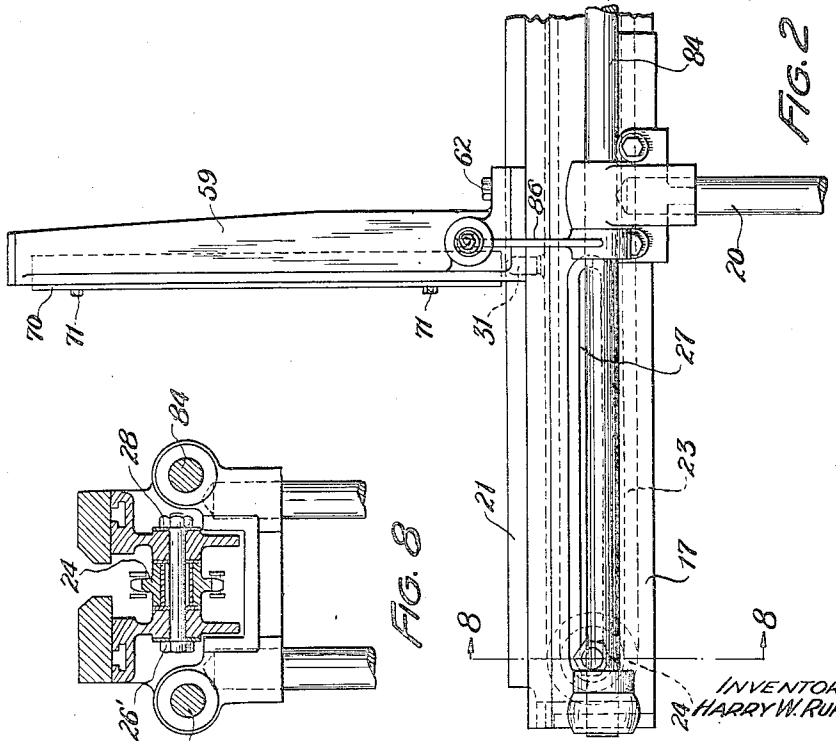

FIG. 8

INVENTOR:
HARRY W. RUPPLE

Kerr, Hudson & Kent
ATTORNEYS

May 1, 1934. H. W. RUPPLE 1,956,999

MAGAZINE FEED FOR SINGLE SPINDLE MACHINES

Filed Sept. 4, 1931 3 Sheets-Sheet 3

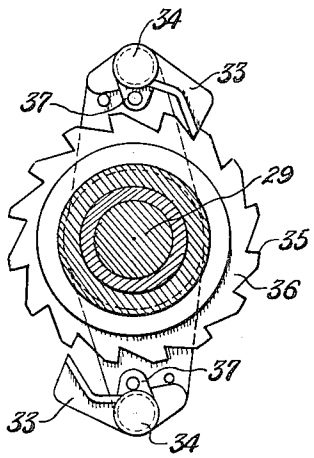

FIG. 5

FIG. 3

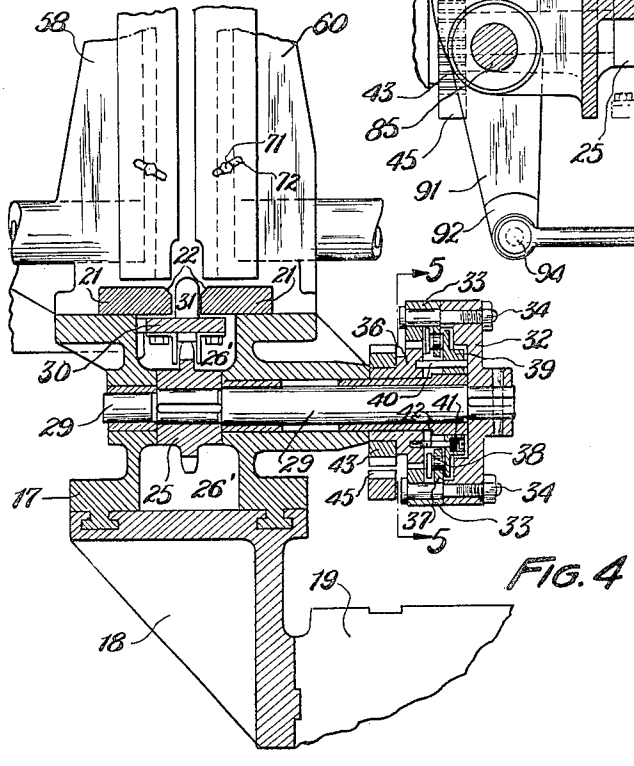

FIG. 4

INVENTOR:
HARRY W. RUPPLE
Lewis Hudson & Kent
ATTORNEYS

Patented May 1, 1934

1,956,999

UNITED STATES PATENT OFFICE

1,956,999

MAGAZINE FEED FOR SINGLE SPINDLE MACHINES

Harry W. Rupple, Shaker Heights, Ohio, assignor to The Cleveland Automatic Machine Company, Cleveland, Ohio, a corporation of Ohio

Application September 4, 1931, Serial No. 561,226

16 Claims. (Cl. 29—60)

The present invention relates to automatic machine tools and more particularly to a magazine stock feed device for machines of the general class wherein the stock or blank to be machined is carried in a rotating spindle, and a number of forming tools carried on reciprocating tool slides are adapted to engage the work during one cycle of movement of the tool slides. In machines of this general character the work is usually produced by automatic operation of forming tools, from bar stock which is automatically fed through the work supporting spindle, and the only attention necessary on the part of the operator is that of supplying a new bar of stock when the one in the machine has been exhausted. The present invention contemplates the provision of a novel means for supplying the stock and feeding it through this type of machine.

An object of the invention is to provide a magazine for holding a quantity of stock or blanks and for automatically feeding the stock or blanks from the magazine to a machine of the general character referred to at specified intervals.

Another object of the invention is to provide a stock or blank magazine and feeding device for machines of the general character referred to, which will automatically and continuously feed stock or blanks from the magazine to the machine without any attention whatsoever on the part of the operator and which will be economic in construction and positive in operation.

Another object of the invention is to provide a stock or blank magazine and feeding device capable of feeding stock or blanks of different lengths and sizes and which may be built into a machine of the type referred to or constructed as a separate unit adapted to be attached to well known machines of the same general character.

Further objects and advantages of the invention will be apparent to those skilled in the art from the following disclosure.

While the principle of the invention may be embodied in various mechanical forms, the preferred embodiment is described in connection with the following drawings, in which:

Figure 1 is a side view of a machine provided with the improved stock magazine and feed device of this invention;

Fig. 2 is an enlarged view of the magazine shown in Fig. 1;

Fig. 3 is a view with parts in section on line 3—3 of Fig. 2;

Fig. 4 is a view with parts in section on the line 4—4 of Fig. 2;

Fig. 5 is an enlarged view with parts in section on the line 5—5 of Fig. 4;

Fig. 6 is a view with parts in section on the line 6—6 of Fig. 2;

Fig. 7 is a plan view of the cam and cam roller shown in Fig. 6; and

Fig. 8 is a view, with parts in section, on the line 8—8 of Fig. 2.

The machine illustrated in Fig. 1 is a well known type of automatic machine, provided with the preferred embodiment of the improved stock magazine and feed devices of this invention. The base of the machine is indicated in general by the reference character 10, and carries on the left-hand end thereof a rotatable work carrying spindle 11 of the type adapted to have a stock bar fed by automatic means through the center thereof. The spindle is of ordinary construction without the conventional feeding means, and may comprise a rotatable sleeve carrying at one end a chuck body 12 adapted to hold the work, and at the other end mechanism indicated in general by the reference character 13 for operating the jaws of the chuck intermittently to grip the stock during the forming operation, and to release it when the feeding mechanism is operating. The work spindle is driven by mechanism not shown. Adjacent the chuck end of the work spindle tool slides 15 and 16 adapted to carry tools for the necessary forming operations are movably mounted on the base 10. The tool slides and turrets are operated through predetermined cycles by cams 16' on the cam shaft 14, as is well known in the art. The elements of the machine above described are well known and the details of construction will be found to vary within wide limits and do not directly form a part of the present invention which relates more particularly to a stock magazine and means for feeding the stock through the machine. The base 17 of the magazine proper is adjustably supported at one end on an angle bracket 18 attached to a horn 19 projecting from the base 10 of the machine, and at the other end is provided with a floor stand 20. The base 17 is of rectangular shape and carries on its top surface removable guide plates 21, provided with guide surfaces 22 adapted to support a piece of stock positioned thereon in alignment with the opening in the work spindle 11. To accommodate different diameters of work the guide plates may be adjustably mounted or plates of different thicknesses employed.

An endless conveyor 23 is supported on two sprocket wheels 24 and 25 carried by the base

17 in opposite ends of a longitudinal opening 26 extending substantially the length of the base. The sprocket wheel 24 is rotatably carried in suitable bearings on a bolt 26' adjustable in slots 27 relative to the base 17 and sprocket wheel 25, so as to accommodate different lengths of conveyors and is held in its adjusted position by a clamp nut 28. The sprocket wheel 25 is keyed to a shaft 29 rotatably mounted in suitable bearings in the base 17. The endless conveyor 23 is provided at predetermined intervals with links 30 carrying projections 31 adapted to extend between the guide plates 21 and engage the rear end of a piece of work positioned thereon. The endless conveyor 23 is adjustable so that the length thereof may be varied and the links 30 positioned at equal intervals to accommodate different lengths of work pieces. A member 32 is keyed to one end of the shaft 29 and carries pawls 33 rotatably mounted on the bolts 34. The pawls 33 engage ratchet teeth 35 on a ratchet wheel 36 rotatably mounted on shaft 29 and are provided with integrally formed arms 37 adapted to carry fiber members 38 frictionally engaged between the ratchet wheel 36 and a member 39 slidably mounted on pins 40 fixed to the ratchet wheel. The member 39 is continuously urged toward the ratchet wheel by compression springs 41 mounted on bolts 42 and positioned in suitable openings in the member 39. The construction is such that as the ratchet wheel is rotated in one direction the pawls are held disengaged and as it is rotated in the reverse direction the pawls are positively engaged.

A gear 43 is non-rotatably carried on the hub of the ratchet wheel 36 and is in mesh with an idler gear 44 rotatably carried by the base 17 of the magazine, see Fig. 2. The gear 44 is in mesh with a rack 45 on one end of a bar 46 carried by a member 47 slidably carried by the base 10 and attached to the right-hand end of a rod 48, as shown in Fig. 1. The rod 48 is slidably supported in suitable bearings in the base 10 which include a journal 49 mounted on the horn 19 projecting from said base. The member 47 carries a roller 50 adapted to engage a cam 51 on a cam roller 52 supported on the cam shaft 14. A weight 54 is attached to the right-hand end of the rod 48 by a cable 55 supported on a pulley 56 carried on an arm 57 projecting from the base 10. The construction is such that the rod 48 is moved to the left, as viewed in Fig. 1, by the engagement of the cam roller 50 with the cam 51, and after the cam roller has passed the high point of the cam the rod is moved in the opposite direction under the action of the weight 54. This movement of the rod 48 produces a similar movement of the rack 45, which, through the pawl and ratchet mechanism and the shaft 29, imparts an intermediate movement in one direction to the endless conveyor 23. The movement of the endless conveyor, by the engagement of the projections 31 with the rear end of the stock pieces carried on the guide surfaces 22, feeds the stock through the machine.

Vertical members 58 and 59 positioned upon the front side of the bed and similar members 60 and 61 positioned on the rear side of the bed are adapted to support a plurality of stock bars W in vertical alignment therebetween and constitute the magazine for the stock. The vertical members 58 and 59 are substantially similar in construction, as are the vertical members 60 and 61. The members 59 and 61 are adjustably mounted upon the top of the base 17 to accommodate different lengths of stock, and are held in adjusted position by means of bolts 62, the heads of which extend in T slots 63 provided in the top of the base 17, as shown in Fig. 3. The members 58 and 60 are also attached to the base 17 by bolts 64 similar to the bolts 62 and may be slightly adjustable on said base. To accommodate stock of different thicknesses the vertical members are provided with adjustable guide plates 70. The plates 70 are T-shape and are clamped to the vertical members by bolts 71 projecting through elongated slots 72, as shown in Figs. 3 and 4.

The stock bars W supported by the vertical members are held from dropping on the guide plates 21 by plungers 73 slidably supported in suitable openings 74 at the base of the vertical members 58 and 59. The plungers 73 are provided with cam surfaces 75 and are held in their engaging position by compression springs 76 mounted on reduced extensions 77 thereof, and held between a shoulder 78 and a member 79 adjustable on the extension 77 by means of the nuts 80. Plungers 81 are slidably mounted in suitable openings 82 in bosses 82' adjustably attached to the vertical members 60 and 61 by bolts extending through elongated slots in the bosses. These plungers 81 are provided with cam surfaces 83 and are adapted to be held in their retracted position by tension springs 83' attached to the plungers 81 and the vertical members. Shafts 84 and 85 are rotatably mounted in suitable journals on the front and rear sides of the base 17, respectively. The shaft 84 carries arms 86 slidably keyed thereto, the projecting ends of which are adapted to engage in elongated slots 87 in the plungers 73. Arms 88 are slidably keyed to the shaft 85 and the projecting ends of these arms are adapted to engage in slots 89 provided in the plunger members 81. The bosses 82 are adjustable to permit the positioning of the plungers 81 so that the end thereof will enter between the work pieces as they are projected into the path of the work. The ends of the arms 88 which engage in the slots 89 are elongated and permit the positioning of the bosses 82' at different vertical positions without interfering with their operation.

Arms 90 and 91 are non-rotatably fixed on the shafts 84 and 85 respectively, and extend below the base 17. The lower ends of these arms are each provided with yoke sections 92. One end of a connecting link 93 is pivoted in the yoke section of the arm 91 by a pin 94 and the other end of the link 93 is adjustably connected to a member 95 pivoted in the yoke section 92 of the arm 90. The length of the slot 87 being greater than the width of the engaging end of the arm 86, a lost motion connection between these two parts is effected permitting rotation of the shaft 84 sufficient to move the plunger 81 between the bottom work piece positioned in the magazine and the one adjacent thereabove, before the plunger 73 is withdrawn to drop the bottom work piece onto the guide surfaces 22 of the base 17.

The links 30 provided at intervals in the endless conveyor above referred to, are provided on one side thereof with a cam surface 100 adapted to engage a cam roller 101 carried on a reciprocating bar 102 slidably mounted in an opening 103 in a projection 104 on one side of the base 17. The bar 102 carries an extension 105 projecting to the right through an opening 106 in the extension 104, see Fig. 2. The extension 105 engages the end of an adjustable screw in an arm 106' fixed on the shaft 84. The construction is

such that as the link 30 approaches the forward end of its movement, the cam surface 100 engages the cam roller 101 moving the bar 102 together with the arm 106' producing rotation of the shaft 84.

The operation of the machine is as follows:

During the engagement of the tools with the end of a stock bar extending through the work spindle to perform their operation thereon, the rod 48 together with the rack 45 is being moved toward the left, as viewed in Fig. 1, under the action of the cam roller 50 on the cam 51. As the rod 48 moves in this direction the pawls 33 move over the ratchet teeth 35 and impart no movement to the endless conveyor 23. After the work of the tools has been completed, they are returned to their original position, the chuck jaws release the stock bar and the cam roller 50 rides over the high point of the cam 51; the rod 48, together with the rack 45, then moves in the reverse direction under the influence of the weight 54. This movement of the rack produces rotation of the gear 43, and through the pawls 33 which now engage the ratchet teeth 35, rotation of the shaft 29 and the sprocket wheel 25. Rotation of the sprocket wheel 25 moves the endless conveyor 23 and, by the engagement of a projection 31 on a link 30 with the stock piece, produces the desired forward feeding movement after which the stock is again clamped and the cycle of operation repeated.

The intermittent feeding motion continues at predetermined intervals and as the links 30 approach the right-hand end of their travel, as viewed in Figs. 1 and 3, a cam surface 100 engages the cam roller 101, on the plunger 102, and rotates the shaft 84 together with the shaft 85 connected thereto, in a clockwise direction as viewed in Figs. 3 and 6. The initial rotation of these shafts moves the plungers 81 to a position between the bottom stock piece and the piece immediately thereabove without producing movement of the plungers 73 because of the lost motion connection between the arms 86 and the plungers 73. Continued rotation of the shafts 84 and 85 brings the projecting end of the arm 86 into engagement with the right-hand end of the slot 87, as viewed in Fig. 3, and withdraws the plungers 73 from beneath the bottom stock piece permitting it to drop upon the guide surfaces 22 in advance of the next following projection 31. After the high point of the cam surface 100 is passed, the plungers 73 and 81 are returned to their original positions by the springs 76 and 83'.

The stock magazine and feed mechanism, as illustrated in the drawings, is shown applied to a machine well known in the art, with slight changes in the conventional feed means employed, but it is understood that the invention contemplates the construction wherein the stock magazine and feed mechanism is built as an integral part of the machine, the entire assembly being supported on a single base, etc. The embodiment of the invention described and illustrated is merely the preferred form, and I do not wish to be limited to the particular construction shown which may be varied within the scope of the invention, and particularly point out and claim as my invention:

I claim:

1. A work feed device for a machine tool of the character described, comprising a base, guide plates on the top of said base adapted to support a work piece, an endless conveyor carried by said base and adapted to move a work piece positioned on said guide plates longitudinally of said bed, vertical members projecting from said base adapted to support a plurality of work pieces, and means for feeding one of the work pieces supported by said vertical members to the guide plates on said base at predetermined intervals.

2. A work feed device for a machine tool of the character described, comprising a base adapted to be supported at one end by a machine tool, guide surfaces on said base adapted to support a work piece, members rotatably supported in opposite ends of said base, an endless conveyor carried on said members and provided at intervals with projections adapted to engage a work piece positioned on said guide surfaces, and means adapted to be operatively connected to a machine for rotating one of said members to feed a work piece positioned on said guide surfaces to the machine.

3. A work feed device for a machine tool of the character described, comprising a base adapted to be supported at one end by a machine tool, guide surfaces on said base adapted to support a work piece, members rotatably supported in opposite ends of said base, an endless conveyor carried on said members and provided at intervals with projections adapted to engage a work piece positioned on said guide surfaces, means for rotating one of said members to feed a work piece positioned on said guide surfaces to a machine, said means including a one-way drive device, the driven part of which is connected to said member and the driving part of which is adapted to be operatively connected to the machine.

4. A work feed device for a machine tool of the character described, comprising a base adapted to be supported at one end on a machine tool and at the other end provided with a floor stand, guide plates on the top of said base adapted to slidably support a work piece, sprocket wheels carried in said base at opposite ends thereof, an endless conveyor carried on said sprocket wheels and provided at intervals with projections adapted to engage a work piece positioned on said guide plates, means for intermittently rotating one of said sprocket wheels to feed a work piece positioned on said guide plates to a machine, said means including a one-way drive device adapted to be operated in one direction by a part of the machine and in the other direction by a weight, upright members on said base adapted to support a plurality of work pieces in a vertical position, means for permitting the bottom work piece positioned between said upright members to drop upon said guide plates at predetermined intervals, and means for restraining the remainder of the work pieces.

5. In a machine of the character described, the combination of a base, a work holding chuck supported by said base, a movable member on said base adapted to support a tool, members projecting from said base adapted to support a quantity of work pieces, adjustable guide plates on said base adapted to support a work piece in alignment with said chuck, automatic means for feeding work pieces supported by said members one at a time to said guide plates at predetermined intervals, and means for feeding a work piece positioned on said guide plates to said chuck.

6. In a machine of the character described, the combination of a base, a chuck mounted on said base adapted to hold a work piece, a member supported on said base adapted to carry a tool, guide

surfaces on said base adapted to support a work piece in alignment with said chuck, an endless conveyor carried by said base and provided with projections adapted to engage a work piece positioned on said guide plates, and means operatively connected to the main drive of said machine for moving said endless conveyor and feeding a work piece to said chuck.

7. In a machine of the character described, the combination of a base, a chuck mounted on said base adapted to hold a work piece, a member supported on said base adapted to carry a tool, guide surfaces on said base adapted to support a work piece in alignment with said chuck, an endless conveyor carried by said base and provided with projections adapted to engage a work piece positioned on said guide plates, means operatively connected to said machine for moving said endless conveyor and feeding a work piece to said chuck, vertical members supported on said base adapted to support a plurality of work pieces, and means for feeding work pieces supported by said vertical members to said guide surfaces.

8. In a machine of the character described, the combination of a base, a chuck mounted on said base adapted to hold a work piece, a member supported on said base adapted to carry a tool, guide surfaces on said base adapted to support a work piece in alignment with said chuck, an endless conveyor supported in said base and provided with projections adapted to engage a work piece positioned on said guide plates, means operatively connected to the drive for said machine for moving said endless conveyor and feeding a work piece to said chuck, vertical members supported on said base adapted to support a plurality of work pieces in vertical alignment, upper and lower plungers carried by said vertical members adapted to be positioned in the path of the work pieces supported in said vertical members, means for moving the upper plungers into a position between the bottom work piece carried on said vertical members and the one adjacent thereto, and means for withdrawing the bottom plungers from beneath the lower work piece supported by said vertical members whereby the work blanks are fed one at a time to the guide surfaces on said base.

9. In a machine of the character described, the combination of a base, a chuck mounted on said base adapted to hold a work piece, a member supported on said base adapted to carry a tool, guide surfaces on said base adapted to support a work piece in alignment with said chuck, an endless conveyor supported in said base and provided with projections adapted to engage a work piece positioned on said guide plates, means operatively connected to a drive for said machine for moving said endless conveyor and feeding a work piece to said chuck, vertical members supported on said base adapted to support a plurality of work pieces in vertical alignment, upper and lower plungers carried by said vertical members adapted to be positioned in the path of the work pieces supported in said vertical members, means operatively connected to said endless conveyor for moving the upper plungers into a position between the bottom work piece carried on said vertical members and the one adjacent thereto, and means for withdrawing the bottom plungers from beneath the lower work piece supported by said vertical members whereby the work blanks are fed one at a time to the guide surfaces on said base.

10. In a machine of the character described, the combination of a base, a cam shaft supported on said base, a chuck carried on said base and through which a work piece is adapted to be fed, a movable member supported on said base adapted to carry a tool and be moved from said cam shaft, guide surfaces on said base adapted to support a work piece in alignment with said chuck, and an endless conveyor operatively connected to said cam shaft for feeding a work piece positioned on said guide surfaces through said chuck at predetermined intervals.

11. A blank magazine for an automatic machine tool comprising means adapted to support a plurality of work blanks in tandem relationship, a member normally positioned in the path of said blanks below the bottom blank in said magazine, a second member normally positioned to one side of the path of said blanks but adapted to be projected into the path of the blanks above the bottom blank in said magazine, means adapted to move said second member into the path of said blanks, means adapted to withdraw the first mentioned member from the path of said blanks after said second member has moved into the path of the blanks, and means for adjusting said members relative to each other.

12. A blank magazine for an automatic machine tool comprising means adapted to support a plurality of work blanks in tandem relationship, a lineal reciprocable member normally positioned in the path of said blanks below the bottom blank in said magazine, a second member adapted to be projected into the path of the blanks above the bottom blank in said magazine, means adapted to move said second member into the path of said blanks, and means adapted to withdraw the first mentioned member from the path of said blanks after said second member has moved into the path of the blanks.

13. A blank magazine for an automatic machine tool comprising a base, adjustable projecting members supported by said base and adapted to support a plurality of blanks in tandem relationship therebetween, bosses supported by said members, means for adjusting one of said bosses relative to the other, plungers reciprocably supported in said bosses, means for reciprocating said plungers whereby they are projected into and withdrawn from the path of the blank, said last mentioned means including levers pivotally supported by said base, and means for operating said levers in predetermined timed relationship.

14. A work feed device for a machine tool of the character described, comprising a base, a guide surface on said base adapted to support a work piece, means carried by said base for feeding a work piece positioned on said guide surface to a machine tool, projections on said base adapted to support a plurality of work pieces in tandem relationship, a member normally positioned in the path of said blanks below the bottom blank in said magazine, a second member adapted to be projected into the path of the blanks above the bottom blank in said magazine, means adapted to move said second member into the path of said blanks, means adapted to withdraw the first mentioned member from the path of said blanks after said second member has moved into the path of the blanks, and means for adjusting said members relative to each other.

15. A work feed device for a machine tool of the character described, comprising a base, a guide surface on said base adapted to support a work piece, means carried by said base for feed-

ing a work piece positioned on said guide surface to a machine tool, means on said base adapted to support a plurality of work pieces in tandem relationship, a lineal reciprocable member normally positioned in the path of said blanks below the bottom blank in said magazine, a second member adapted to be projected into the path of the blanks above the bottom blank in said magazine, means adapted to move said second member into the path of said blanks, and means adapted to withdraw the first mentioned member from the path of said blanks after said second member has moved into the path of the blanks.

16. A work feed device for a machine tool of the character described, comprising a base, a guide surface on said base adapted to support a work piece, means carried by said base for feeding a work piece positioned on said guide surface to a machine tool, projections on said base adapted to support a plurality of work pieces in tandem relationship, bosses supported by said projections, means for adjusting one of said bosses relative to the other, plungers reciprocably supported in said bosses, means for reciprocating said plungers whereby they are projected into the path of the blank and withdrawn therefrom, said last mentioned means including levers pivotally supported by said base, and means for operating said levers in predetermined timed relationship.

HARRY W. RUPPLE.