United States Patent

Barnes

[15] **3,649,011**

[45] **Mar. 14, 1972**

[54] NET SHEATH

[72] Inventor: **Paul J. Barnes,** 780 E. Baptist Assembly Road, Colorado Springs, Colo. 80908

[22] Filed: **Feb. 13, 1970**

[21] Appl. No.: **11,111**

[52] **U.S. Cl.** ..... **273/29 B**

[51] **Int. Cl.** **A63b 61/00**

[58] **Field of Search** ..... 273/29 B, 29 R; 5/110, 135

[56] **References Cited**

UNITED STATES PATENTS

1,994,092	3/1935	Appleyard	273/29 R X
2,495,482	1/1950	Rogatz	5/110 X
2,073,182	3/1937	Scherer	273/29 R X
2,518,702	8/1950	Malcolm, Jr.	273/29 B
1,116,554	11/1914	Boggis	273/29 B

Primary Examiner—Richard C. Pinkham
Assistant Examiner—Theatrice Brown
Attorney—Van Valkenburgh and Lowe

[57] **ABSTRACT**

A sheath for a standard game net to reinforce the lower edge of the net. The sheath is formed as a folded web of cloth adapted to be fitted about the lower cord of a game net with the folds being held together by snaps. The sheath includes a passageway wherein a cable is threaded for stretching the net. The sheath structure includes further, a pocketlike cover for each end of this net and a spacer bar in this pocket adapted to be secured to the standard upper cable of the net and the lower cable of the sheath to hold the cables in a proper spaced-apart position.

7 Claims, 13 Drawing Figures

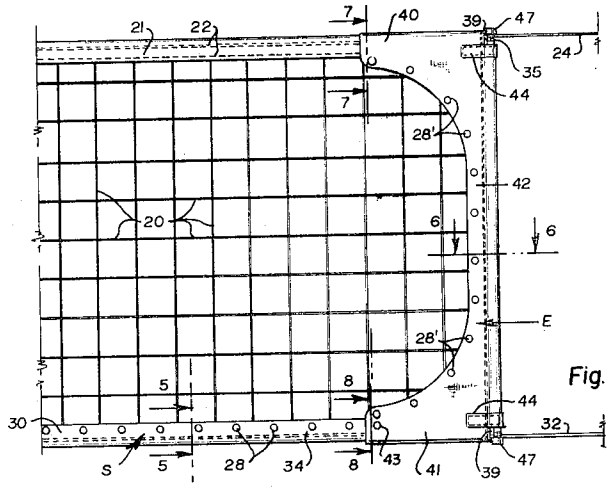

Fig. 4

Patented March 14, 1972 3,649,011

3 Sheets-Sheet 1

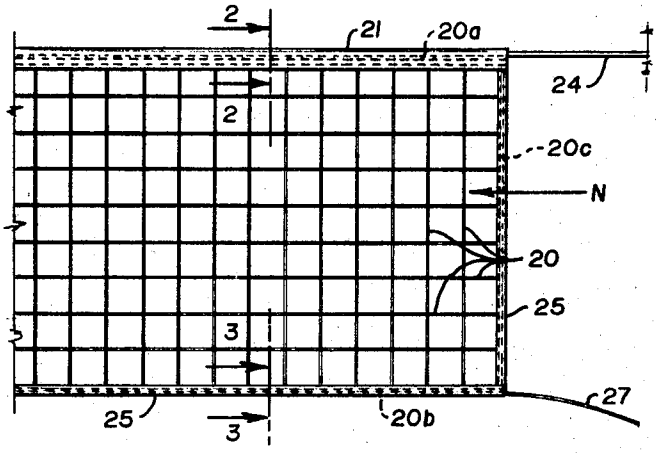

Fig. 1

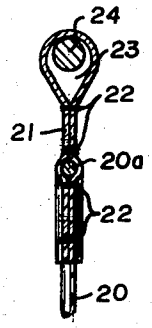

Fig. 2

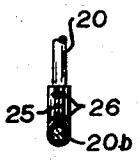

Fig. 3

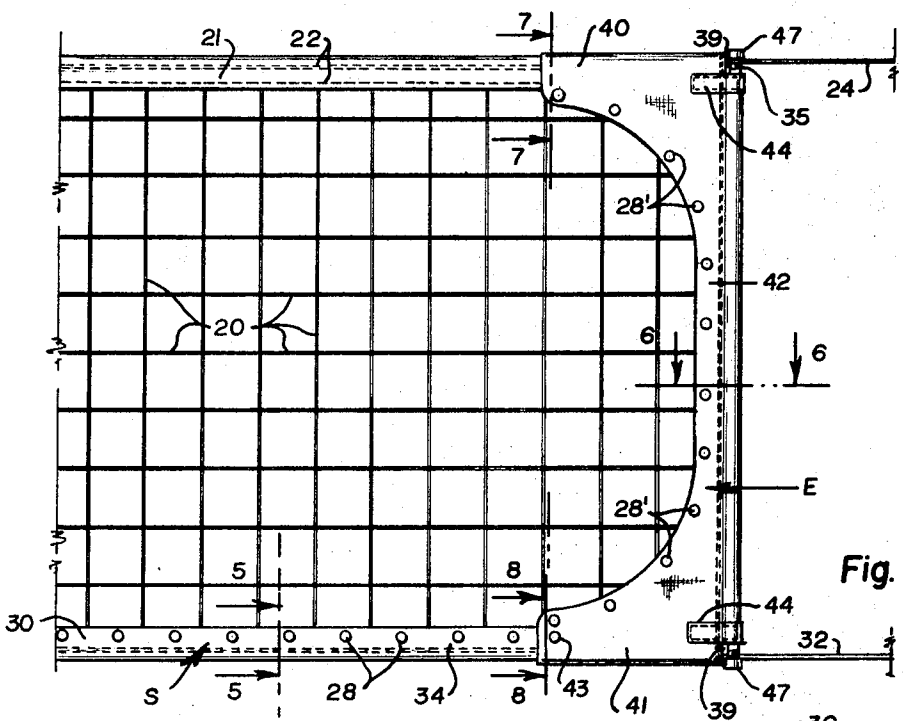

Fig. 4

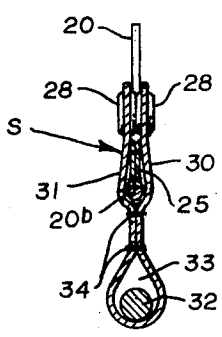

Fig. 5

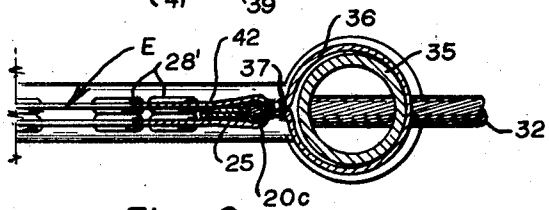

Fig. 6

INVENTOR.

Paul J. Barnes

BY Van Valkenburgh & Lowe

ATTORNEYS

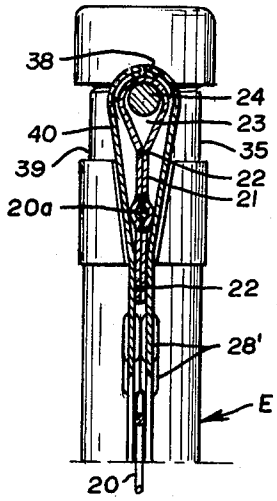

Fig. 7

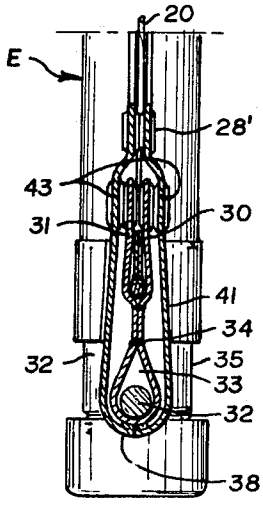

Fig. 8

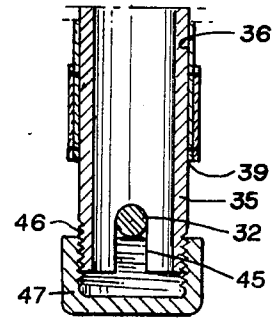

Fig 9

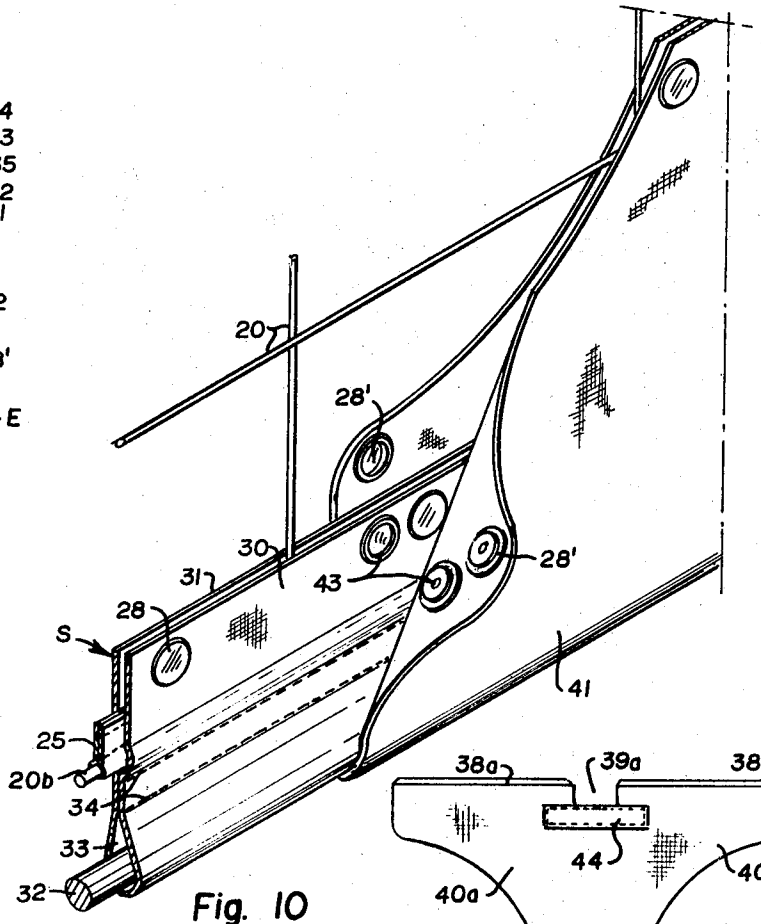

Fig. 10

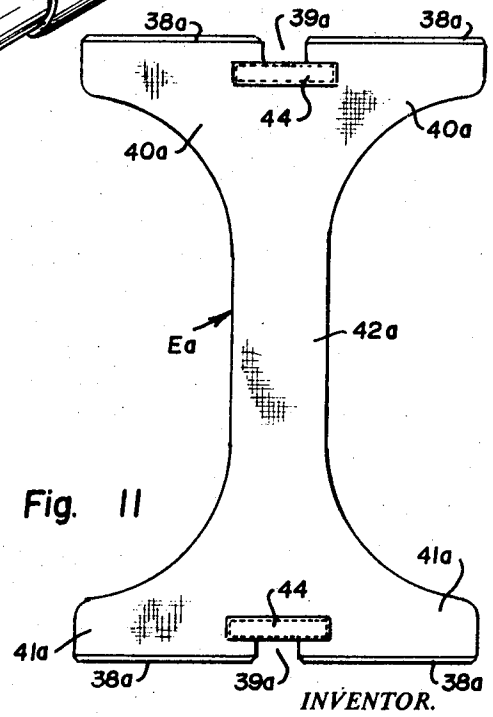

Fig. 11

INVENTOR.

Paul J. Barnes

BY

Van Valkenburgh & Lowe

ATTORNEYS

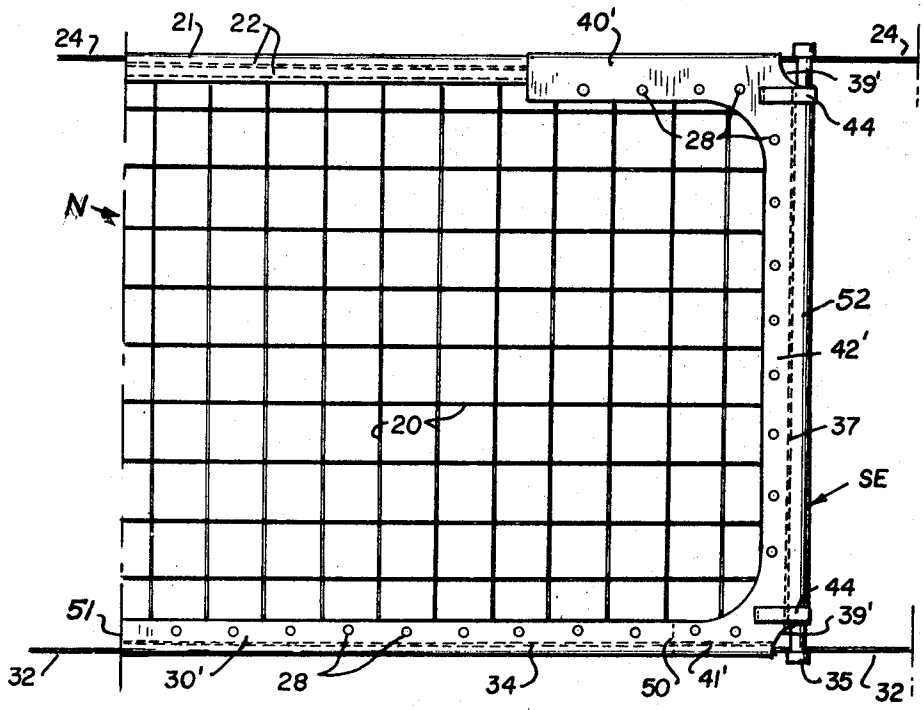

Fig. 12

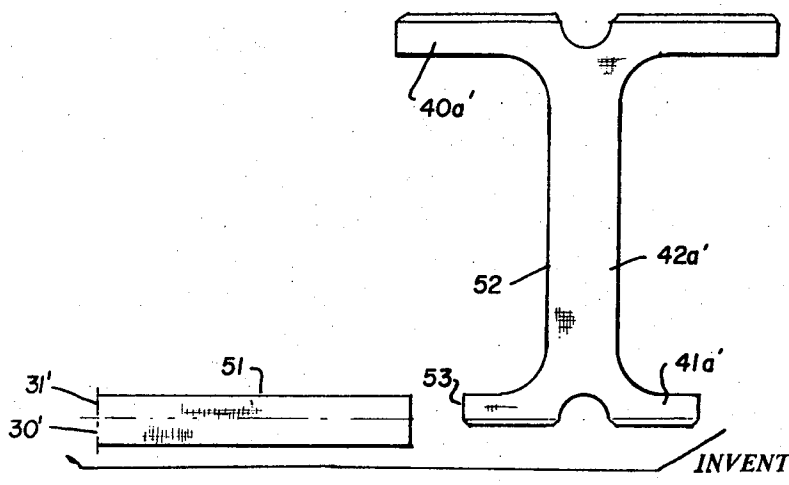

Fig. 13

INVENTOR.

Paul J. Barnes

BY Van Valkenburgh & Lowe

ATTORNEYS

NET SHEATH

The present invention relates to game nets for volleyball, tennis and the like, and more particularly to cable constructions for tightly stringing a net between its mounting posts.

Certain types of game nets, such as for volleyball, are necessarily suspended on cables stretched between the side posts, and preferably in a manner which holds both the top and the bottom edges of the net tightly and securely. Several types of commercial nets are available and high quality, high priced nets provide sewn canvas sheaths at the top and bottom edges of the net having cables threaded through these sheaths to connect the net to its mounting posts. This provision for sheaths at both the top and bottom of the net becomes quite expensive, substantially increasing the cost of a net. As a result, net manufacturers produce a more economical type of a net which provides for a sheath and cable at the top of the net only, and rely upon using the bottom cord of the net itself for stretching the lower portion of the net taut and holding it in place. This expedient is often unsatisfactory for the lower cord of the net does not have much strength. Not only is it apt to break, but also, it cannot effectively stretch the net and it is difficult to hold the ends of the net taut. Such a net is especially unsatisfactory for games such as volleyball.

The present invention was conceived and developed with the above considerations in view and comprises in essence, a removable sheath and cable combination for the bottom edge of a net and a spacer arrangement at the end of a net for use with low cost types of nets which are commercially provided with a sheath and cable only at the upper edge thereof. Also, the invention further contemplates a removable sheath which may be used at the top edge of a net, as well as at the bottom edge, by providing a removable sheath and cable combination at both the top and bottom of the net.

An object of the invention is thus to provide a novel and improved sheath for holding the bottom edge of a net and a cable within the sheath to permit the sheath and lower portion of the net to be tightly secured between net-supporting side posts.

Another object of the invention is to provide a novel and improved sheath and cable combination for holding and stretching a net, which includes end support members between the upper and lower net cables to securely hold the ends of the net taut with the top and bottom edges of the net being properly spaced apart.

Another object of the invention is to provide a novel and improved net sheath which is easily attached to a conventional, low cost net and is easily removed from the net when it is worn or broken, and as easily placed upon a new net.

Another object of the invention is to provide a pair of novel and improved net sheaths which may be used with unbound netting to hold the upper and lower edges of the netting to thus provide a very economical, low cost game net.

Other objects of the invention are to provide an improved net sheath structure which is a simple, low cost, neat appearing, rugged and durable unit, capable of being used with various types of nets.

With the foregoing and other objects in view, my present invention comprises certain constructions, combinations and arrangements of parts and elements as hereinafter described, defined in the appended claims and illustrated in preferred embodiment by the accompanying drawing in which:

FIG. **1** is a small scale elevation view of one end of a conventional low cost type of net having its upper edge only carried by a sheathed cable extending through it for attachment to an end post.

FIG. **2** is a fragmentary sectional detail as taken from the indicated line **2—2** at FIG. **1**, but on an enlarged scale.

FIG. **3** is a fragmentary sectional detail as taken from the indicated line **3—3** at FIG. **1**, but on an enlarged scale.

FIG. **4** is an elevational view of one end of a net, similar to FIG. **1**, but on an enlarged scale and with a removable sheath connecting with the lower edge of the net and with an end cover securing and spacing the end of the net.

FIGS. **5**, **6**, **7**, **8** and **9** are each fragmentary sectional details as taken from the respective indicated lines **5—5**, **6—6**, **7—7**, **8—8** and **9—9**.

FIG. **10** is a perspective view of a fragment of the cover net sheath and the end cover, as at the lower edge of the net with a corner of the end cover folded back to show constructions otherwise hidden from view.

FIG. **11** is a layout view of the end cover before it is folded and sewn into a pouchlike member.

FIG. **12** is an elevational view of one end of a net, similar to FIG. **4**, but showing a modified construction which combines a removable sheath and end cover into a single unit.

FIG. **13** is a layout view of the end cover and a portion of the sheath web of the construction shown in FIG. **12**.

Referring more particularly to the drawing, the conventional net N shown at FIG. **1** is made of horizontal and vertical cords **20** connected or woven together in a characteristic, reticulated form. The top edge of the net, shown in section at FIG. **2**, is enclosed in a tubular sheath **21**, formed by lapping a cloth web about the upper cord **20***a* of the net and stitching the same in place as at **22**, with a tubular passageway **23** through the web at the fold. The web, of a rugged canvaslike material, is preferably woven to a selected width so the edges will not fray, however, if necessary, the edges of the web may be tucked and then stitched to prevent such fraying. A steel cable **24** is passed through the passageway **23** to extend from opposite ends thereof for connection with a side post, not shown, in any conventional manner.

Each end of the net and the bottom cord **20***b* thereof are embraced in a narrow, lightweight cloth web **25**, shown in section at FIG. **3**, which is folded and stitched as at **26**. However, this web **25** has no purpose except to provide a visible edging about the lower cord of the web and to protect the lower cord to a slight degree against breakage or abuse. Ordinarily, the net will be provided with a short reach **27** of the lower cord **20***b* extending from this trim so that it may be tied onto a post or to another cord. However, as stated above, the strength of this cord is not sufficient to permit it to be pulled tightly to hold the lower edge of the net in position.

The improved net covering, as shown at FIGS. **4** to **12**, includes a lower cord sheath S which extends along the entire reach of the net although only one end of the sheath is shown at FIG. **4**. It includes also a short, U-shaped end cover E at each end of the net. Both the lower cord sheath and the end covers are made of heavy, strong canvas, or like material, which is tough and capable of taking considerable abuse. The three members are each folded to lap over the bottom and end cords of the net and are conveniently fastened about the net cords by snaps **28** as will be described.

The sheath S is formed as a web approximately 4 inches wide. This sheath is folded at its longitudinal center to form two flaps **30** and **31** which are joined together by an array of snaps **28**. A cable **32** is placed in the crotch of this fold and into a passageway **33** formed by longitudinal stitching **34** along the surface of the lapping flaps near the fold center to limit the size of the passageway so that the cable **32** snugly fits therein. The flaps **30** and **31** extend beyond this stitching to lie in spaced opposition to each other, and to be spread apart by opening the snaps **28** to receive the lower cord of a net. The snaps **28** are conventional two-piece mating members with each component being fixed in the cloth web near its outer edge **35** at suitable spacings, such as 6 inches, and which will miss the vertical net cords. The snap components are further arranged to register with each other whenever the sheath is affixed to the lower edge of a net and the flaps **30** and **31** are folded together.

The connection of the sheath S to the lower edge of the net may be accomplished in several ways. A preferred way of connection, however, is to first stretch the upper cable **24** between two posts, such as the net holding posts at the sides of a playing field. Next, the cable **32** is stretched between the posts just below the lower edge of the net to place the sheath S carried by this cable at the bottom of the net. The flaps **30** and

31 of the sheath are then opened, the lower edge of the net covered by the folded web 25 is placed between the flaps, and the flaps are closed and secured by the snaps 28. An end cover E is then mounted upon each end of the net to hold the end of the net in place and to properly space the cables 24 and 32, a spacer pipe 35 being provided in each end cover for this purpose.

The end cover E is a sheet of folded canvas or like material to form overlapping portions thereto. The spacer pipe 35 is at the fold, the pipe being fitted into a passageway 36 formed by stitching 37 adjacent to and parallel with the fold of the sheet. The ends of the lapped portions extending beyond the passageway are sewn together as by stitching 38, FIGS. 7 and 8. Accordingly, the cover forms a pocket whereinto an end of the net is fitted. The cables 24 and 32 must extend through the upper and lower corners of the pocket of each end cover and notches 39 are provided at these corners to permit an easy passage of the cables as illustrated. Also, the ends of the spacer pipe 35 extend from the passageway 36 at these notches 39 to connect with the cable as will be described.

Each lapping portion of the cover is formed the same as the other and this cover is C-shaped in appearance with an upper arm portion 40 of the pocket being adapted to fit about the end of the upper sheath 21, a lower arm portion 41 being adapted to be fitted about the end of the lower edge sheath S and a narrower center portion 42 being adapted to fit over the web-covered end cord 20*c* of the net. An array of mating snaps 28′ is provided on each lapped portion of the cover, and about the opening of this pocket, as illustrated at FIG. 4, to hold the end cover in place. The snaps are spaced between the net strands and also the arm portions 40 and 41 are of sufficient width to overlap the respective sheaths 21 and S to provide clearance to permit the mating snaps to be joined.

The mating components of a pair of interconnecting snaps 43 may be located on the flaps of the sheath S and on the lapping portions of the arm portion 41 as best illustrated at FIGS. 8 and 10. These snaps 43 will thus interconnect the end cover E and the lower cord sheath S.

FIG. 11 illustrates a pattern for forming an end cover E which is cut from stock material as a symmetrical unit having opposing upper arm portions 40*a*, lower arm portions 41*a* and a narrower central portion 42*a*. Also there is provided notch cutouts 39*a* and lapping edge portions 38*a* at the ends of the arm portions 40*a* and 41*a* to provide edging for the stitching 38 when the pattern is folded together. The opposite exposed edges of the arm portion and the central portion of this pattern are not shown as being finished in any manner, however, they may be tucked and sewn to prevent raveling, or finished in any suitable manner. A pad 44 is provided at the base of each notch 39*a* and is formed as an elongated strip stitched to the face of the pattern to reinforce the edge portion of the notch wrapped about the spacer pipe 35.

The spacer pipe 35 is a rigid, lightweight pipe adapted to hold the upper cable 24 and the lower cable 32 in a proper spaced-apart position at the end of the net and to prevent the net from being distorted in any manner. To positively secure these cables to the spacer pipe, each end of the spacer pipe is notched as at 45 to receive the cable. Likewise, each end of the pipe is threaded as at 46 to receive a cap 47 which is turned onto the threaded portion to butt against the cable.

In fixing each end cover to the net, the first step is to thread the upper and lower cords 24 and 32 through the end cover notches 39 to fit the end cover upon the cables before securing the cables to the mounting posts. Thereafter, the lower cord sheath S is affixed to the bottom of the net as heretofore described. Each end cover is then pulled over the end of the net. So fitted, the snaps 28′ and 43′ are connected together to secure the end cover in position. The spacer pipe is then fitted upon the cables 24 and 32 with the cables lying in the notches 45 and finally, the caps 47 are turned upon the cables to lock the pipe in position upon these cables and to complete the mounting operation. Once the end covers and sheath are affixed in position upon a net, they may remain so even though the net is dismounted from its post and rolled up or otherwise folded for storage. After the net has been in use for a period of time and is torn or otherwise damaged to the point where replacement is needed, the end covers E and the sheath may be easily removed and replaced upon another net section.

The construction illustrated at FIGS. 12 and 13 provides for a unitary sheath-end-cover combination SE. As in the construction previously described, this sheath-end-cover SE is used with a conventional net N made of cords 20, having a tubular sheath 21 at its top and a steel cable 24 through the sheath. The lower cord of the net is enclosed in a sheath of the unit SE, formed as a web 51 folded to flaps 30′ and 31′, and these flaps are joined together by snaps 28. A cable 32 is fitted into a passageway at the base of the fold, formed by stitching 34 as heretofore described.

The end cover portion of the unit SE is a folded sheet 52 forming overlapping portions which are secured together by snaps 28. A spacer pipe 35 is at the fold and is fitted into a passageway by stitching 37. The ends of this portion are stitched together as at 38 (see FIG. 7), to provide a pocket whereinto the net is fitted. Notches 39′ are provided wherethrough the net cables extend and are reinforced by pads 44 as illustrated. This end cover portion is formed with an upper arm 40′ to fit about the end of the upper sheath 21 and a lower arm 41′ which joins the flaps 30′ and 31′ of the sheath portion of the unit SE by transverse stitching 50.

The unit shown at FIGS. 12 and 13 may be formed by various patterns of canvas. The pattern illustrated at FIG. 13 is exemplary of one type suitable for use. The web 51 is used to form the sheath portion and is folded longitudinally to define flaps 30′ and 31′. A cut canvas sheet 52, similar to the construction at FIG. 11, forms the end cover portion with arm portions 41*a*′ having the ends 53 abutting the end of the web 51 to provide stitching 50. Naturally, variations of form and structure are possible, and in the form illustrated at FIG. 12, the manner of applying the same to a net is the same as that heretofore described.

Other variations are possible, one obvious variation being to use unprepared netting, that is a net which does not have a top edge sheath such as 21. Such netting, without the sheath, is a comparatively low cost material and it is within the contemplation of the present invention to provide not only a removable lower cord sheath, but also an upper cord sheath of the same basic construction as the lower cord sheath hereinbefore described. Still other variations of construction are possible which are within the scope and spirit of the present invention. Hence, I desire that my protection be limited, not by the constructions illustrated and described, but only by the proper scope of the appended claims.

I claim:

1. In combination with a rectangular game net having edge cords at the top and bottom, end cords at each end thereof, and top and bottom suspension cables connected to the top and bottom edge cords respectively, a net sheath adapted to embrace the edges of the net and comprising:

a. a web, having a length the length of the net, folded upon its longitudinal axis as a pair of opposing flaps embracing the top edge cord and the top cable, and disconnectable means connecting the flaps together to form a top sheath member at the top of the net;

b. a web, having a length the length of the net, folded upon its longitudinal axis as a pair of opposing flaps embracing the bottom edge cord and the bottom cable, and disconnectable means connecting the flaps together to form a bottom sheath member at the bottom of the net;

c. a web, having a length the height of the net, folded upon its longitudinal axis as a pair of opposing flaps, embracing an end cord at one end of the net and disconnectable means connecting the flaps together to form an end sheath member at the end of the net; and

d. an arm portion outstands from one end of the end sheath member and embraces the adjacent edge of the net and the sheath thereon.

2. In the net combination defined in claim 1, wherein arm portions outstand from the top and bottom of the end sheath member and embrace the top and bottom edges of the net and the top and bottom sheaths thereon.

3. In the net combination defined in claim 1, including a pocketlike opening at each end of the end sheath member wherethrough the cable extends.

4. In the net combination defined in claim 1, including means adapted to interconnect the arm portion and net sheath.

5. In the organization defined in claim 1, including:

a longitudinal stitching adjacent to the fold of the lap portions forming the end sheath to provide a tubular passageway therethrough; and

a spacer bar extending through said passageway adapted to engage the upper and lower cables supporting the net to hold the same in a fixed, spaced-apart position.

6. In the organization defined in claim 1, wherein locking means are provided at each end of the cable to secure the same in position.

7. In the net combination defined in claim 1, wherein one end sheath and the edge sheath are shown together as a unitary member.

* * * * *