Sept. 6, 1955 J. O. E. DIETERICH 2,717,158

RANDOM SELECTOR FOR AMUSEMENT DEVICE OR THE LIKE

Filed May 14, 1952 3 Sheets-Sheet 1

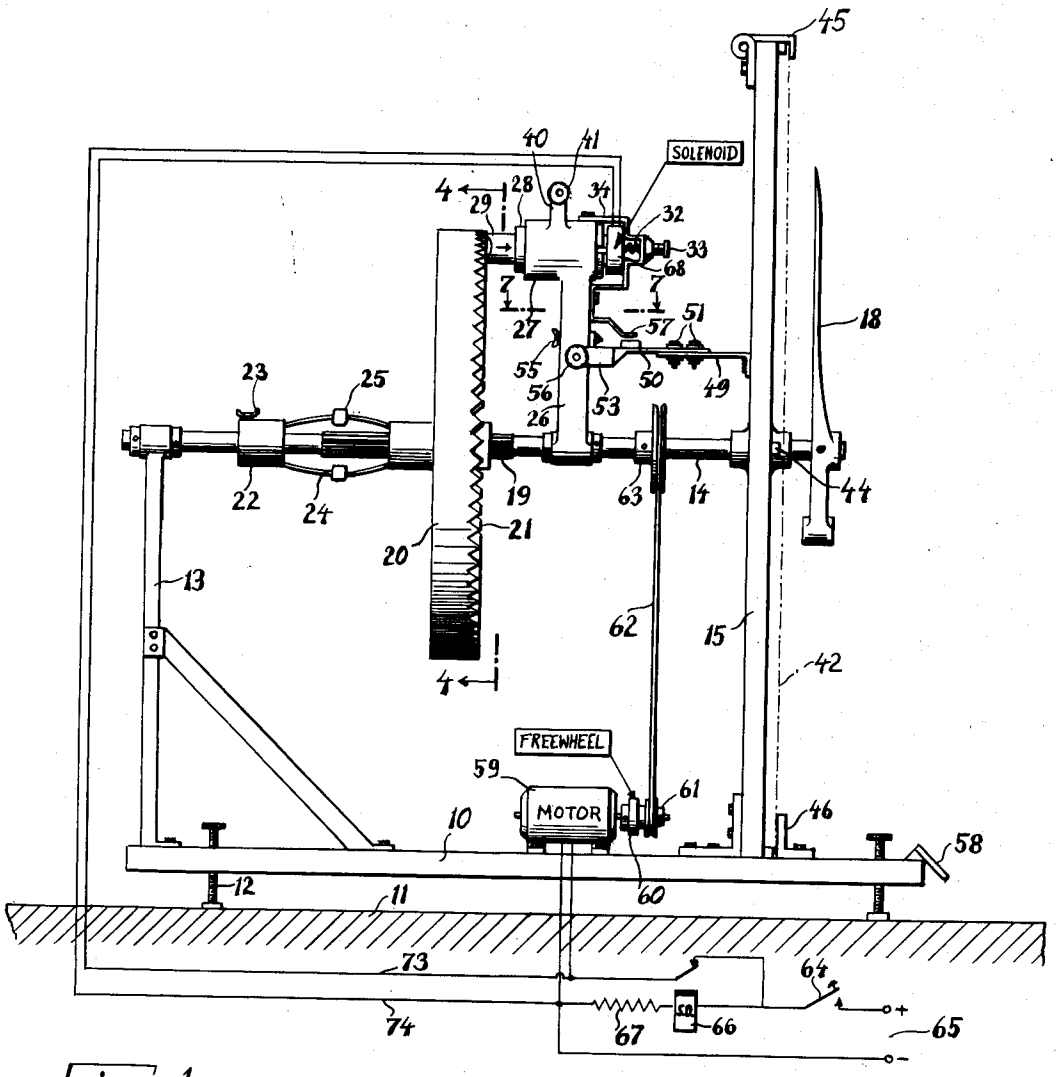

Fig. 1

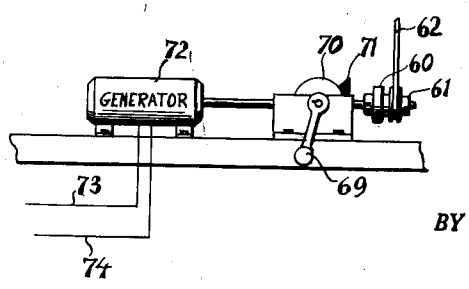

Fig. 9

INVENTOR:
JOSEPH O. E. DIETERICH

BY

Earl F. Ross
AGENT

Sept. 6, 1955 J. O. E. DIETERICH 2,717,158

RANDOM SELECTOR FOR AMUSEMENT DEVICE OR THE LIKE

Filed May 14, 1952 3 Sheets-Sheet 2

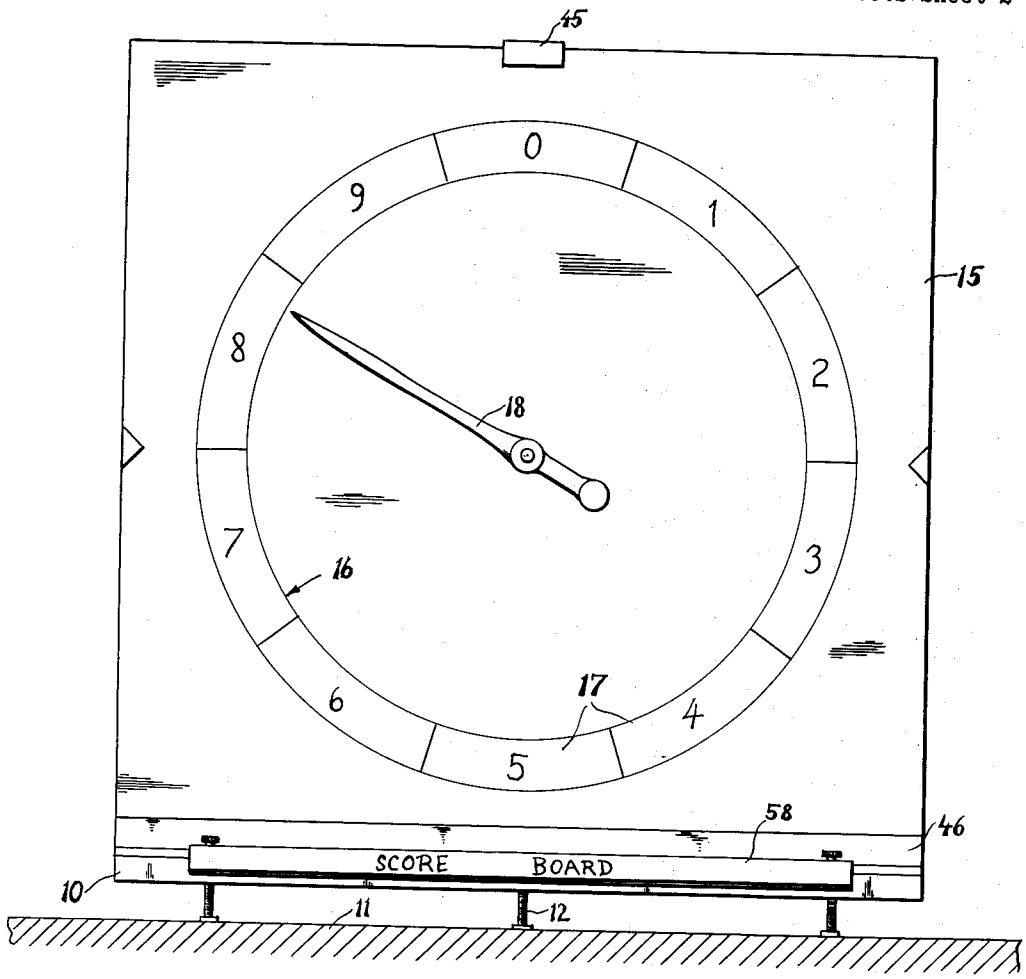

Fig. 2

Fig. 4

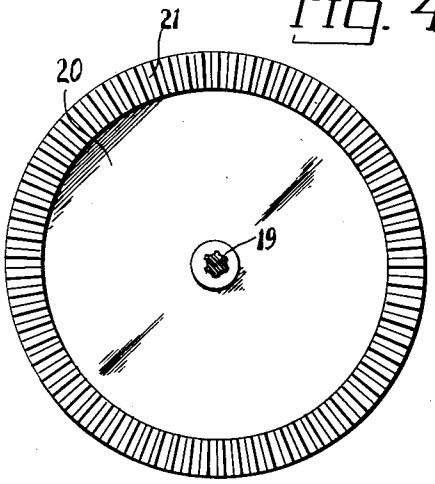

Fig. 8

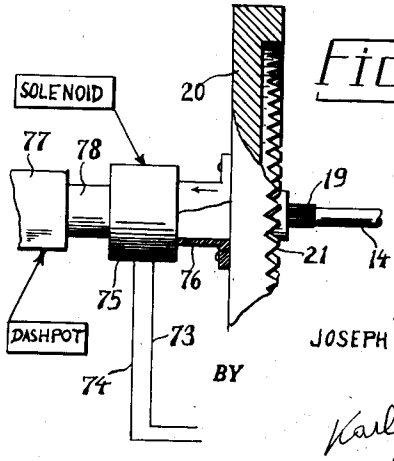

INVENTOR:
JOSEPH O. E. DIETERICH

BY

Karl F. Ross
AGENT

Sept. 6, 1955 J. O. E. DIETERICH 2,717,158

RANDOM SELECTOR FOR AMUSEMENT DEVICE OR THE LIKE

Filed May 14, 1952 3 Sheets-Sheet 3

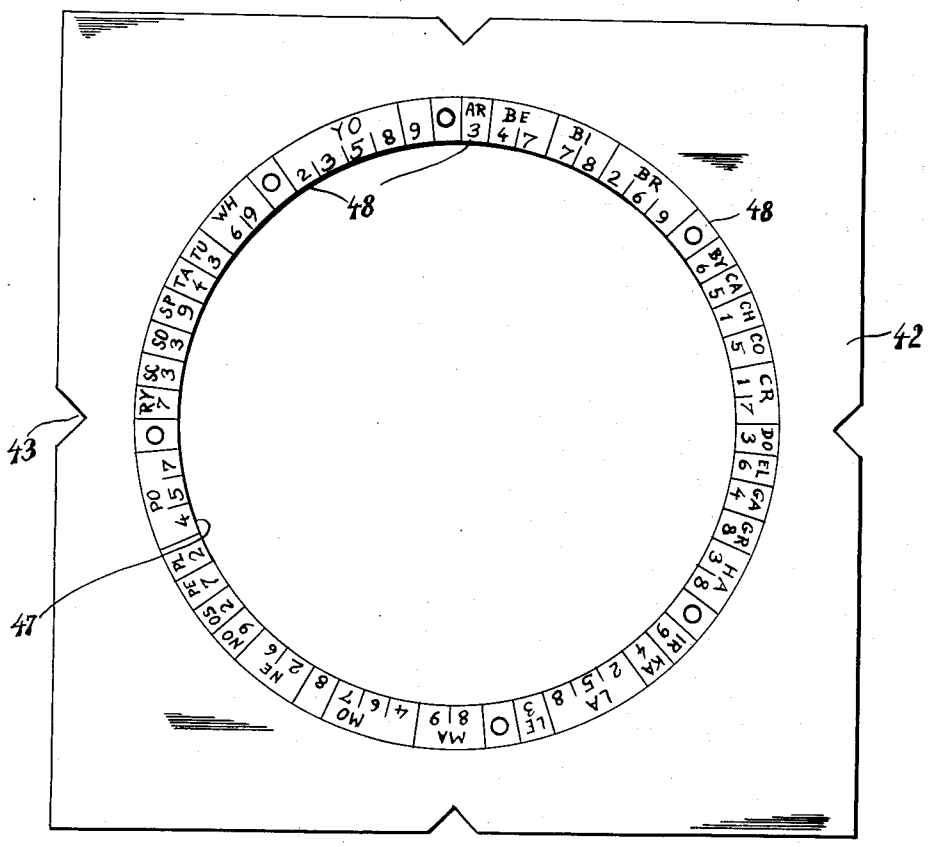

Fig. 3

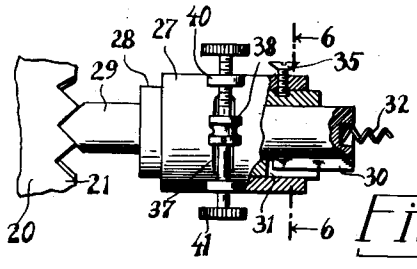

Fig. 5

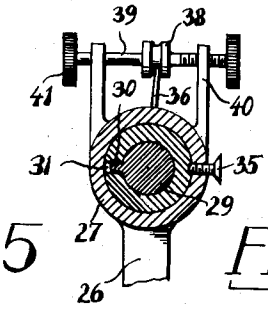

Fig. 6

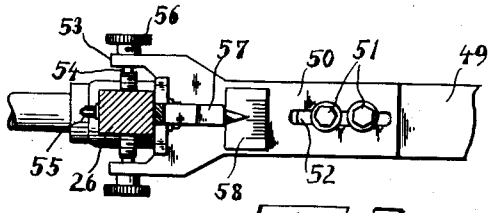

Fig. 7

INVENTOR:
JOSEPH O. E. DIETERICH

BY

Karl F. Ross

AGENT

United States Patent Office

2,717,158

Patented Sept. 6, 1955

2,717,158

RANDOM SELECTOR FOR AMUSEMENT DEVICE OR THE LIKE

Joseph O. E. Dieterich, Jamaica, N. Y.

Application May 14, 1952, Serial No. 287,673

5 Claims. (Cl. 273—141)

My present invention relates to amusement devices and the like and is particularly concerned with improvements in devices of the type wherein a pointer, wheel or other indicating member is mounted on a rotating shaft which, upon coming to a stop, places such member in a random position opposite one of a number of markings thus selectable.

Devices of this description include so-called wheels of fortune, designed to choose a lucky number the holder of which thereupon becomes eligible for a prize or for an opportunity to participate in some game or contest, as well as other random selectors such as used, for example, to determine vacation schedules among members of a crew.

The general object of my invention is to provide means for avoiding the usual drawback of such devices which resides in the possibility that the pointer (or other indicating member) comes to a stop substantially intermediate two adjoining markings, thereby giving rise to doubt, argument and dissatisfaction.

In accordance with my invention I provide a pair of coacting elements, including serrated element (hereinafter referred to as "ratchet") and an indexing element (hereinafter referred to as "pawl") adapted to engage in the serrations of the former, one of these elements—preferably the ratchet—being positively coupled with the indicating member and being held out of engagement with the other element (i. e. the pawl) during at least the first stages of the shaft's rotation. The means for temporarily disengaging the two elements may be a centrifugal governor, a solenoid, or some equivalent device actuated either by the rotative force itself or by the agent (e. g. electric current) used to bring about the rotation of the shaft.

By properly correlating the positions of the markings with those of the serrations of the ratchet it will be possible to prevent the indicating member from ever coming to a halt between two markings, inasmuch as it will only be possible for the apparatus to select one of a predetermined number of fixed resting positions in which the pawl can fall into one of the serrations or notches of the ratchet. It will, of course, be understood that the markings may equally be provided on the movable indicating member carried by the shaft, the pointer then being stationary.

By giving the ratchet the form of a large wheel, coupled to the shaft, one can add the inertia of the wheel to that of the remainder of the moving system, thereby prolonging the excitation of the game and insuring an impartial and random result, independent of such factors as the starting position of the indicating member and the manipulations of the operator.

The invention will be particularly described with reference to the accompanying drawing showing an apparatus designed for the entertainment of a television audience. It should, however, be understood that the invention in its broader aspects is not limited to this specific mode of utilization.

The apparatus hereinafter described is designed to select at random a telephone number from within the subscriber network of the area in which the television transmitter is located. A pointer, set in motion manually or electrically and allowed to spin until arrested by the interengagement of the pawl and the ratchet, cooperates with a plurality of dials, including a removable dial bearing the office code designations of the participating exchanges and a stationary dial bearing the numerical designations from 0 to 9, for the purpose of selecting a complete telephone number by a succession of spins. A viewer recognizing the selected number as his own, upon immediately contacting the transmitting station, becomes eligible for a prize.

In the accompanying drawing:

Fig. 1 is a side elevation of my apparatus, operable by means of a control circuit shown in diagrammatic form;

Fig. 2 is a front elevation of the apparatus of Fig. 1, showing the stationary dial;

Fig. 3 is a front elevation of the removable dial adapted to be placed in front of the dial of Fig. 2;

Fig. 4 is a section on the line **4—4** of Fig. 1, showing an elevation of the ratchet wheel;

Fig. 5 is an enlarged fragmentary top view of a pawl holder forming part of the apparatus of Fig. 1, showing details of the adjusting mechanism for properly aligning the pawl with the ratchet;

Fig. 6 is a section taken on the line **6—6** of Fig. 5;

Fig. 7 is a section on the line **7—7** of Fig. 1, drawn to the same scale as Figs. 5 and 6 and showing additional details of the adjusting mechanism;

Fig. 8 is a fragmentary side elevation, partly in section, of a solenoid-controlled ratchet wheel forming part of a somewhat modified apparatus according to the invention; and

Fig. 9 shows a modified control mechanism for an apparatus according to Fig. 1 or 8.

Fig. 1 shows a base **10**, adjustably positioned on a table **11** by means of screw legs **12**, a bracket **13** rising from the base and forming a rear bearing for a horizontal shaft **14**, and an upright **15** rising from the base and forming a front bearing for this shaft. The front face of the upright **15** (Fig. 2) carries a dial **16** divided into ten sectors **17**, these sectors bearing the numerical designations 0 . . . 9. A pointer **18**, carried on the shaft **14**, cooperates with the dial **16**.

The shaft **14** has a splined portion **19** on which slides the correspondingly grooved hub of a ratchet wheel **20**. Whereas it is preferred to provide exactly 360 teeth on this wheel, it will be noted that the number of teeth **21** actually shown is considerably smaller, to simplify the drawing. Back of the wheel **20** a collar **22** is fixed, by means of a screw **23**, to the shaft **20**; a centrifugal governor, comprising spring blades **24** and weights **25**, is anchored to the collar **22** and to the hub of ratchet wheel **20**.

An arm **26**, swingable about the shaft **14**, carries in its head **27** a bushing **28** in which a pawl **29** is slidable, rotation of the pawl in the bushing being prevented by a key **30** playing in a slot **31** of the bushing. The tip of the pawl is shaped to fit the teeth **21** which should have flanks inclined at a sufficiently obtuse angle to cam the pawl out of the intervening notches as long as the wheel **20** has sufficient momentum to overcome the friction between the parts. An angle of 90° has been shown by way of example.

A spring **32** bears upon the outer (forward) end of the pawl **29** to urge it into engagement with the teeth **21**. The other end of tthe spring is held in a threaded cup **33** which is screwed into a bracket **34**, mounted on the arm **26**, to enable adjustment of the tension of the spring.

The bushing 28 is normally immobilized in the head 27 by means of a set screw 35 (Figs. 5, 6) but, upon loosening of this screw, may be rotated therein to a limited extent for the purpose of properly aligning the pawl with the teeth 21; an adjustment of this type may be necessary whenever a new pawl, to replace a worn one, is introduced into the head 27. Venier adjustment of the angular position of the bushing 28 within the head 27 is possible by means of a forked arm 36 extending from the bushing, through a slot 37 in head 27, into engagement with a grooved collar 38 carried on a spindle 39. The spindle is held in two lugs 40, rising from the head 27, and threadely engages one of these lugs, being rotatable by means of knobs 41.

A removable dial 42, shown in Fig. 3 and indicated in dot-dash lines in Fig. 1, is adapted to be placed in front of the fixed dial 16, its correct position being determined by notches 43 engaged by projections 44 extending from the face of member 15. A catch 45 and a fixed strip 46 serve to hold the removable dial in place. This dial has a circular cutout 47, large enough to clear the pointer 18, and is provided around said cutout with a number of sectors 48. The number of these sectors (sixty in the example illustrated) is chosen to be an exact submultiple or aliquot part of the number of teeth 21 which for this reason has been assumed to be the easily divisible number 360. It will be readily understood that upon proper alignment of the pawl 29 with the fixed dial 16, or with its stationary support 15, the pawl will always stop the ratchet wheel 20 in a position in which the pointer 18 is aligned with one of the narrow sectors 48; upon removal of dial 42 the pointer will then register with some portion of one of the wide sectors 17 but never with any of the intervening dividing lines.

The correct positioning of the arm 26, and with it of the pawl 29, is effected by a mechanism best seen in Fig. 7. It comprises a bracket 49 extending from the upright 15, an extension 50 adjustably secured to said bracket by means of screws 51, passing through a slot 52 in this extension, and a pair of lugs 53 at the extremity of said extension 50 traversed by a spindle 54 which threadedly passes through the arm 26. A set screw 55, traversing this arm as well as an upstanding part of extension 50, normally holds arm 26 in fixed position with respect to the linkage 49, 50 and, thereby, to the upright 15. When this screw is loosened, the spindle 54 may be rotated, with the aid of knobs 56, to displace the arm 26 by a number of degrees (or divisions in terms of ratchet teeth spacing) ascertainable from the position of a finger 57, extending from arm 26, on a scale 58 carried by member 50. The screws 51 enable the correct positioning of the arm 26 parallel to the face of wheel 20.

The sectors 48 shown in Fig. 3 are inscribed with the office codes of the telephone network of a specific region, in this particular case of Westchester County, New York. The number of these office code combinations, as it happens, is fifty-four, hence not a submultiple of 360. Six additional sectors 48*x*, distinctively marked by a circle or the like, have accordingly been added to make up the required number; these additional sectors may be designated as "repeat," "grand prize" or other extraordinary selections. A board 58 serves for recording the selections made by the pointer.

Various arrangements may be provided for setting the apparatus in motion. Fig. 1 shows a motor 59 coupled, over a free-wheeling device 60, with a pulley 61 from which a belt 62 extends to a pulley 63 on shaft 14. The motor is energizable, by means of a switch 64, from a source of current 65; a slow-operating relay 66, bridged across the source 65 in series with a resistor 67, opens the motor circuit after a short period, thus allowing the system 14, 18, 20 to free-wheel by inertia only. As long as the speed of rotation is high, governor 24, 25 retracts the wheel 20 out of engagement with the pawl 29; as its motion slows down, its teeth brush against the pawl which

eventually arrests the pointer 18 in a position aligned with one of the sectors 48 or 17. A solenoid 68, adapted to retract the pawl 29 against the force of spring 32, is shown connected in parallel with the motor 69; this solenoid facilitates starting and reduces friction and, hence, wear upon the parts 21 and 29 but may be omitted; it has not been illustrated in Fig. 5.

An alternative control mechanism, adapted to be used where mains current is not readily available, is shown in Fig. 9. There a crank 69 drives, over bevel gears 70 and 71, the freewheel 60 and with it a generator 72. This generator delivers current to conductors 73, 74 which may lead to the solenoid 68.

Fig. 8 shows a solenoid 75 which is adapted to retract the wheel 20 during starting, by acting upon a ferromagnetic sleeve 76 secured to the wheel, and which may be energized from the line 73, 74 in lieu of the solenoid 68; a dashpot 77, which receives an extension 78 of the wheel hub, retards the return of the wheel 20 (which is acted upon by a suitable spring not shown) so that the combination 75, 77 will be the substantial functional equivalent of the governor 24, 25.

It should be understood that my invention may be modified in various ways and that departures from the arrangements shown and described are permissible within the scope of the appended claims.

I claim:

1. A random selector comprising a movable and a stationary indicator member positioned adjacent each other for relative movement through a plurality of operative relative positions separated by inoperative positions, a serrated element, an indexing element adapted for camming engagement with the serrations of said serrated element, one of said elements being positively coupled with said movable member, means for preventing the other of said elements from following the movement of said one of said elements, said serrations by their engagement with said indexing element defining respective ones of said operative positions of said members, means yieldingly urging said elements into camming engagement with each other, electromagnetic decoupling means operatively connected with one of said elements and energizable to withdraw the latter from the other of said elements, drive means for displacing said movable indicator member with respect to said stationary indicator member, circuit means coupled with said drive means for energizing said electromagnetic decoupling means during at least part of the operation of said drive means, and coupling means between said drive means and said movable indicator member, said coupling means including a free wheeling mechanism enabling continued relative displacement of said indicator members, against the camming action of said elements, by inertia following de-activation of said means and of said decoupling.

2. A random selector according to claim 1 wherein said drive means comprises an electric motor provided with an energizing circuit in common with said decoupling means, switch means for closing said energizing circuit, and slow-acting relay means in said energizing circuit adapted to de-activate said electromagnetic decoupling means and said motor a predetermined time after operation of said switch means.

3. A random selector according to claim 1 wherein said circuit means comprises a generator of electric current mechanically coupled with said drive means.

4. A random selector comprising a rotatable shaft, a movable indicator member carried on said shaft, a stationary indicator member, said indicator members being positioned adjacent each other for relative movement through a plurality of operative relative positions separated by inoperative positions, a ratchet element on said shaft provided with notches and operatively coupled by said shaft with said movable indicator member, a non-rotatable pawl element adapted for camming engagement with respective notches of said ratchet element, said

notches by their engagement with said pawl element defining respective ones of said operative positions, means yieldingly urging said pawl element into camming engagement with said notches, drive means for setting said shaft in rotation, electromagnetic decoupling means operatively connected with one of said elements and energizable to withdraw the latter from the other of said elements, circuit means coupled with said drive means for energizing said electromagnetic decoupling means during at least part of the operation of said drive means, and coupling means between said drive means and said shaft, said coupling means including a freewheeling mechanism enabling continued relative displacement of said indicator members, against the camming action of said element, by inertia following de-activation of said drive means and of said decoupling means.

5. A random selector comprising a rotatable shaft, a movable indicator member carried on said shaft, a stationary indicator member positioned adjacent said movable member for relative movement through a plurality of operative relative positions separated by inoperative positions, said shaft and said movable member constituting a moving system, a wheel on said shaft having a mass which is large compared with that of said moving system, said wheel being provided with angularly spaced notches,

a non-rotatable pawl element, means yieldingly urging said pawl element into camming engagement with said notches, said notches when thus engaged defining respective ones of said operative positions, drive means for setting said shaft in rotation, coupling means between said drive means and said shaft, said coupling means including a freewheeling mechanism, and means for temporarily disengaging said pawl element from said notches during operation of said drive means, the inertia of said wheel together with said freewheeling mechanism enabling continued rotation of said moving system, against the camming action of said pawl and said notches, upon deactivation of said drive means and of said decoupling mechanism.

References Cited in the file of this patent

UNITED STATES PATENTS

2,175,892	Greene et al.	Oct. 10, 1939
2,224,490	Simmons	Dec. 10, 1940
2,500,830	Jones	Mar. 14, 1950
2,600,790	Marian et al.	June 17, 1952

FOREIGN PATENTS

543,155	Great Britain	Feb. 12, 1942