United States Patent [19]

Ochrymowich

[11] **3,830,011**

[45] **Aug. 20, 1974**

[54] **DEFORMABLE TUBULAR RODS WITH DEFORMABLE SHEET MATERIAL CONNECTORS**

[76] Inventor: **Steven Ochrymowich,** 39 McCulla Ave., Brampton, Ontario, Canada

[22] Filed: **Apr. 9, 1973**

[21] Appl. No.: **348,906**

[52] **U.S. Cl.** **46/29,** 403/171, 403/220

[51] **Int. Cl.** **A63h 33/10**

[58] **Field of Search** ..... 46/28, 29, 23; 403/171, 403/172, 176, 217, 295; 35/18 A, 34

[56] **References Cited**

UNITED STATES PATENTS

1,092,217	4/1914	Hopkins	46/29
1,347,808	7/1920	Franklin	403/172 X
3,148,539	9/1964	Cook	46/29 X
3,577,660	5/1971	Kenney	35/18 A

FOREIGN PATENTS OR APPLICATIONS

246,854	9/1963	Australia	46/29
1,236,929	6/1960	France	46/29

Primary Examiner—F. Barry Shay

[57] **ABSTRACT**

A model kit of the type described for building a wide variety of different geometric structures in which the struts and hub connectors may be manufactured by relatively simple inexpensive tooling, the struts being hollow tubular members extruded by a plastic extrusion process, and cut to length by any suitable shearing means, and the hub connectors preferably being formed by stamping them out of sheet thermoplastic material, thereby avoiding the necessity for the design and building of expensive injection moulding dies, and at the same time providing a wide range of different parts having a great flexibility in use, and having a long working life and being to all intents and purposes indestructable.

6 Claims, 33 Drawing Figures

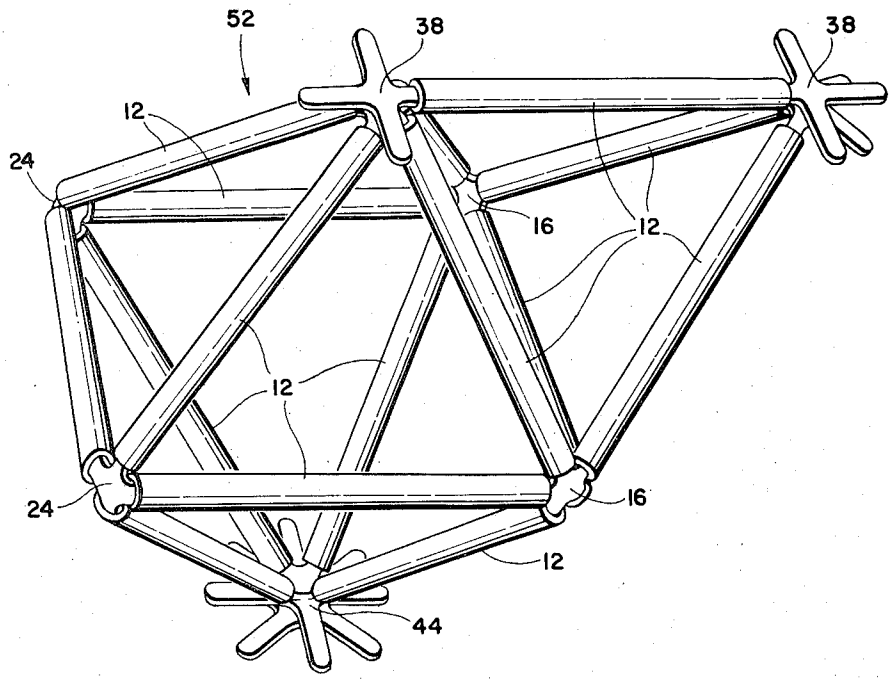

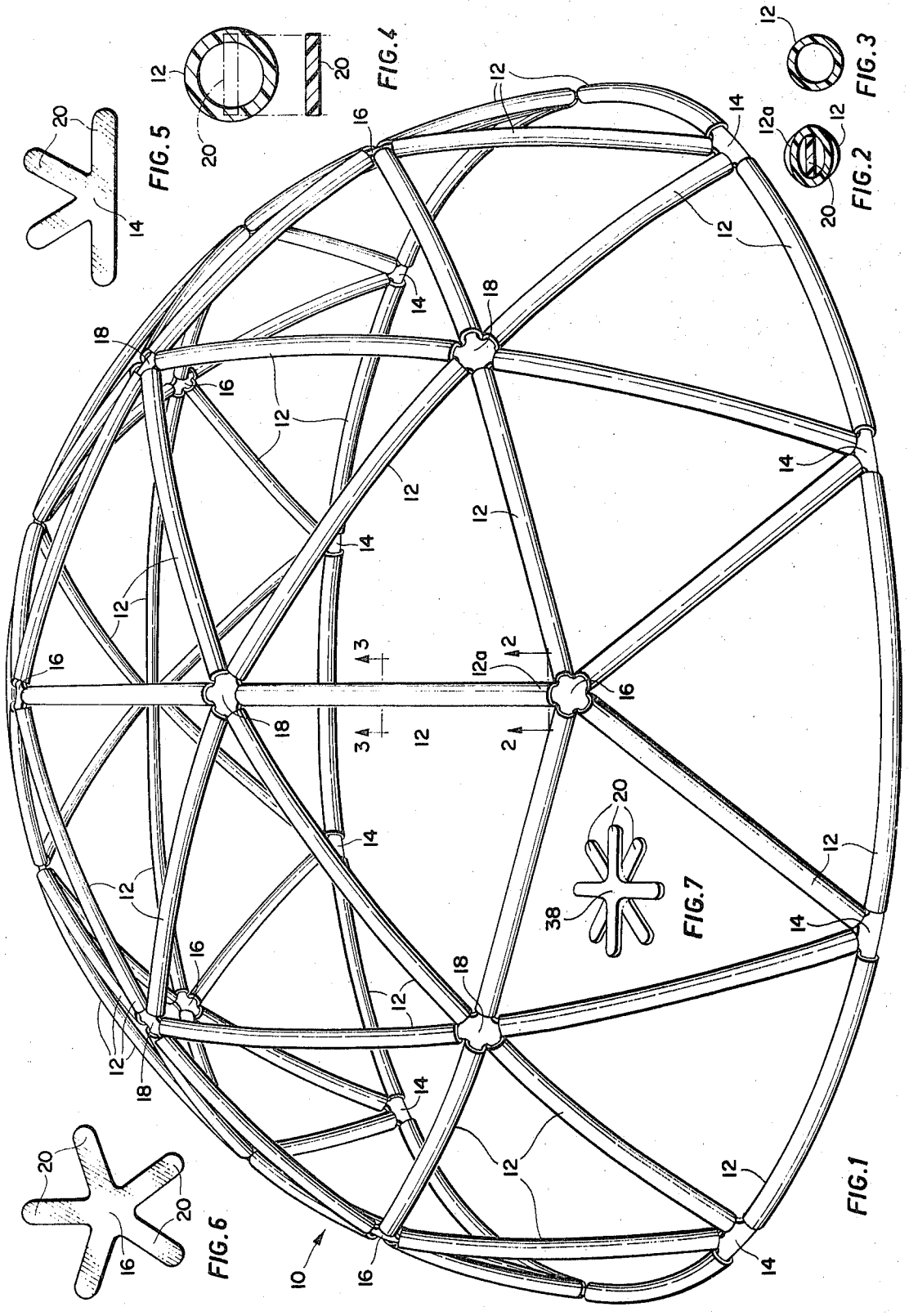

FIG. 1

FIG. 2

FIG. 3

FIG. 4

FIG. 5

FIG. 6

FIG. 7

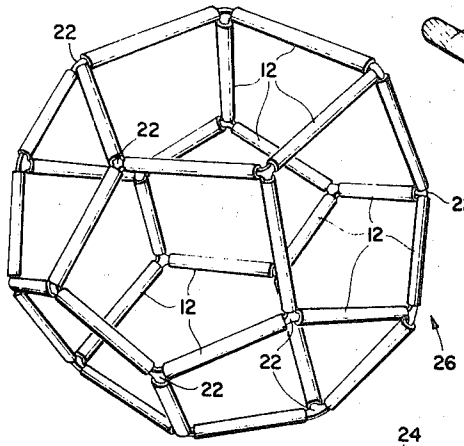

FIG. 16

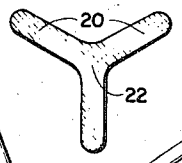

FIG. 10

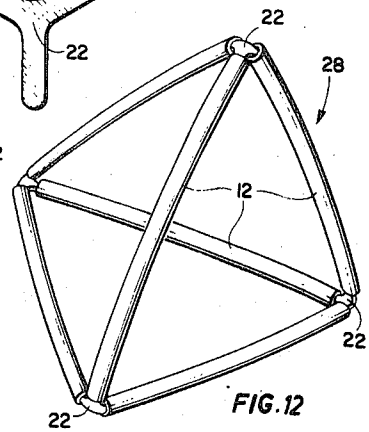

FIG. 12

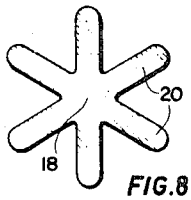

FIG. 8

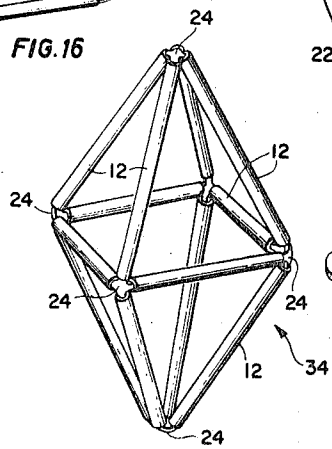

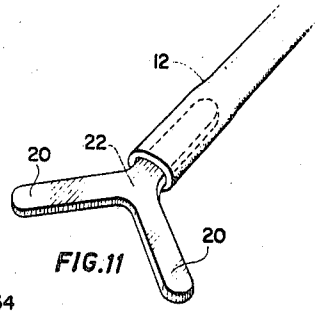

FIG. 11

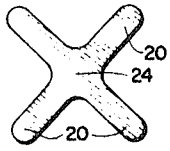

FIG. 9

FIG. 14

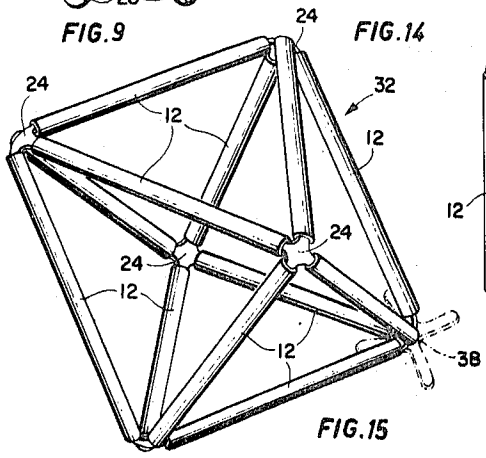

FIG. 15

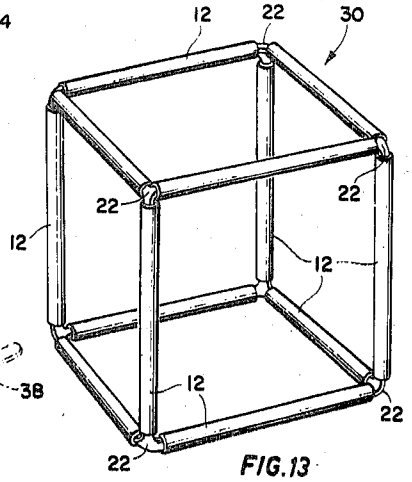

FIG. 13

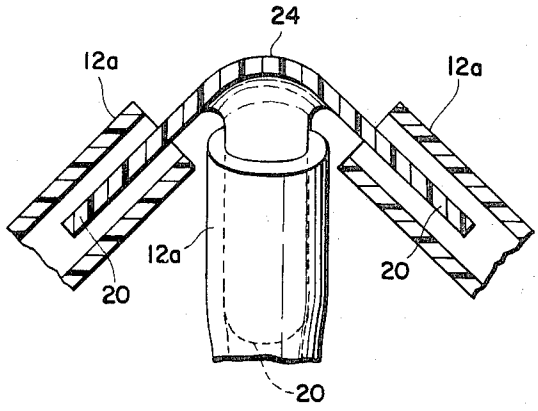

FIG. 20

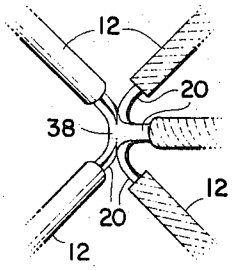

FIG. 17

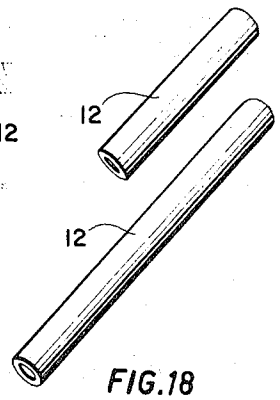

FIG. 18

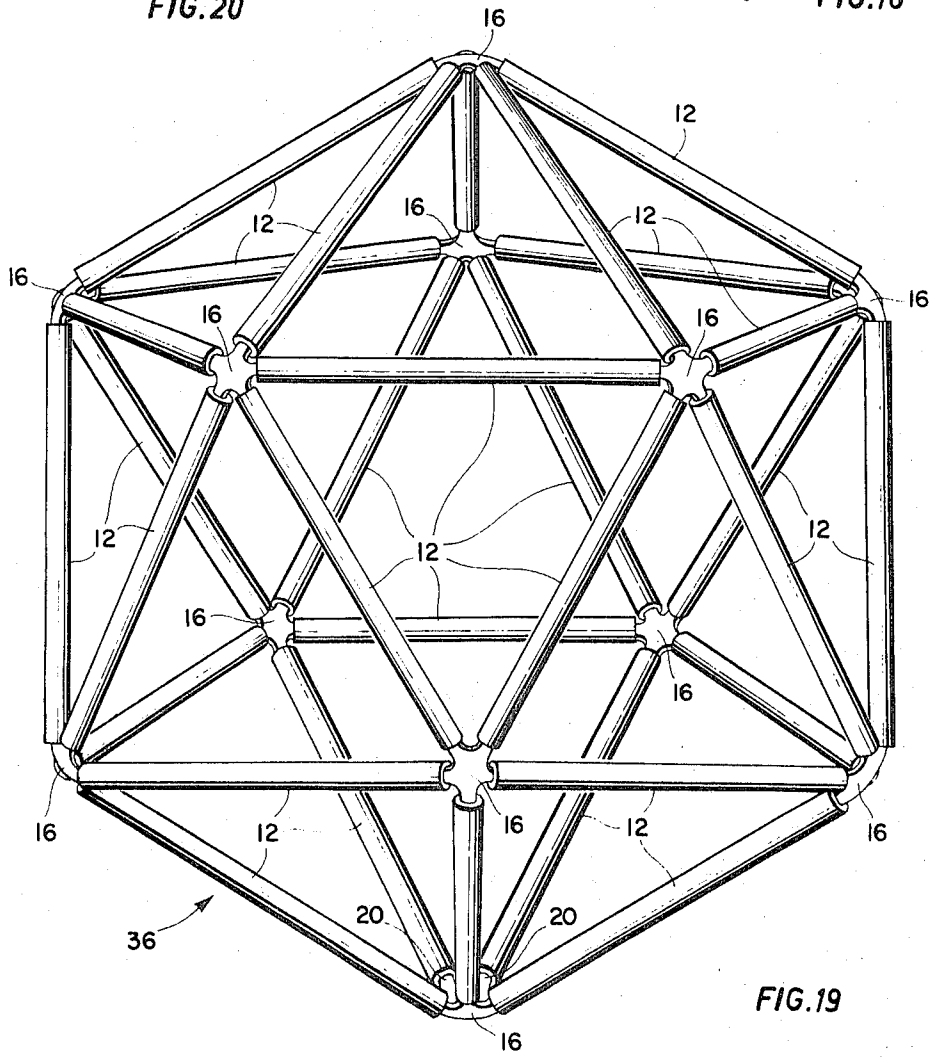

FIG. 19

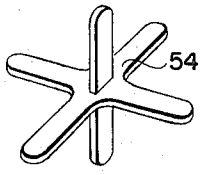

FIG. 21

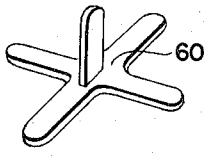

FIG. 24

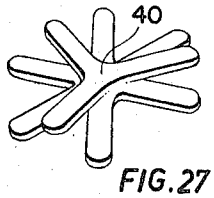

FIG. 27

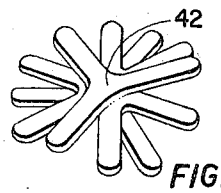

FIG. 28

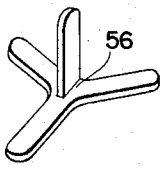

FIG. 22

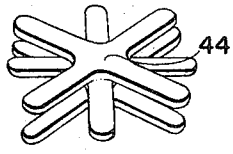

FIG. 29

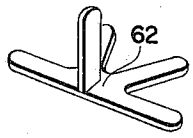

FIG. 25

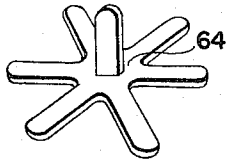

FIG. 26

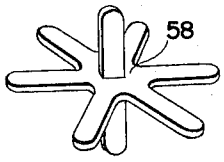

FIG. 23

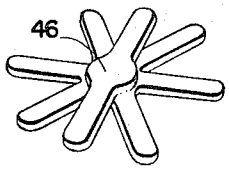

FIG. 30

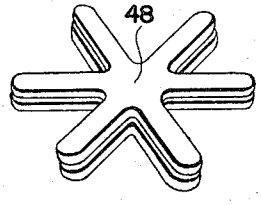

FIG. 31

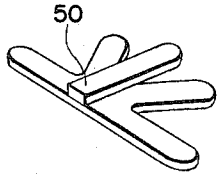

FIG. 32

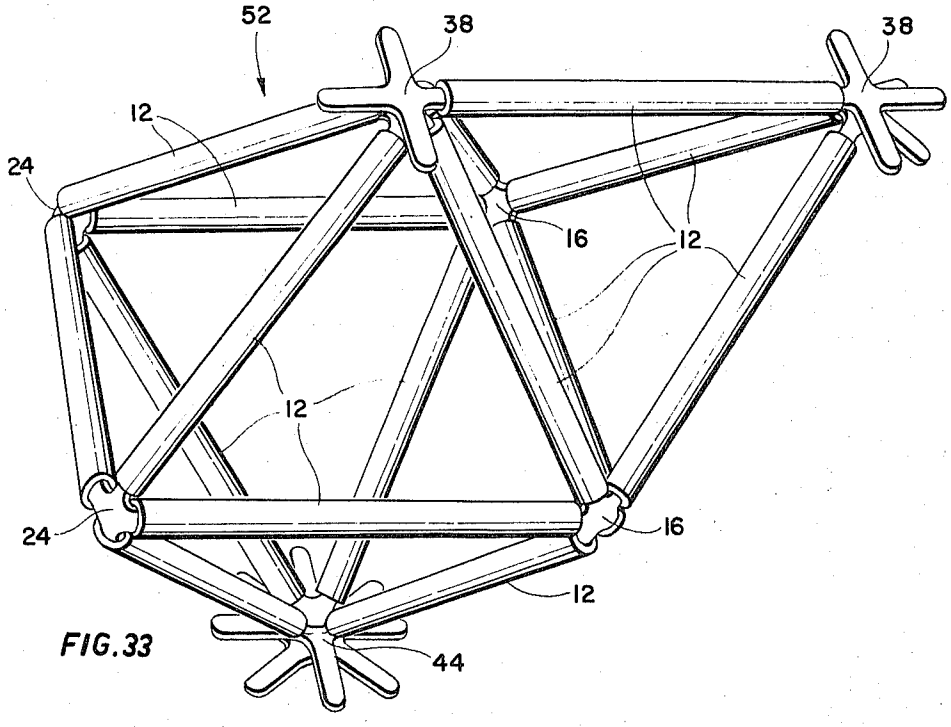

FIG. 33

DEFORMABLE TUBULAR RODS WITH DEFORMABLE SHEET MATERIAL CONNECTORS

The present invention relates to a kit of parts for building various model structures of a variety of different geometrical designs.

BACKGROUND OF THE INVENTION

Model kits for building a wide variety of different geometrical figures and structures have been proposed and are now available on the market in a wide variety of designs. The majority of such kits can be used to build a complete range of polyhedrons, including tetrahedrons, hexahedrons, octahedrons, dodecahedrons, icosahedrons, and also various dome structures ie geodesic and lamella domes. In the majority of such model kits, all that is required is to provide the model builder with sufficient number of parts to construct the various different geometric figures, so as to learn and study the characteristics of each of them. This will be of great utility to children, and also to adults who wish to study the suitability of particular geometric structures for particular purposes.

In order for the model kits to be adaptable to a sufficient range of geometric structures it is desirable that the kit should have a series of struts of some sufficiently rigid material to be readily built into the appropriate structure, and preferably in two or more different lengths so that a complete range of structures may be built. In addition, a variety of connectors are required for connecting these struts together to make the variety of different geometric figures required.

Such connectors must have the capability of interconnecting from 3, to 12 struts together at different points in a geometric structure so as to permit complete flexibility in building. In addition, in order to construct a geodesic dome structure, such as is disclosed in U.S. Pat. No. 2,682,234 granted to R. Buckminster Fuller in 1951, it is necessary to provide an additional base ring to provide connection at the periphery of the dome.

Various different proposals have been made for the design of such model kits in the past, all of which have achieved with a greater or lesser degree of effectiveness the various objectives outlined above. However, the cost of manufacture and marketing such kits has generally speaking been so great that they have not achieved a wide range of acceptance. Principally, this has been due to the very high cost of the tooling required to manufacture a costly variety of connectors. Usually, such prior model kits connectors were manufactured of injection moulded plastic or rubber-like material, and the production of the different injection moulds for the purpose of providing all the types required for a complete kit was so great as to render the price of such kits unacceptable to many purchasers.

In addition, the design of the majority of such kits has been such that the assembly of the various struts and hub connectors was a tiresome and in some cases difficult task, and the repeated assembly and disassembly tended to weaken the interconnection between the parts, and even to weaken the parts themselves such that the kit had a relatively short usefull life. Breakage of one or more connectors or struts would make it impossible for a kit to build the more complex structures, and it was necessary either to provide a system of replacement parts, or to sell kits with a number of spare parts, thereby increasing the cost to the purchaser.

BRIEF SUMMARY OF THE INVENTION

The invention therefore seeks to provide a model kit of the type described for building a wide variety of different geometric structures in which the struts and hub connectors may be manufactured by relatively simple inexpensive tooling, the struts being hollow tubular members extruded by a plastic extrusion process, and cut to length by any suitable shearing means, and the hub connectors preferably being formed by stamping them out of sheet thermoplastic material, thereby avoiding the necessity for the design and building of expensive injection moulding dies, and at the same time providing a wide range of different parts having great flexibility in use, and having a long working life and being to all intents and purposes indestructable.

More particularly, it is an objective of the invention to provide a model kit having the foregoing advantages in which the hub connectors are die stamped out of sheet thermoplastic material, with a sufficient number of arms, and in a sufficiently different variety of configurations, to provide the capability for building a wide variety of different geometric structures, the arms of the interconnectors having a predetermined width greater than the interior diameter of the tubular strut members, whereby insertion of such arms into the tubular strut members will stretch and deform such strut members and provide a good tight frictional fit therewithin so that the structure may be put together and studied without falling apart.

The foregoing and other advantages will become apparent from the following description of a preferred embodiment of the invention which is given here with reference to the following drawings in which like reference devices refer to like parts through out the various views and diagrams.

BRIEF DESCRIPTION OF THE DRAWINGS

FIG. **1** is a perspective illustration of a geodesic dome model constructed from the kit according to the invention;

FIG. **2** is a section along the line **2—2** of FIG. **1**;

FIG. **3** is a section along the line **3—3** of FIG. **1**;

FIG. **4** is a schematic sectional illustration showing the dimensional relationships of the parts;

FIG. **5** is a plan view of a four-arm connector used in the kit for building the model of FIG. **1**;

FIG. **6** is a plan view of a five-arm connector or hub used in the kit for building the model of FIG. **1**;

FIG. **7** is a perspective illustration of a laminate form of an eight-arm connector or hub;

FIG. **8** is a plan view of a six-arm connector or hub used in building the model shown in FIG. **1**;

FIG. **9** is a plan view of another form of four-arm connector used in building other models;

FIG. **10** is a plan view of a three-arm form of connector or hub;

FIG. **11** is an perspective illustration showing the connector of FIG. **10** with one arm thereof inserted in a strut;

FIG. **12** is a perspective illustration of a tetrahedron model formed by the use of the kit according to the invention using connectors shown in FIG. **10**;

FIG. 13 is a perspective illustration of a hexahedron constructed using the kit according to the invention using connector shown in FIG. 10;

FIG. 14 is a perspective illustration of one shape of an octahedron constructed by means of the kit according to the invention;

FIG. 15 is a perspective illustration of a regular octahedron constructed by means of the kit according to the invention and showing an alternate form of connector in phantom, corresponding to the form of connector shown in FIG. 7;

FIG. 16 is a perspective illustration of a dodecahedron constructed by means of the kit according to the invention, using connectors shown in FIG. 10;

FIG. 17 is a view of the connector of FIG. 7, with the arms shown inserted into the appropriate struts;

FIG. 18 is a view of two different lengths of struts used to construct the various models;

FIG. 19 is a perspective illustration of an icosahedron constructed by means of the kit according to the invention, using connectors shown in FIG. 6;

FIG. 20 is a section along the line 4—4 of FIG. 15;

FIGS. 21, 22, 23, 24, 25 and 26 show various connectors which incorporate one or more additional arms arranged in a plane normal to the other arms;

FIGS. 27, 28, 29, 30, 31 and 32 show various other forms of multiple stack of connectors, being combinations of one or more different forms of connectors, as shown above, in sandwich form, and,

FIG. 33 shows a typical truss structure which may be incorporated into models of various different engineering truss designs.

DESCRIPTION OF A SPECIFIC EMBODIMENT

As shown in FIGS. 1, 2 and 3, the invention is there shown fitted together to build a model of a geodesic dome, in this case a so called "two frequency" dome. The dome shown as 10 will be seen to comprise a plurality of strut members 12, interconnected by means of connectors or hubs 14, 16 and 18. Each of the connectors 14, 16 and 18 is shown separately, in respective FIGS. 5, 6 and 8. Each of the connectors 14, 16 and 18 is provided with arms 20, the number and arrangement of such arms 20 being dependent upon the type of model which it is desired to build. Thus in the case of the geodesic dome 10 as shown in FIG. 1, the connectors or hubs 14 are provided with four such arms 20, two of which are in line with one another and the other two being angled 60° relative thereto as shown in FIG. 5. The connectors or hubs 16 are provided with six such arms 20 offset from one another by equal angles more or less in the form of a five pointed star, and in the case of the hub or connector 18, the arms 20 are offset from one another again by equal angles to form a six pointed star.

As best shown in FIG. 18, the struts 12 are formed of cylindrical tubular extruded plastic members having a predetermined internal diameter and wall thickness, such struts 12 being formed of different lengths to form different portions of such models. The connectors or hubs are formed of sheet thermoplastic material such as polyethylene sheet plastic material of a suitable density to render the same relatively flexible.

Such hubs or connectors are formed from such sheet material by simply die cutting them from such material without any requirement for injection moulding or other relatively more expensive manufacturing techniques.

As shown in FIGS. 2 and 3, the interconnection between the hubs or connectors and their associated struts 12 consists essentially of the interfitting of each of the arms 20 within the interior of the cylindrical tubular strut 12 each end of the strut 12, where such arm 20 is inserted, will be distorted or expanded into a flattened oval shape, as at 12*a* in FIG. 2, such distortion providing a good frictional grip between the respective arm 20 and its portion 12*a* of the strut 12.

As best shown in FIGS. 4 and 20, the relationship between the internal diameter of the tubular strut 12, and the arm portion 20 of the appropriate connector or hub, should preferably be such that the width of the arm 20 from edge to edge is greater than such internal diameter, but that the thickness of the arm 20, i.e., from upper to lower surface is substantially less.

Thus while the strut 12 is distorted by insertion of the arm 20, it is not distorted to so great an extent that the inner surfaces of strut 12 come into contact with the upper and lower surfaces of the arm 20, the only contact between strut 12 and arm 20 being along the side edges of arm 20.

It will be appreciated that the hubs or connectors 14, 16, 18 etc and their arms 20 are all of regular thickness and their upper and lower, or opposite, surfaces are in the same planes, parallel with one another.

In this way, while the arm 20, when inserted into the strut 12 will distort it into the flattened oval shape as shown in FIG. 2, it will nevertheless remain flexible enough to be bent into a variety of different angles, depending upon the type of structure being built, without tending to lose its frictional grip or be removed from the tubular strut 12.

In fact, it is found that if for example the form of the arm 20 is more or less square in cross section, and therefore provides a four point contact within the tubular strut 12, the arm 20 is relatively much less flexible, since as soon as it is inserted in the tubular strut 12, it becomes supported by such strut, and becomes much less flexible.

Thus the width-thickness relationship of the arm 20 in relation to the internal diameter of the strut 12 is of considerable significance in relationship to the present invention for the purposes of achieving the stated objects. Preferably, the struts 12 will be in the region of 0.25 inches external diameter, and have a wall thickness of 0.04 inches, thereby giving an internal diameter of the struts 12 of 0.17 inches.

Preferably, the dimensions of the arm 20 are such as to produce a distortion of the tube of between 0.02 and 0.04 inches from the circular cross section. Thus the arms 20 will preferably have a width somewhere in the region of between 0.19 inches and 0.21 inches.

Thus it may be stated that within the range of practical dimensions for the strut 12, i.e., practical for the purposes for which the invention is intended namely the building of geometric models, the arms 20 should be wider than the internal diameter of the struts 12 in a ratio of somewhere between about 1.1:1, and 1.2:1. Similarly, it may be stated that the thickness of the arms 20, as a fraction of the width, should be somewhere between about 0.2 and 0.3.

It will of course be appreciated that the illustration of FIG. 4 is essentially schematic and is not a scale drawing, it being necessary to enlarge or modify the specific

dimensions of the various parts to show details that might otherwise not be visible.

Other forms of connectors may be manufactured essentially in the same way as the connectors or hubs **14, 16,** and **18.** Thus as shown in FIG. **10** a connector **22** may be provided with only three arms **20,** and in FIG. **9** a connector **24** may be provided with four arms **20.** FIG. **11** shows in perspective, the connector **22** having an arm **20** inserted into a strut **12,** the other two arms **20** remaining free for interconnection with other such struts **12.** Such connectors **22** may be employed in the construction of a dodecahedron **26** as shown in FIG. **16.** The three arm connectors **22** may be also used in the construction of the tetrahedron shown in FIG. **12.** Note particularly in relation to FIG. **12,** the arms **20** of the connector **22** are required to bend through an angle greater than **90** degrees, and are nonetheless found to function perfectly satisfactorily.

The three arm connectors **22** may also be used in the construction of a hexahedron **30,** as shown in FIG. **13.**

The four arm connectors **24** may be used in the construction of an octahedron **32** as shown in FIG. **15,** wherein all of the struts **12** are the same length, or may if desired be used in the construction of a modified form of octahedron **34** as shown in FIG. **14** wherein some of the struts **12** are longer than others.

The five arm connectors **16** may also be used in the construction of an icosahedron **36** as shown in FIG. **19.**

Minor modifications to the invention enable various different such structures to be joined together in a continuous grouping, somewhat in the manner of a crystalline structure in a variety of different groupings. This may be done by simply taking any two connectors and fastening them together for example by a rivet (not shown). However, it is preferable that the connectors should be joined together by some form of cementing or thermoplastic welding technique such as ultrasonic welding, as best shown in FIG. **7.** Such a modified connector **38** will be seen to have eight arms **20,** being formed simply by taking two of the four arm connectors **24** of FIG. **9** and ultrasonically welding them together at their centres with the arms **20** offset from one another. Obviously, the same thing can be done with any of the connectors if desired. When assembled such a modified connector **38** may be positioned as for example is shown in FIG. **17.**

FIGS. **27, 28, 29, 30, 31** and **32** show various other forms of such multiple connectors being either two or three such connectors sandwich together and fastened by any suitable means as described such as thermo plastic welding or the like. Thus FIG. **27** shows a connector **40** being a combination of the three-arm and a six-arm connector. FIG. **28** shows a connector **42** being a combination of two three-arm connectors and one six-arm connector. FIG. **29** shows a connector **44** being a combination of three four-arm connectors. FIG. **30** shows a connector **46** being a combination of a two-arm and a six arm connector. FIG. **31** shows a connector **48** being a combination of three six-arm connectors. FIG. **32** shows a connector **50** being a combination of a four-arm and a single arm connector.

These various modified connectors may be used, for example in the building of the basic engineering truss **52** shown in FIG. **33.** Will be seen that the truss **52** incorporates connectors **16, 24, 38,** and **44** at various different points. Such a truss is basically a combination of an octahedron and a tetrahedron and is referred to as an "octtet" truss (See Inventory of World Resources document **2,** p.60). It will be seen that by the use of the multiple connectors **38** and **44** in the appropriate positions, that the truss may be multiplied more or less continuously and interconnected with adjacent such trusses to provide a model of a continuous reinforced structure if desired.

In this way a variety of different engineering structures such as trusses and the like may be built and studied in three dimensions, for the purposes of obtaining a better understanding of engineering principles involved in such structures or even for the purpose of designing a new form of truss structure.

Other variations of connector are shown in FIGS. **21** and **26.** Thus FIG. **21** shows a connector **54** which is the basic four-arm connector provided with two single arms extending in a plane normal to the plane of the four-arms. FIG. **22** shows a connector **56** which is a three-arm connector with a single arm standing normally therefrom. FIG. **23** shows a connector **58** which is a six-arm connector with two further arms standing normally therefrom. FIG. **24** shows a connector **60** which is a four-arm connector, with an additional arm extending normally therefrom. FIG. **25** shows a connector **62** which is a modified form of four-arm connector with an additional arm extending normally therefrom. FIG. **26** shows a connector **64** which is a six-arm connector with a further single arm extending normally therefrom.

Obviously, such modifications could be continued almost indefinately depending upon the type of model which it is desired to build.

The foregoing is a description of a preferred embodiment of the invention which is given here by way of example only. The invention is not to be taken as limited to any of these specific features as described but comprehends all such variations as come within the scope of the appended claims.

What I claim is:

1. Apparatus for building structural models of various designs, such designs including a plurality of struts, joined together at their ends in various geometrical shapes, said apparatus comprising;

a plurality of tubular members, having a predetermined regular cross-section, formed of deformable thermoplastic material, and having a predetermined internal maximum cross-section dimension, and a predetermined wall thickness, said tubular members being open at both ends and of regular shape along their length;

a plurality of connector members, said connector members being formed of flexible sheet thermoplastic material of uniform thickness, and defining a solid central portion of said sheet material, and a plurality of arms of said sheet material extending therefrom in angularly spaced apart relation, said arms being formed in a flattened shape, having side edges, and being rounded at their free ends, said arms having a regular flattened shape and thickness throughout their extent, and being of a thickness equal to that of said central portion, and having a width, defined by said side edges greater than their thickness, such that the thickness of said arms, is between about 0.2 and 0.3 of the width of said arms, and the width of said arms being greater than

the internal diameter of said tubular members, and being capable of being inserted into the ends of said tubular members for interconnecting the same, the width of said arms being such that, when inserted into the ends of said tubular members, said arms procure a distortion of said cross-section of said tubular members, but without producing contact between the interior of said tubular members and said upper and lower surfaces of said arms, and the space between adjacent said arms

2. Apparatus as claimed in claim 1 wherein said tubular members are formed in groups of at least two different lengths, and wherein said connectors include groups of connectors having different numbers of arms.

3. Apparatus as claimed in claim 1 wherein the width of the arms is arranged to be between about 1.1:1 and 1.2:1 of the internal diameter of the tubular members.

4. Apparatus as claimed in claim 1 wherein at least some of said connectors are formed by attaching two pieces of sheet thermoplastic material together in sandwich formation, one above the other in separate planes each said piece of material defining arms as aforesaid.

5. Apparatus as claimed in claim 1 wherein at least some of said connectors are formed with a plurality of their arms extending from said central portion in a common plane, and with at least one further arm extending from said central portion in a different plane.

6. Apparatus as claimed in claim 1 wherein said tubular members are of cylindrical cross-section.

* * * * *