United States Patent [19]

Whyte

[11] **3,911,798**

[45] **Oct. 14, 1975**

[54] **IDENTIFICATION BAND APPLICATION METHOD**

[75] Inventor: **Andrian Alan Whyte**, Bardonia, N.Y.

[73] Assignee: **Schenley Industries, Inc.**, New York, N.Y.

[22] Filed: **Mar. 1, 1974**

[21] Appl. No.: **447,434**

[52] **U.S. Cl.** **93/36.6;** 40/312; 93/57; 156/252

[51] **Int. Cl.²** **B31B 49/02**

[58] **Field of Search** ..... 93/36.6, 57, 36 R, 36 M; 156/250, 252; 40/312; 229/87 R

[56] **References Cited**

UNITED STATES PATENTS

2,044,784	6/1936	Harshberger	156/252
3,335,937	8/1967	Kramer	40/312 X
3,445,053	5/1969	Lotz	229/87 R X
3,534,898	10/1970	Manizza	229/87 R X
3,729,126	4/1973	Donahue	229/87 R X

Primary Examiner—Roy Lake
Assistant Examiner—James F. Coan
Attorney, Agent, or Firm—Blum, Moscovitz, Friedman & Kaplan

[57] **ABSTRACT**

A method for sealing ends of an identification band to selected areas of a carton blank and providing fixed blank to blank and band to band seals in the carton erected from said blank and a novel carton blank embodiment to which the method is particularly applicable, and the carton erected therefrom.

5 Claims, 11 Drawing Figures

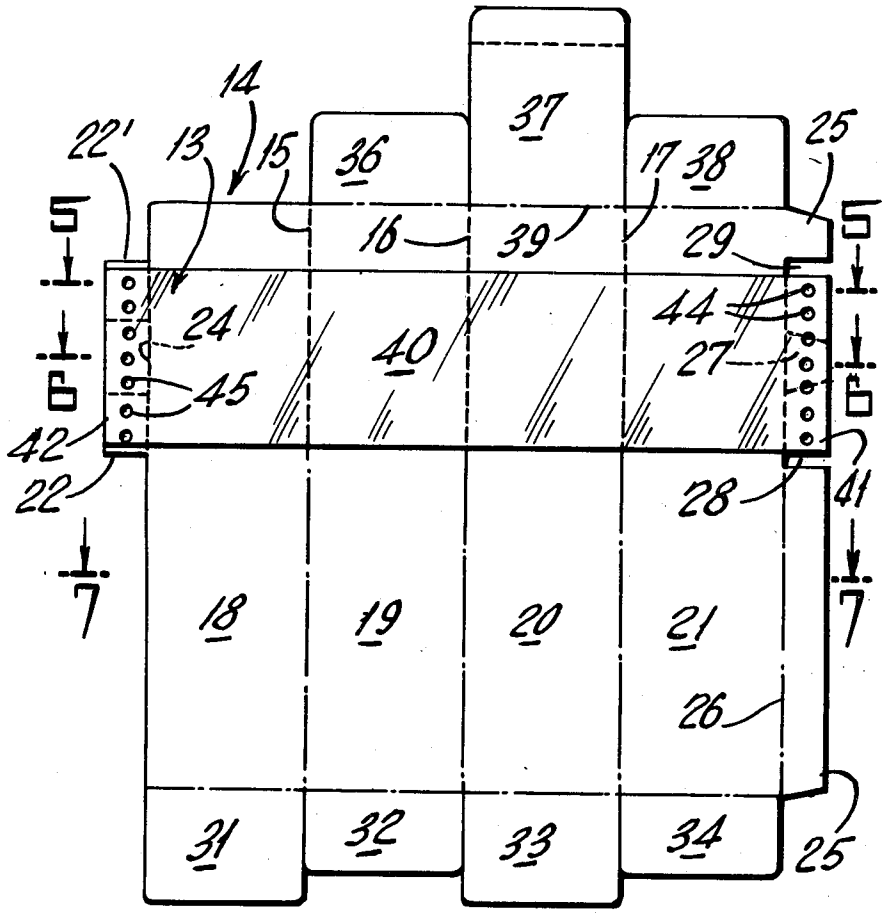

Fig. 1.

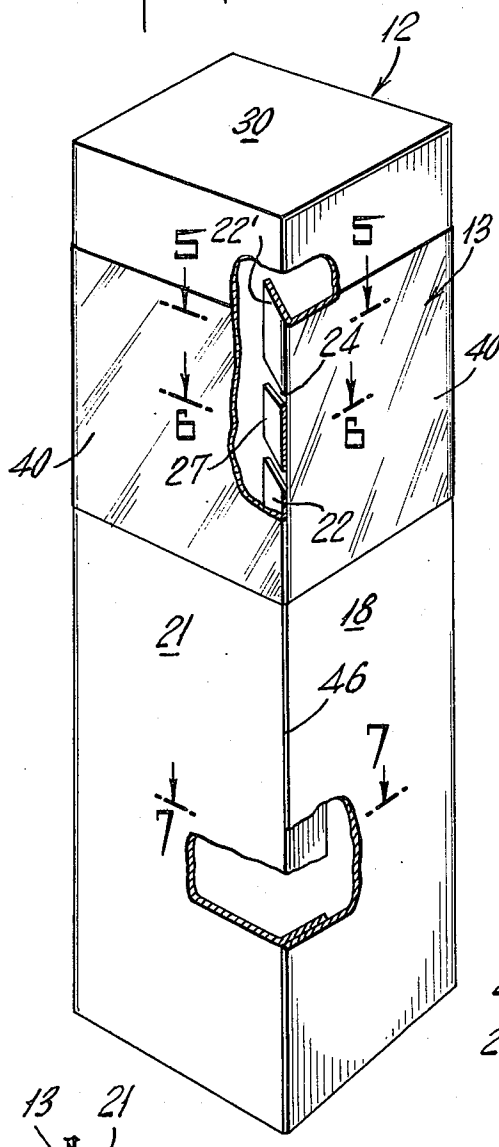

Fig. 2

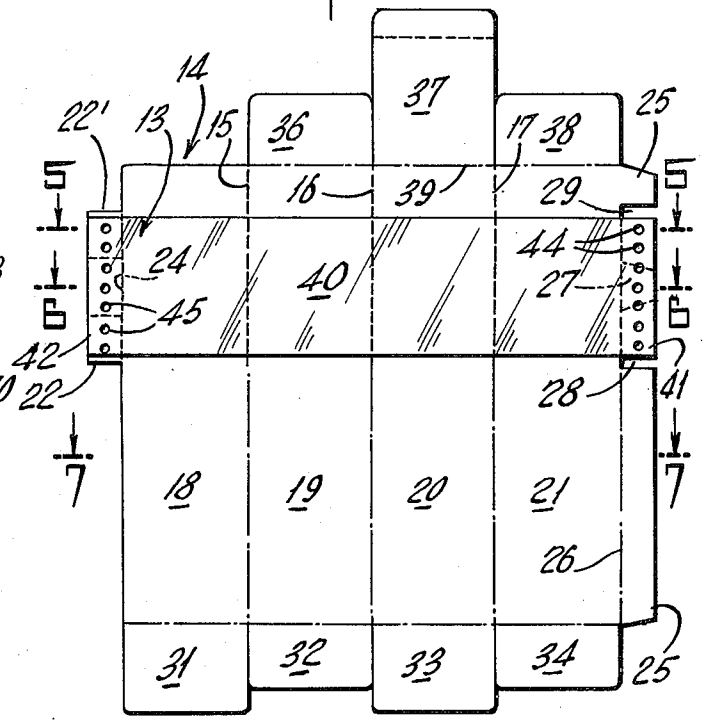

Fig. 3.

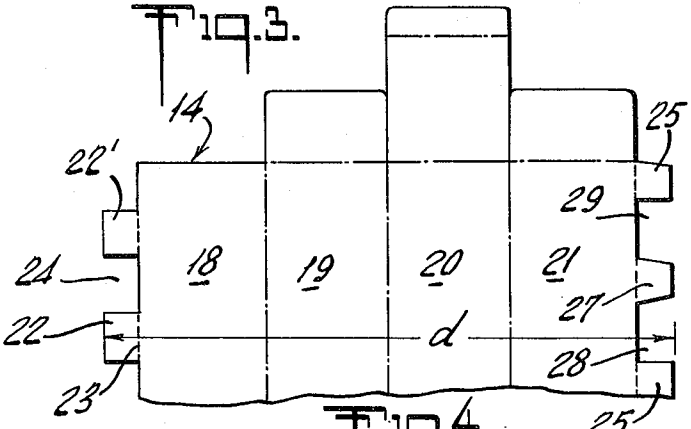

Fig. 4.

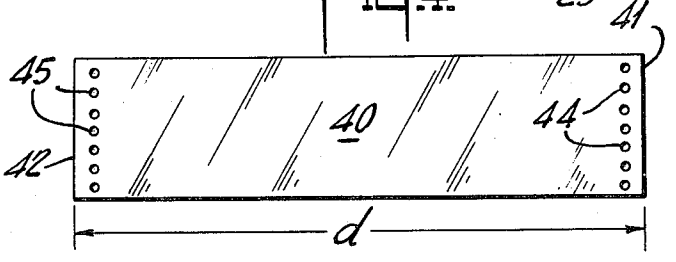

Fig. 5.

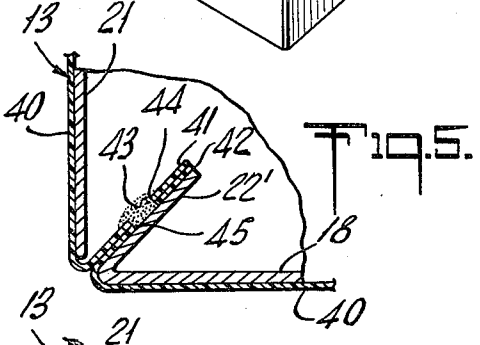

Fig. 6.

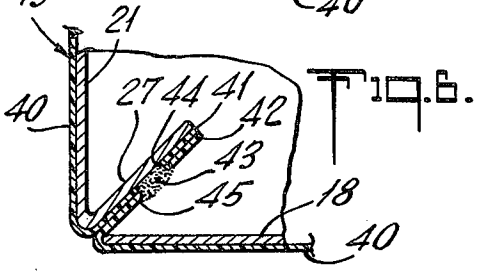

Fig. 7.

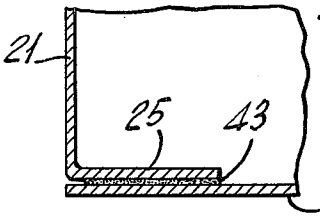

Fig. 8.

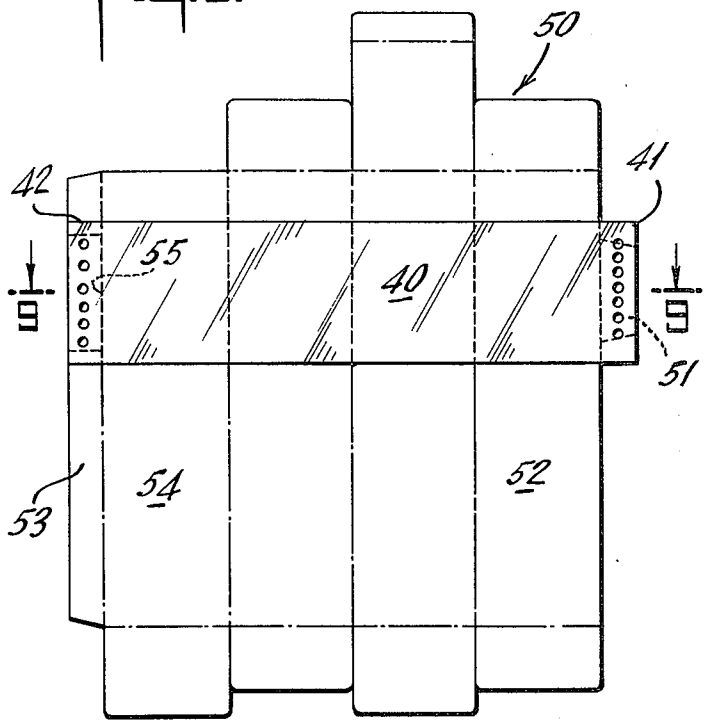

Fig. 9.

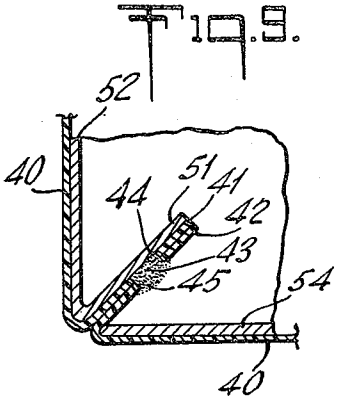

Fig. 10.

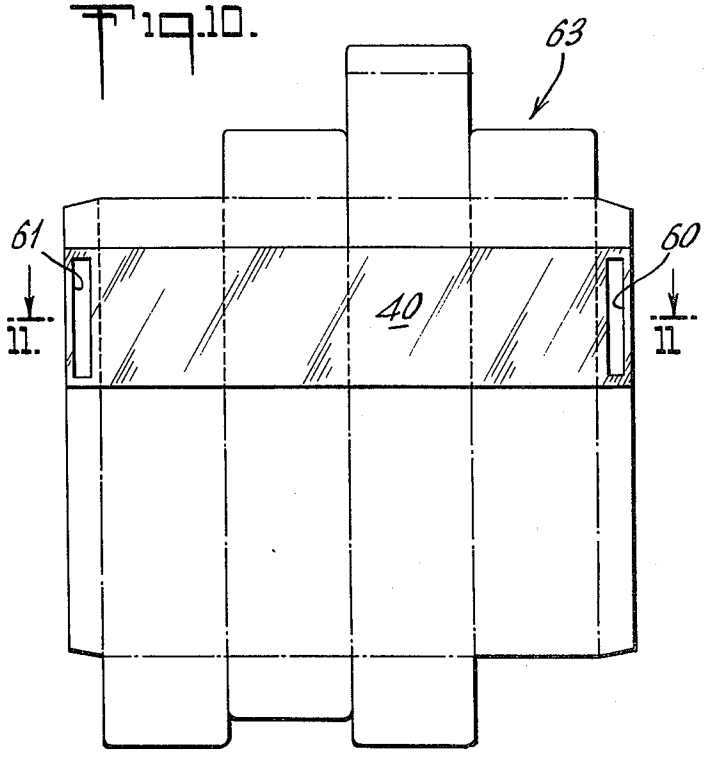

Fig. 11.

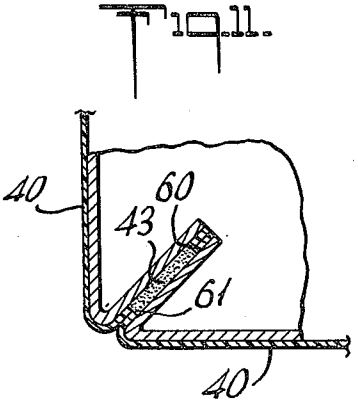

IDENTIFICATION BAND APPLICATION METHOD

BACKGROUND OF THE INVENTION

This invention generally relates to a method for sealing an identification band to a gift carton in which a product may be readily packaged in a conventional manner. In particular, this invention relates to a method for sealing ends of an identification band to selected areas of a carton blank for providing fixed blank to band and band to band seals in the carton erected therefrom, a novel carton blank enbodiment to which the method is particularly applicable and the carton erected therefrom.

It is known in the art to provide gift package cartons with removable identification bands carrying printed indicia rather than printing the advertising indicia directly on the carton. When these identification bands are employed, they have been secured to carton ends rather than body panels thereof, so that the gift giver can remove the band without defacing the carton. The cartons to which these bands have been secured are generally provided with a single body seam. However, according to prior band attachment methods, the body seam of the carton has separated during handling or one end of the band or the other has tended to detach from its securement position.

Therefore, a need has developed for permanently affixing ends of the identification band to a carton, until it is desired that the band be removed, i.e., manually removed. Moreover, the need has also developed for a carton embodiment wherein the body seam remains secure, although the carton is subjected to substantial handling in transit.

SUMMARY OF THE INVENTION

Generally speaking, in accordance with the invention, there is provided a method for sealing ends of an identification band to selected areas of a carbon blank for thereby providing fixed blank to blank and band to band seals in the carton erected from said blank and a novel carton blank embodiment to which the method is particularly applicable, and the carton erected therefrom.

In general, the method is applicable to a generally rectangular blank having score and cut lines formed therein and defining a plurality of centrally located and adjacent body panels having end forming flaps at opposite ends thereof, and at least one glue flap or tab along one of the body penels. The method comprises serially perforating the identification band along predetermined margins thereof selectively spaced from opposed ends of the identification band, the perforations being longitudinally arranged on each margin of the band and respective series of the perforations located in the margins proximate opposed ends of the band being substantially parallel, extending the identification band transversely across the body panels of the carton blank in overlying relationship to the outer surface thereof, applying glue to the at least one glue flap or tab provided along one of the body panels of the carton blank, affixing a perforated margin of an end of the identification band to the glue flap or tab so as to permit glue applied thereon to leak through the perforations arranged on the identification band margin, adhesively affixing the other perforated margin of the identification band to the carton blank so as to permit the adhesive to leak through the perforations provided in the margin of the other end of the identification band, the affixed identification band being transversely located across said outer surface of the body panels of the carton blank and being free from the body panels thereof, and erecting the carton blank with the affixed identification band to form a carton therefrom with the opposed perforated margins of the identification band being in face to face adhesive engagement.

While an identification band may be satisfactorily secured to any gift carton constructed from a blank of the generally rectangular type described according to the method, it is preferred that the method be employed in connection with a particular novel blank embodiment. The novel carton blank embodiment comprises a generally rectangular sheet having score and cut lines therein defining a plurality of adjacent body panels having end forming flaps at opposite ends thereof, a glue flap along one of the body panels, a tab defined in the glue flap, a pair of tabs along another of the body panels, a slot in the other body panel determined by the pair of tabs, and that slot is axially aligned with the tab provided in the glue flap. An identification band extends transversely across the body panels in overlying relation to the outer surface thereof. The identification band has opposed ends and in margins thereof located a predetermined distance from the respective opposed ends, respective series of longitudinal perforations are provided. One of the opposed ends of the identification band is adhesively secured to the pair of tabs along the margin of the identification band. The other end of the identification band is adhesively secured to the tab provided in the glue flap along the margin of the identification band. The identification band is otherwise free from the body panels of the carton blank.

A novel carton embodiment may be erected from the banded blank which includes a body seam at one corner of the carbon. The body seam includes the tab provided in the carton blank glue flap and the perforated identification band end secured thereto. An adhesive secures the outer face of that perforated band margin to the perforated outer face of the band margin secured to the pair of tabs provided along the other body panel. The adhesively bonded tabs and band margins are disposed within the erected carton.

Accordingly, it is an object of this invention to provide a method for permanently securing ends of an identification band to selected areas of a carton blank and providing fixed blank to blank and band to band seals in the carton erected therefrom.

Another object of the invention is to provide a method for substantially permanently securing an identification band to a gift carton until it is desired that the band be physically removed therefrom.

A further object of the invention is to provide a method for sealing an identification band to a gift carton provided with a body seam which does not separate, although the carton is subjected to substantial handling in transit.

Still another object of the invention is to provide a carton blank embodiment to which the sealing method is particularly applicable.

Another object of the invention is to provide a banded carton erected from the novel carton blank with a secure body seam and affixed identification band.

Still other objects and advantages of the invention will, in part, be obvious and will, in part, be apparent from the specification.

The invention accordingly comprises the several steps and the relation of one or more such steps with respect to each of the others, the novel carton blank embodiment, combinations and arrangement of parts which are adapted to effect such steps, and the assembled carton which possesses the characteristics, properties and relation of elements, all as exemplified in the detailed disclosure hereinafter set forth and the scope of the invention will be indicated in the claims.

BRIEF DESCRIPTION OF THE DRAWINGS

For a fuller understanding of the invention, reference is had to the following description taken in connection with the accompanying drawings in which:

FIG. **1** is an isometric view of a banded carton erected from the novel carton blank having an identification band sealed thereto according to the method of the invention;

FIG. **2** is a plan view of the novel carton blank having an identification band sealed thereto in accordance with the invention;

FIG. **3** is a fragmentary plan view of the novel carton blank constructed in accordance with the invention;

FIG. **4** is a plan view of the identification band having perforated margins which is employed in the sealing method;

FIG. **5** is a sectional view of the body seam of the carton shown in FIG. **1** taken along the line **5—5**;

FIG. **6** is a sectional view of the body seam of the carton shown in FIG. **1** taken along the line **6—6**;

FIG. **7** is a sectional view of the body seam of the carton shown in FIG. **1** taken along the line **7—7**;

FIG. **8** is a plan view of another carton embodiment having an identification band sealed thereto in accordance with the invention;

FIG. **9** is a sectional view of the carton erected from the blank shown in FIG. **8** taken along the line **9—9**;

FIG. **10** is a plan view of yet another carton embodiment having an identification band sealed thereto in accordance with the invention;

FIG. **11** is a sectional view of the carton erected from the blank shown in FIG. **10** taken along the line **11—11**.

DESCRIPTION OF THE PREFERRED EMBODIMENTS

Referring now to the drawings in detail, it will be seen that there is illustrated in FIGS. **1** through **7** a carton which is formed in accordance with this invention, the carton being generally referred to by the numeral **12**. Carton **12** may have a decorative appearance provided by a surface treatment thereto. The surface treatment and concomitant decorative appearance make it unnecessary to further wrap the carton when the carton and its content are given as a gift. For purposes of identifying the content and source of the package to the prospective purchaser thereof, the package is provided with an identification band **13** which usually carries advertising indicia related to the content of the package. Since the package may be given as a gift, it is desirable that identification band **13** be initially a permanent part of the carton, but subject to removal after purchase so that it does not detract from the appearance of the package when it is given as a gift. Since it is required that identification band **13** be, at least initially, a permanent part of the carton, it is not merely telescoped over the erect carton and it is therefore necessary that identification band **13** be affixed to the carton blank before that blank is erected into a carton.

Referring particularly to FIGS. **2** and **3**, it will be seen that there is illustrated the details of a blank, which is generally identified by the numeral **14**, from which the carton **12** is formed. The carton blank **14** is preferably formed of paper board provided with a suitable decorative external coating. The manner in which carton blank **14** is decorated forms no part of this invention.

Carton blank **14** is generally rectangular in outline and the central portion thereof is provided with a plurality of fold lines **15, 16** and **17** dividing the central portion of the carton blank **14** into body panels **18, 19,** 20 and **21,** respectively. A pair of tabs **22** and **22'** are attached to body panel **18** along respective fold lines **23** and **23'**. Between tabs **22** and **22'**, there is defined a slot **24.** A glue flap **25** is attached to body panel **21** along a fold line **26.** Defined in glue flap **25** there are a tab **27** and slots **28** and **29** contiguous thereto.

Tab **27** is generally coaxially aligned with slot **24** and registers therewith in erect carton **12,** while tabs **22** and **22'** are generally coaxially aligned with respective slots **28** and **29** and correspondingly register respectively therewith in erect carton **12.**

Carton **12** is provided with suitable closed ends and only top end **30** is illustrated. The ends of carton **12** may be formed in any desired manner, however, it is desirable for the bottom end to be permanently sealed and the top end **30** readily openable and closable for introducing or withdrawing the package content.

Conventional closure means may be employed in the construction of top end **30** and the bottom end of carton **12.** For instance, the bottom end of carton **12** may be formed by providing carton blank **14** with bottom closure flaps **31, 32, 33** and **34** which are separate from one another and which are hingedly connected to respective ones of the body panels **18-21** along a transverse fold line **35.**

The top end **30** of carton **12** is formed by a plurality of closure flaps **36, 37** and **38** which are separate from one another and are connected to respective ones of the body panels **19–21** along a transverse fold line **39.** Details of the various closure flaps are not critical to the operation of the invention.

The carton blank **14** is in a generally flat condition when identification band **13** is adhesively sealed thereto. As best seen in FIGS. **2** and **4,** identification band **13** is an elongated strip **40,** for instance, a foil. Strip **40** extends transversely across body panels **18–21** of carton blank **14** and has one end **41** overlying tab **27** and slots **28** and **29** contiguous therewith. End **41** is permanently secured to tab **27** by means of a suitable adhesive **43.** The other and opposed end **42** of strip **40** overlies tabs **22, 22'** and slot **24** defined therebetween and is permanently secured to tabs **22** and **22'** by adhesive **43.** Strip **40** is of a length d which is coextensive with the distance between free longitudinal ends of respective tabs **27** and **22.** Spaced from respective ends **41** and **42** of strip **40,** respective series of perforations **44** and **45** are provided. The respective series of perforations **44** and **45** are longitudinally located in the margins of the band proximate respective ends **41** and **42** thereof. Strip **40** is secured to the blank at respective tabs **22, 22'** and **27.** Adhesive **43** is generously applied

over the outer surface of tabs **22, 22'** and **27** and opposed ends **41** and **42** of strip **40** are aligned over the respective tabs of the blank. Respective series **44** and **45** of perforations overlie respective, opposed adhesive coated tabs **22, 22'** and **27.** Pressure is applied to opposed margins of the strip and the strip is secured to the opposed tabs. Some adhesive coated on the respective tabs through perforations **44** and **45** provided in strip **40.**

In erecting the carton **12** from the banded blank **14,** adhesive **43** is applied to glue flap **25** and end **41** of strip **40** including the perforated margin thereof. The exterior surface of glue flap **25** will be bonded to the interior surface of the body panel **18** and the exterior surfaces of the margins provided in respective opposed ends **41** and **42** of strip **40** are brought into face to face engagement and securement. When the body portion of the carton blank is bonded together, closure flaps **31–34** may be permanently interlocked to form the bottom end of the carton. After the product is introduced into the erect carton, closure flaps **36–38** may be folded into releasably interlocking engagement.

The strip **40** thus secured initially permanently in place, may be removed from the carton only by purposefully tearing the band **13** from the carton. The securement of band **13** to the carton is achieved by adhesively connecting ends and perforated margins of the strip **40** to the tabs provided in the carton. Band **13** is otherwise free from connecting engagement with body panels of carton **12.** In the erect carton, opposed perforated margins of strip **40** are in face to face engagement and a secure substantially permanent band to band seal is achieved by providing the strip margins with respective series of perforations. In the erect carton, there is substantially a laminate formed consisting of engaged respective tabs and margins of the band. Perforations provided in margins of the band allow the adhesive to flow therethrough for providing a substantially uniform seal between substrate layers of the laminate.

FIGS. **5** through **7** show in detail the construction of body seam **46** of carton **12.** In the erect condition of carton **12,** tab **27** overlies slot **24** and tabs **22** and **22'** respectively overlie slots **28** and **29.** Between respective overlying slots and tabs, band ends **41** and **42** and respective margins thereof are sandwiched and extend interiorly within the carton. Glue flap **25** is adhesively connected to the interior surface of body panel **18** as best seen in FIG. **7.**

Referring now to FIGS. **8** through **11,** it is to be understood that the method of sealing strip **40** may be practiced in connection with various carton blank embodiments. For instance, referring particularly to FIGS. **8** and **9,** a carton blank generally designated by the numeral **50** is provided with a glue tab **51** provided along body panel **52** and a slotted glue flap **53** is provided along and hingedly connected to a body panel **54.** Perforated margin and end **41** of strip **40** overlie tab **51** and are adhesively connected thereto in the manner heretofore described. End **42** and its corresponding perforated margin are secured to walls of glue flap **53** which abut slot **55** provided therein. A carton is erected from the blank **50** in the manner heretofore described and as shown in particular detail in FIG. **9** and a secure blank to band and band to band seal is provided.

Referring once again to FIGS. **10** and **11,** it may be observed that the perforations provided in the band margin may be joined to provide continuous slots **60** and **61** through which adhesive may flow to provide permanent securement of blank to band and band to band in the carton erected therefrom. The carton blank embodiment generally designated as numeral **63** in FIG. **10** may be assemblied as particularly shown in the detail illustrated in FIG. **11.**

According to the sealing method, the erect carton is provided with substantially permanent blank to band and band to band seals. The method may be applied to any generally rectangular gift carton, but it is particularly suited to a carton **12** erected from a particularly constructed blank **14.**

It will thus be seen that the objects set forth above among those made apparent from the preceding description are efficiently attained and since certain changes may be made in carrying out the above method and in the constructions set forth without departing from the spirit and scope of the invention, it is intended that all matter contained in the above description and shown in the accompanying drawings shall be interpreted as illustrative and not in a limiting sense.

It is also to be understood that the following claims are intended to cover all of the generic and specific features of the invention herein described, and all statements of the scope of the invention which, as a matter of language, might be said to fall therebetween.

What is claimed is:

1. A method for sealing ends of an identification band to selected areas of a carton blank and providing fixed blank to blank and band to band seals in the carton erected from said blank, said blank being generally rectangular sheet having fold and cut lines formed therein and defining a plurality of centrally located and adjacent body panels having end forming flaps at opposite ends thereof, and at least one glue flap or tab along one of said body panels, said process comprising serially perforating said identification band along predetermined margins thereof selectively spaced from opposed ends of said identification band, said perforations being longitudinally arranged on each margin of said band and respective series of said perforations located in said margins proximate opposed ends of said band being substantially parallel, extending said identification band transversely across said body panels of said carton blank in overlying relationship to said outer surface thereof, applying glue to said at least one glue flap or tab providing along one of said body panels of said carton blank, affixing a perforated margin of an end of said identification band to said glue flap or tab so as to permit glue applied thereon to leak through said perforations arranged on said identifications band margin, adhesively affixing said other perforated margin of said identification band to said carton blank so as to permit said adhesive to leak through said perforations provided in said margin of said other end of said identification band, said affixed identification band being transversely located across said outer surface of said body panels of said carton blank and being free from said body panels thereof, and erecting said carton blank with said affixed identification band to form a carton therefrom with said opposed perforated margins of said identification band being in face to face adhesive engagement, opposed portions of said carton blank underlying adhesively affixed opposed perforated ends of said identification band being adhesively connected, one to the other in the erect carton.

2. The method of claim 1 wherein said other perforated margin of said identification band is adhesively affixed to the underside surface of said carton blank so as to permit said adhesive to leak through said perforations provided in said margin of said other end of said identification band.

3. The method of claim 2 including in the erecting step adhesively affixing said identification band margin affixed to said glue flap or tab to said affixed other perforated identification band margin adhesively affixed to said underside surface of said carton blank.

4. The method of claim 2 including adhesively securing said other perforated margin of said identification band to at least one glue flap or tab provided along another of said body panels of said carton blank so as to permit said adhesive applied on said at least one glue flap or tab to leak through said perforations arranged on said other margin of said identification band, and erecting said carton blank with sad affixed identification band to form a carton therefrom with said opposed perforated margins of said identification band affixed to respective glue flaps or tabs being in face to face adhesive engagement.

5. The method of claim 1 including the step of connecting said serial perforations provided in said respective margins of opposed ends of said identification band for thereby forming a pair of internal slots located within said respective margins.

* * * * *