US00D915605S

(12) United States Design Patent

Kobayashi et al.

(10) Patent No.: US D915,605 S
(45) Date of Patent: ** Apr. 6, 2021

(54) **ULTRASONIC PROBE**

(71) Applicant: **SOCIONEXT INC.**, Kanagawa (JP)

(72) Inventors: **Mari Kobayashi**, Yokohama (JP); **Kazuyuki Kanazashi**, Yokohama (JP); **Masaya Tamamura**, Yokohama (JP)

(73) Assignee: **SOCIONEXT INC.**, Kanagawa (JP)

(**) Term: **15 Years**

(21) Appl. No.: **29/705,344**

(22) Filed: **Sep. 11, 2019**

(30) **Foreign Application Priority Data**

Mar. 14, 2019 (JP) 2019-005416

(51) **LOC (13) Cl.** **24-02**

(52) **U.S. Cl.**
USPC **D24/187**

(58) **Field of Classification Search**
USPC D24/133, 137, 138, 141, 158, 160, 165, D24/167, 170, 186, 187, 200; D10/57, D10/60, 78, 80
CPC ... A61B 5/0095; A61B 8/4444; A61B 8/4455; G01S 7/5208
See application file for complete search history.

(56) **References Cited**

U.S. PATENT DOCUMENTS

D316,376 S * 4/1991 Dubut D10/103
5,213,103 A * 5/1993 Martin A61B 8/00 600/443
D555,252 S * 11/2007 Kitayama D24/186
D681,823 S * 5/2013 Shinohara D24/186
D701,965 S * 4/2014 Matsumura D24/187
D704,341 S * 5/2014 Ryu D24/187
D705,433 S * 5/2014 Ran D24/187
D745,686 S * 12/2015 Personnelli D24/187
D765,868 S * 9/2016 Pippel D24/187
D861,178 S * 9/2019 Emery D24/187
D887,561 S * 6/2020 Cheng D24/187
2013/0190627 A1* 7/2013 Jun A61B 8/4494 600/472
2017/0343655 A1* 11/2017 Solek G01S 15/8918
2020/0166481 A1* 5/2020 Lin A61B 8/4444

* cited by examiner

Primary Examiner — Susan Bennett Hattan
Assistant Examiner — Omeed Agilee
(74) *Attorney, Agent, or Firm* — McDermott Will and Emery LLP

(57) **CLAIM**

The ornamental design for an ultrasonic probe, as shown and described.

DESCRIPTION

FIG. **1** is a perspective view of an ultrasonic probe, showing our new design;
FIG. **2** is a front side view of the ultrasonic probe;
FIG. **3** is a rear side view of the ultrasonic probe;
FIG. **4** is a top view of the ultrasonic probe;
FIG. **5** is a bottom view of the ultrasonic probe;
FIG. **6** is a right side view of the ultrasonic probe; and,
FIG. **7** is a left side view of the ultrasonic probe.
The broken lines in the drawings depict portions of the ultrasonic probe that form no part of the claimed design.

1 Claim, 5 Drawing Sheets

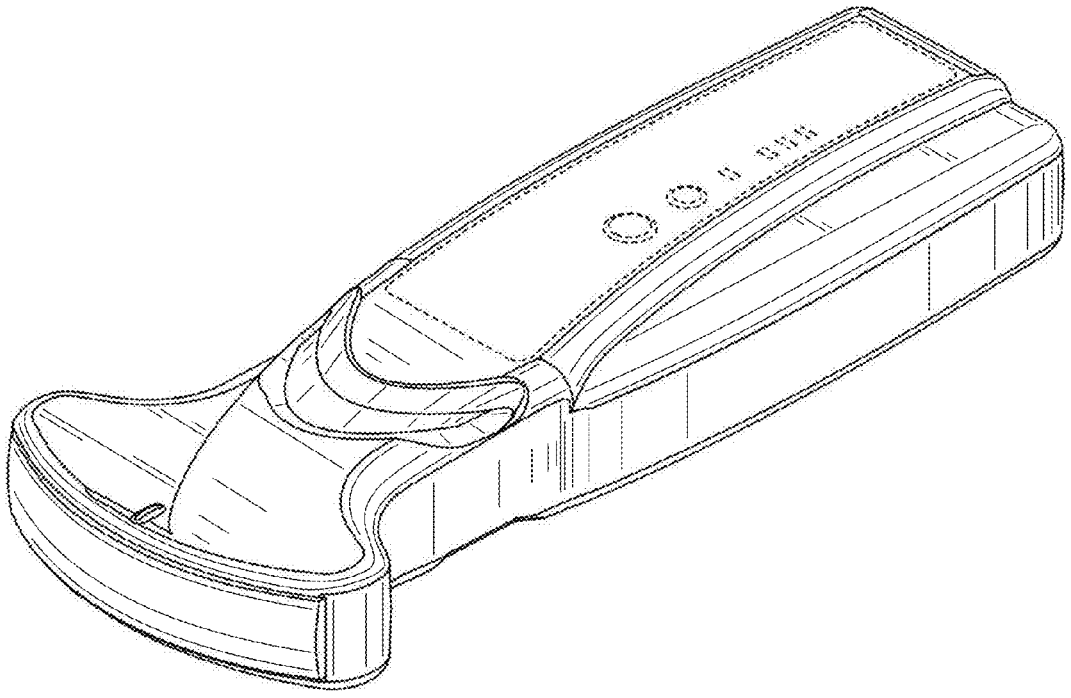

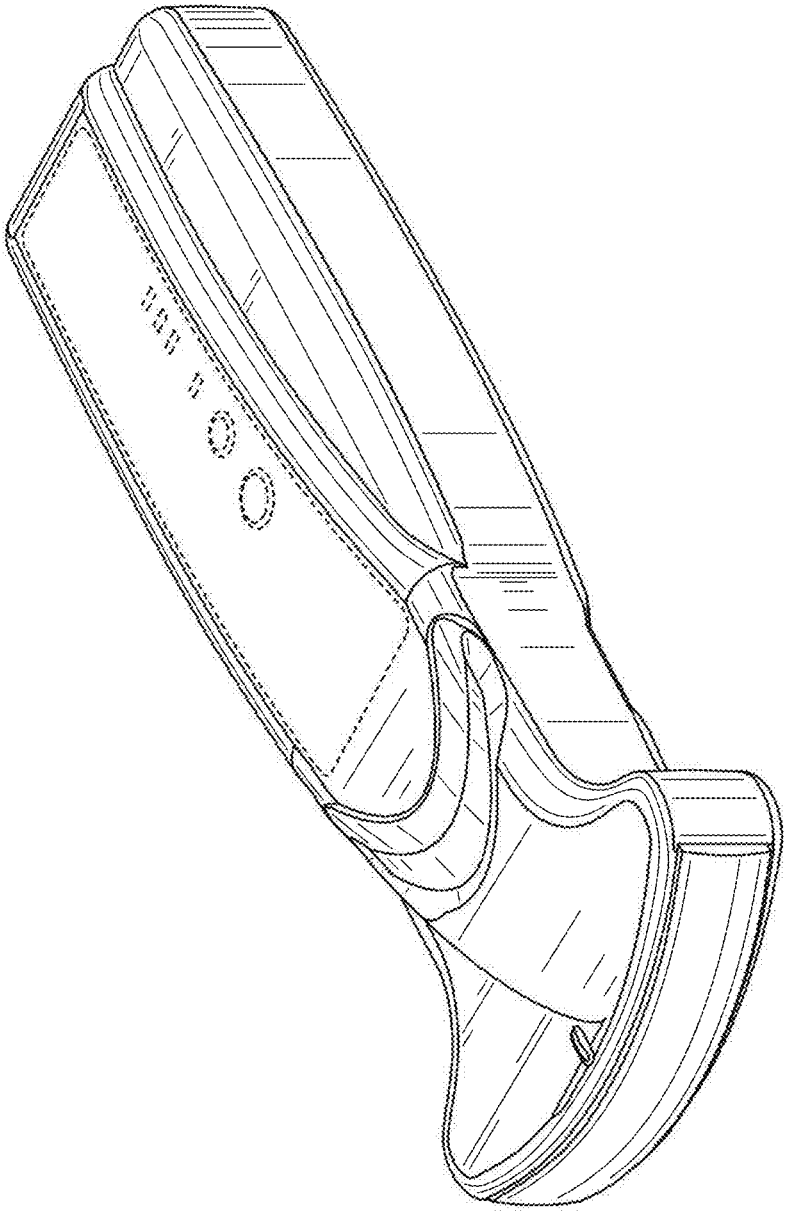

FIG. 1

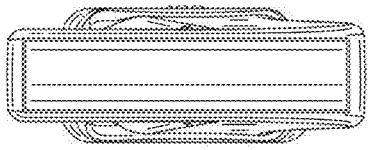

FIG. 2

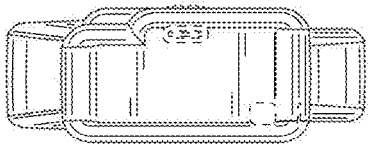

FIG. 3

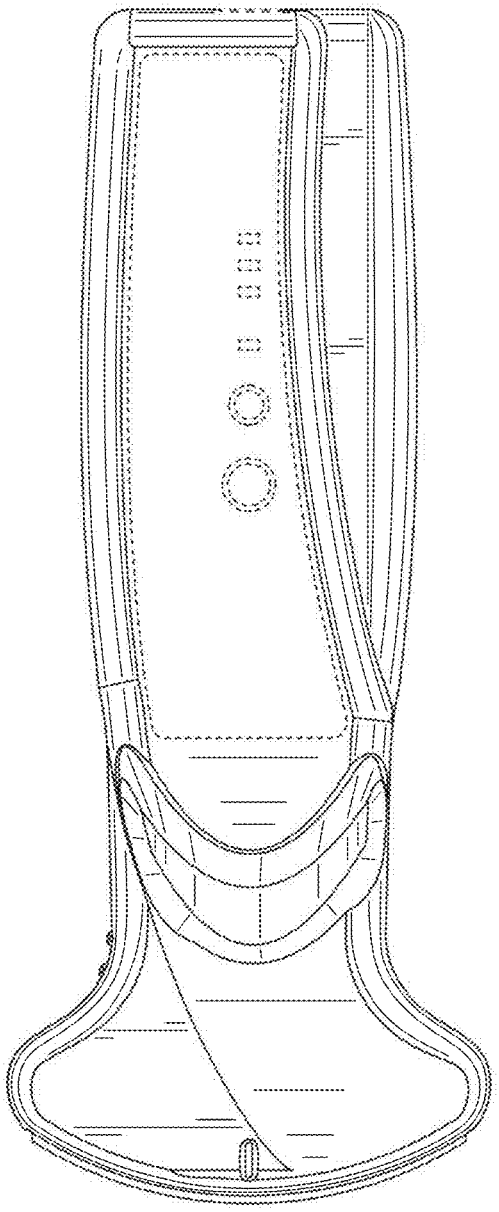

FIG. 4

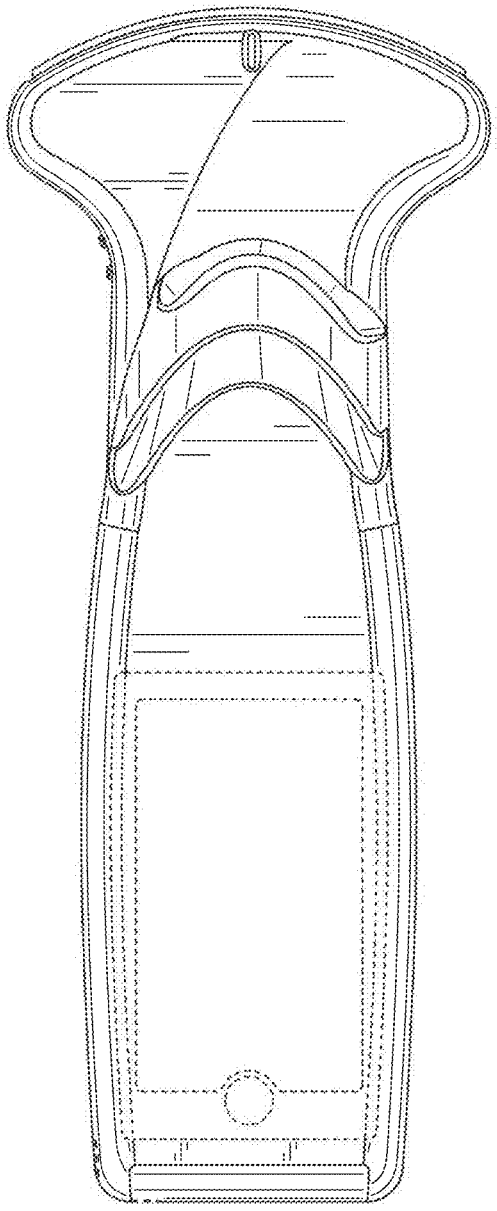

FIG. 5

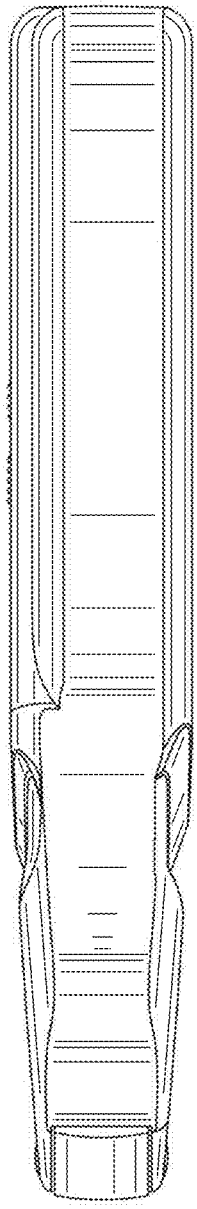

FIG. 6

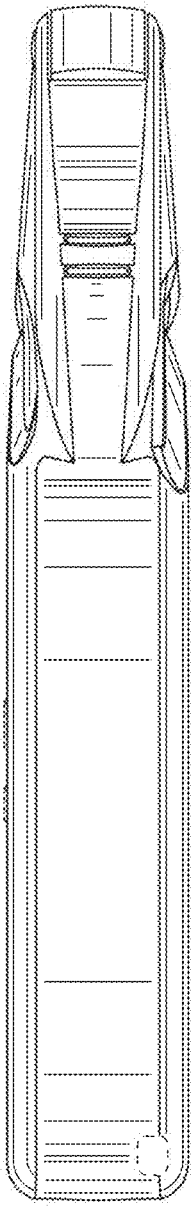

FIG. 7