Dec. 3, 1935. F. HOELKESKAMP 2,022,961

PROCESS FOR THE MANUFACTURE OF ARTIFICIAL SILK

Filed Aug. 23, 1932

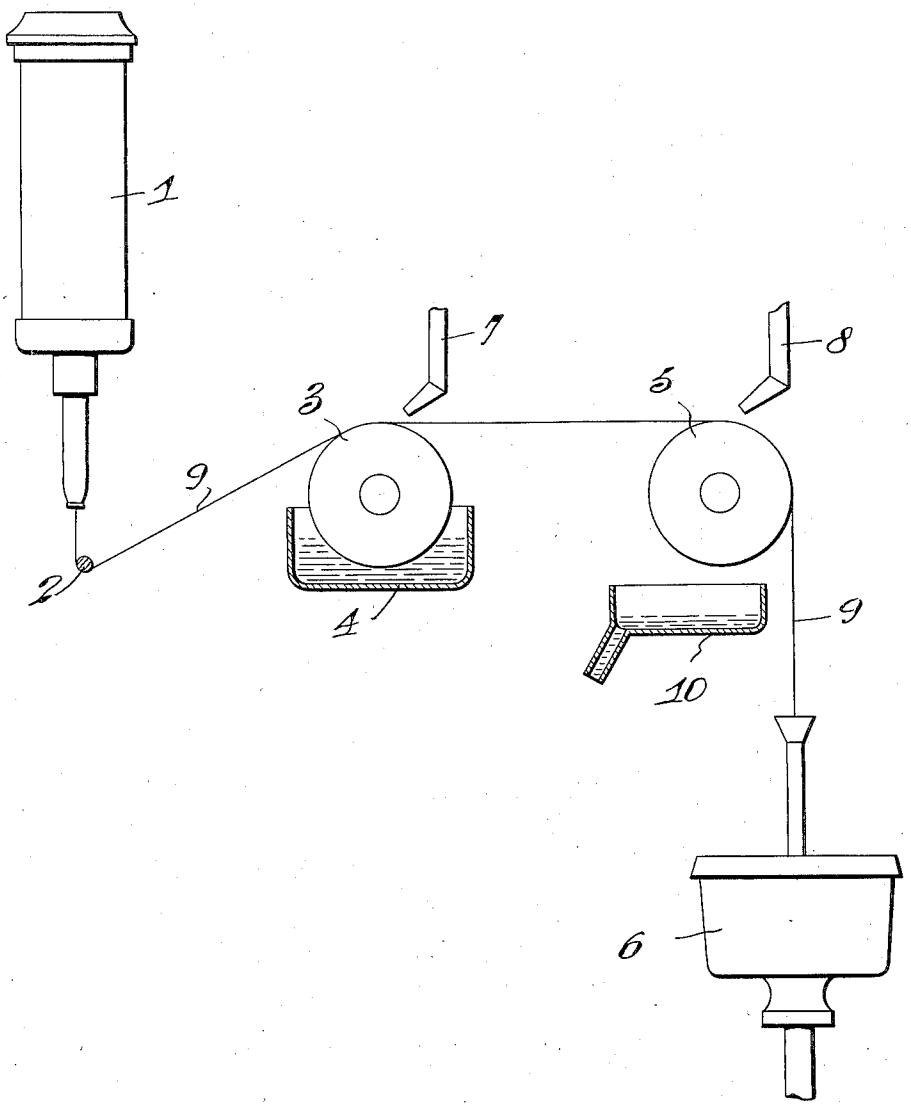

Inventor

Franz Hoelkeskamp

By Thomas H. Byron

Attorney

Patented Dec. 3, 1935

2,022,961

UNITED STATES PATENT OFFICE

2,022,961

PROCESS FOR THE MANUFACTURE OF ARTIFICIAL SILK

Franz Hoelkeskamp, Wuppertal-Barmen, Germany, assignor to American Bemberg Corporation, New York, N. Y., a corporation of Delaware

Application August 23, 1932, Serial No. 630,138
In Germany September 23, 1931

1 Claim. (Cl. 18—54)

The present invention concerns a process for manufacturing dull lustre artificial silk, of the type wherein the filaments are treated by means of agents acting upon the outer surfaces thereof.

A process has already been proposed in which the formed filaments are subjected to the action of insoluble precipitates. Artificial silk thus treated possesses a dull appearance. However, it has been found that filaments and threads so treated lose their dull appearance in a short time, especially after repeated washings. This removal of the dull lustre is not even throughout the body, and therefore a very objectionable product results.

In accordance with the present invention, it has been found that a very uniform and constant delustering of a thread may be obtained, if a precipitate in a state of very fine dispersion is produced on the freshly precipitated, but not yet completely coagulated, product.

In order to accomplish this, use is made of water soluble metallic salts of the type which may, simultaneously with the coagulation of the thread, be precipitated thereon in a very fine dispersion. This formation of a precipitate is accomplished by means of a chemical conversion brought about by the acid present in the coagulating bath.

It has been found advantageous to treat the filaments with the soluble metallic salts prior to the coagulation thereof, and thus produce the precipitate during the filament coagulation step.

Two great advantages arise from this new process, in that the procedure is much more simple than heretofore, and an especially durable low lustre may be obtained. There is no complication of the ordinary spinning process since it is only necessary to apply the soluble metallic salt at a point before the deacidifying device, in the event that the cuprammonium process is to be used, for example:

The use of a water soluble solution of barium salt has proven very advantageous. Through its conversion by the sulphuric acid serving for the deacidification of the thread, it yields a solid precipitate of barium sulphate. Barium sulphate is particularly suitable as a dulling agent because it is a salt which is only very slightly soluble in neutral as well as in basic and acid solutions, and which also is very resistant to chemical attacks.

The process may be used to great advantage in the stretch spinning process, whereby the thread is passed over a number of stretching devices, for example rollers arranged in series. These devices may be, and usually are driven with varying speeds and so exercise a stretching effect upon the thread. In this process the deacidifying is generally performed on the second stretching device, for example by means of spraying. According to the present process, the metallic salt solution is applied to the first roller, either by means of spraying or through the arrangement of a container below the roller into which the stretching device dips; the roller carrying along a thin layer of liquid and moistens the filament.

In order to remove the precipitates formed in the course of operation on the first stretching device, and which are harmful to the filament, it is advisable to add acid to the metallic salt solution. Such acids should be used which have no chemical effect on the metallic salt solutions, but which exercise a dissolving action upon the precipitates.

If a solution of barium chloride is used, it is advisable to add the use of diluted hydrochloric acid. The hydrochloric acid should be applied so as to dissolve the water-insoluble copper compounds precipitating on the roller.

Compared to the processes hitherto used, the present process offers an important advantage in that the precipitate is especially resistant to repeated washing, mechanical stressings by means of rubbing, etc. The reason for this is that the precipitate is not produced on the completely coagulated thread but on the incompletely coagulated thread. The increased durability of the precipitate may apparently be explained by the manner in which the dulling agent penetrates somewhat into the still plastic surface of the capillary filament, in order to adhere to the thread even more firmly after the formation of the precipitate, and the final hardening of thread after the deacidifying.

The drawing shows a modification of the invention.

The thread **9**, formed in the usual manner in a spinning funnel **1** containing a flowing precipitating liquid, is led to the centrifuge **6** by way of a roller **3** and a second roller **5**, after it has left the funnel and has been led around the usual rod **2**. Above the roller **3** a pipe **7** for the metallic salt solution is arranged, which solution is supplied to the thread in drops. The solution accumulates in a vat **4** arranged below the roller. In order to make doubly sure that the thread is subjected to the solution, the vat is arranged in such a way that the roller always dips into the bath contained therein. The roller is

thus moistened with a liquid which is continuously supplied to the thread during the rotation of the roller. The usual deacidifying is performed through a supply of acid by means of a pipe **8** arranged above the second roller **5**.

The method of operation is the following: The threads freshly precipitated in the precipitating bath still contain certain quantities of carbonates and sulphates, which originate from the spinning solution and which have not entirely been removed from the thread through the precipitating bath contained in the funnel. These substances and the barium chloride supplied become converted, on the roller **3**, into barium sulphate and barium carbonate. After leaving the roller **3** a considerable portion of thread is still loaded with a soluble barium salt. During the deacidifying of the thread on the roller **5** this barium salt is entirely converted into barium sulphate through the action of the sulphuric acid. Also, the small quantities of barium carbonate are simultaneously converted into barium sulphate.

The degree of dullness depends upon the quantity of barium sulphate precipitated on the thread. The latter depends upon the concentration of the barium chloride solution supplied to the thread, and the content of sulphate and carbonate in the thread. The degree of dullness can be changed in the simplest manner through varying the concentration of the barium solution supplied or through varying the content of sulphate of the spinning solution. It is advisable to choose the concentration of the barium chloride solution between 0.2 and 5.0%; the dullness increases in proportion to the increase of concentration.

Having now set forth the present invention, as required by the patent statutes, what it is desired to claim is:

A process of delustering regenerated cellulose filaments which comprises spinning a solution of the group consisting of viscose and cuprammonium cellulose under stretching to form filaments, precipitating said filaments in the presence of water-soluble metal salt, and subsequently coagulating said filaments with a compound containing one or more acid hydrogen atoms, said metal salt and compound being able to form a water-insoluble precipitate.

FRANZ HOELKESKAMP.