April 5, 1927. 1,623,158

F. L. BLEVIN ET AL

CARDBOARD BOX KNIFE

Filed Aug. 16, 1924

Fig. 1

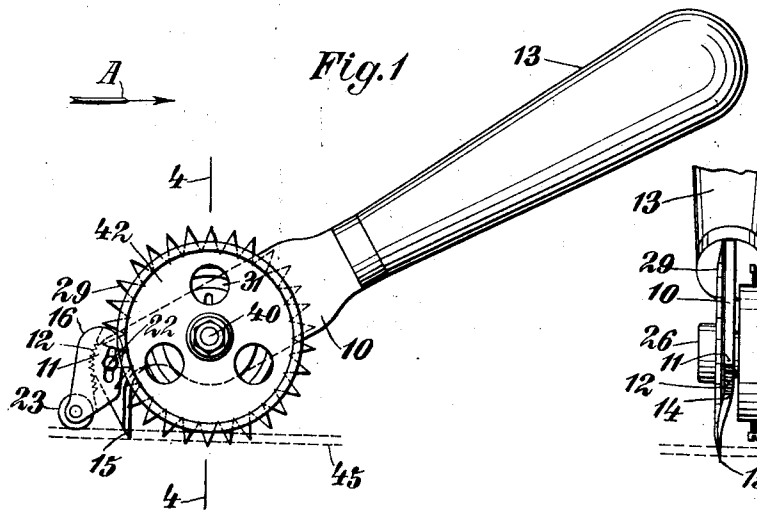

Fig. 3

Fig. 2

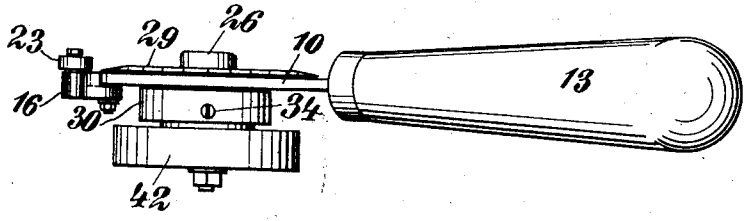

Fig. 4

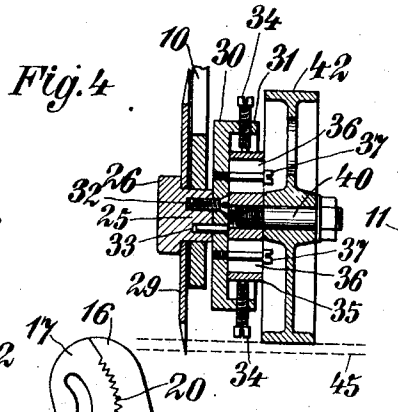

Fig. 5

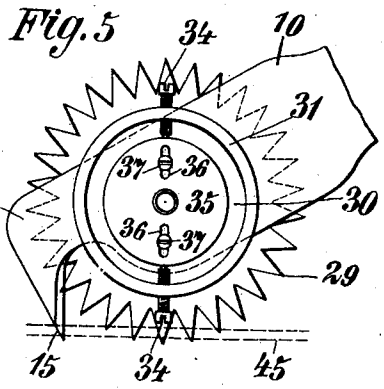

Fig. 6

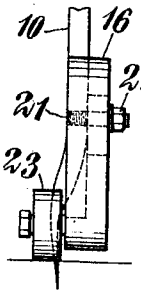

Fig. 7

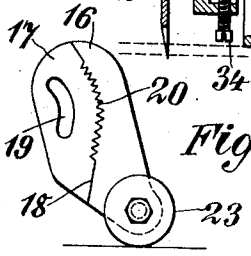

INVENTORS
Frederick L. Blevin and
Andrew D. Ferguson.
BY Ade Bonneville
ATTORNEY

Patented Apr. 5, 1927. 1,623,158

UNITED STATES PATENT OFFICE.

FREDERICK L. BLEVIN, OF JERSEY CITY, NEW JERSEY, AND ANDREW D. FERGUSON, OF BROOKLYN, NEW YORK.

CARDBOARD-BOX KNIFE.

Application filed August 16, 1924. Serial No. 732,482.

This invention relates to a cardboard box knife. Its object is the production of a knife which will quickly cut the cardboard of a box with a clean cut, without injuring the contents thereof. A second object is the production of a knife, which can be adjusted to cut through different thicknesses of cardboard or other material, so that the cutting blade of the knife will cut the cardboard without coming in contact with objects below the same.

The organization of the invention comprises a knife and perforating wheel respectively supported and journaled on an axle. The cutting edge of the knife and the perforating wheel are in the same plane. The wheel perforates the cardboard or other material operated upon, ahead of the cut of the knife. The axle is fastened to a guide bracket and to the latter is adjustably secured a hub. An axle extends from the hub and on the latter is journaled a guide and supporting wheel. A roller is also provided for the blade, which with the guide and supporting wheel maintains the cutting edge of the knife blade in proper position.

In the accompanying drawings Fig. 1 represents a side view of a knife having the invention incorporated therein; Fig. 2 shows a top plan view of Fig. 1; Fig. 3 indicates a partial left hand side view of Fig. 1 with an element omitted; Fig. 4 is a section of Fig. 1 on the line 4, 4; Fig. 5 represents a right hand side view of Fig. 4 with an element omitted and a slight modification; Fig. 6 indicates an enlarged right hand side view of a portion of Fig. 1 and Fig. 7 shows a left hand side view of a portion of Fig. 6.

The knife comprises the knife blade 10 having the curved nose 11 with the teeth 12 at one end, and the handle 13 at the other end. The nose 11 is curved at 14 to locate the cutting edge 15 in proper position.

A bracket 16 is shown with the recessed portion 17 forming the wall 18 in the bracket, at right angles to said recessed portion. An elongated opening 19 is formed in the recessed portion 17 and teeth 20 are formed in the wall 18 which mesh with the teeth 12 of the nose 11. A stud 21 is secured to the nose 11, and extends through the elongated opening 19. A nut 22 for said stud provides means to clamp the bracket 16 to the nose 11. A roller 23 is journaled to the lower end of the bracket 16. The bracket 16 can be clamped in different positions to the nose 11 to locate the roller 23 at different levels.

An axle 25 with the enlarged head 26 supports the knife blade 10. A perforating wheel 29 is journaled on the axle 25, and its plane is in line with the cutting edge 15. A disc bracket 30 with the annular flange 31 is fastened to the end face of the axle 25, by means of the screw 32 and the dowel pin 33. A pair of oppositely positioned adjusting screws 34 extend through the flange 31. A hub 35 has formed therein the oppositely positioned guide openings 36. Guide screws having the heads 37 extend through the openings 36 and are in threaded engagement with the disc bracket 30. The guide screws maintain the hub 35 against the face of the disc bracket 30. An axle 40 has one in threaded engagement with the hub 35, and has journaled therein a guide and supporting wheel 42. The cardboard or other material through which the knife cuts is indicated at 45.

To use the knife it is held by the operator in the position best shown in Fig. 1 with the roller 23 and the wheel 42 bearing on the cardboard 45 of the box or container to be cut, and drawn in the direction of the arrow A.

The perforating wheel 29 will insert a series of openings in the cardboard to provide a path for the cutting edge 15 of the knife blade 10. The roller 23 and the supporting wheel 42 maintain the cutting edge 15 at the proper depth below the top surface of the cardboard, and the roller 23 also smooths the surface of said cardboard adjacent to the cut made therein. To adjust the knife for various thicknesses of cardboard to be cut, the distance between the axial center lines of the axles 25 and 40 is adjusted, by means of the adjusting screws 34 and the screws having the heads 37. The latter screws are first unscrewed, and then one of the screws 34 is unscrewed and the other screw 34 is turned to locate the hub 35 with respect to disc bracket 30 in the required position. Finally the screws with the heads 37 are again screwed in place. By this means the longitudinal axes of the axles 25 and 40 are located coincident with each other or separated from each other. At the same time the bracket 16 is clamped in proper position to the nose 11 of the knife blade 10, by

means of the stud 21 and the nut 22. By this means the lower end of the cutting edge 15 and the periphery of the perforating wheel 29, will be located in proper position with respect to the periphery of the wheel 42 and the roller 23, to cut the cardboard to just the depth required. The knife may be used without the bracket 16 and its roller 23, in which case the teeth 12 in the nose 11 may be omitted as indicated in Fig. 5. The knife may also be used without the perforating wheel 29.

Various modifications may be made in the invention and the present exemplification is to be taken as illustrative and not limitative thereof.

Having described our invention what we desire to secure by Letters Patent and claim is:—

1. In a knife of the character described the combination of a knife blade, a guide and supporting wheel for the knife blade, means to adjust the location of the supporting wheel and a roller adjustably connected to the knife blade.

2. In a knife of the character described the combination of a knife blade, teeth formed in an edge of the knife blade, a bracket having teeth meshing with the teeth of the knife blade and adjustably clamped thereto and a rotatable guide and supporting wheel adjustably connected to the knife blade.

3. In a knife of the character described the combination of an axle, a perforating wheel journaled on the axle, a knife blade supported on the axle having a cutting edge in the plane of the perforating wheel and a rotatable supporting wheel for the knife.

4. In a knife of the character described the combination of an axle, a perforating wheel journaled on the axle, a knife blade supported on the axle having a cutting edge in the plane of the perforating wheel, a bracket adjustably clamped to the knife blade and a roller journaled to said bracket.

5. In a knife of the character described the combination of an axle, a perforating wheel journaled on the axle, a knife blade having a cutting edge supported on the axle, a rotatable guide and supporting wheel for the knife, adjustable supporting means between the said axle and said wheel to vary the location of the axis of said wheel to adapt the perforating wheel and cutting edge of the knife to various thicknesses of material to be cut.

6. In a knife of the character described the combination of an axle, a perforating wheel journaled on the axle, a knife blade supported on the axle, a disc bracket fastened to the axle, a hub adjustably connected to said bracket and a guide and supporting wheel journaled to the hub.

7. In a knife of the character described the combination of an axle, a perforating wheel journaled on the axle, a knife blade supported on the axle, a disc bracket having an annular flange fastened to the axle, a hub with guide openings bearing against the disc bracket, guide screws extending through said guide openings and supported in the disc bracket, adjusting screws extending through the flange of the disc bracket and bearing against said hub, an axle extending from said hub and a guide and supporting wheel journaled on the latter axle.

Signed at the borough of Manhattan, city of New York, in the county of New York and State of New York this 28th day of July A. D., 1924.

FREDERICK L. BLEVIN.
ANDREW D. FERGUSON.