United States Patent [19]

Smith et al.

[11] **Des. 244,154**

[45]** **Apr. 26, 1977**

[54] **PORTABLE DEFIBRILLATOR**

[75] Inventors: **David B. Smith,** Mercer Island; **James A. Benson,** Bellevue; **Paul W. Jones,** Bothell, all of Wash.

[73] Assignee: **Physio-Control Corporation,** Redmond, Wash.

[**] Term: **14 Years**

[21] Appl. No.: **720,116**

[22] Filed: **Sept. 3, 1976**

[51] **Int. Cl.** ..... **D24—01;** D24—02

[52] **U.S. Cl.** ..... **D83/1 F**

[58] **Field of Search** ..... 128/419 D, 2.06 E, 404, 128/2.05; D83/1 F

[56] **References Cited**

U.S. PATENT DOCUMENTS

3,196,877	7/1965	Corbin	D83/1 F
3,865,101	2/1975	Saper et al.	128/419 D
D. 229,638	12/1973	Kawaguchi	D83/1 F

OTHER PUBLICATIONS

Aloe Hosp. Cat. No. 230, c. 1966, p. 88, Synchronizer and DC/150 Defibrillator.

Primary Examiner—Bernard Ansher
Attorney, Agent, or Firm—Orland M. Christensen

[57] **CLAIM**

The ornamental design for a portable defibrillator, as shown.

DESCRIPTION

FIG. **1** is a front perspective view of a portable defibrillator showing our new design;
FIG. **2** is a top plan view thereof;
FIG. **3** is a front elevational view thereof;
FIG. **4** is a right side elevational view thereof;
FIG. **5** is a left side elevational view thereof;
FIG. **6** is a rear elevational view thereof; and
FIG. **7** is a bottom plan view thereof;

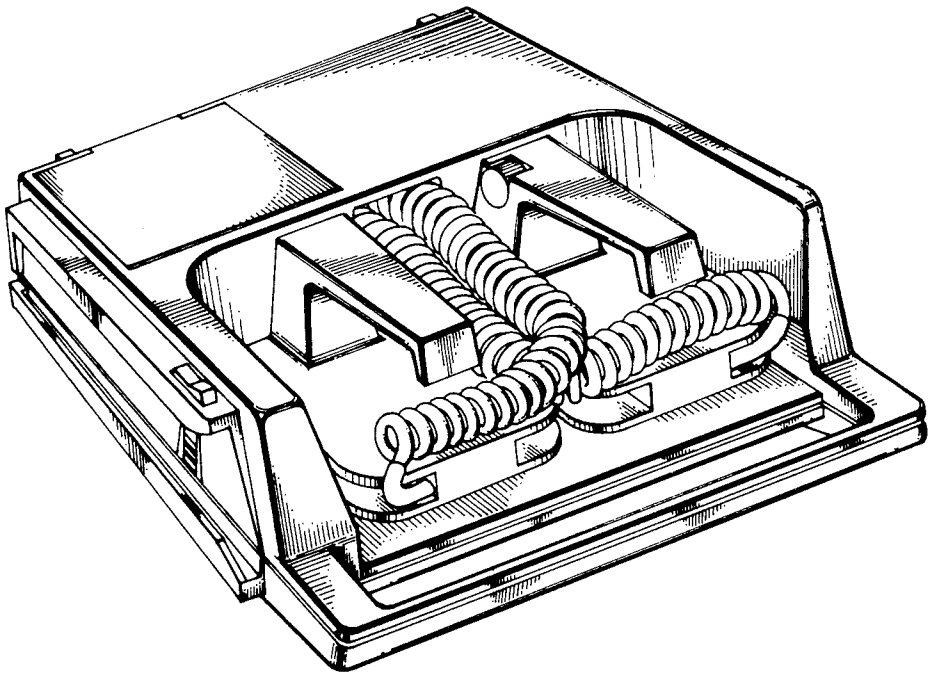

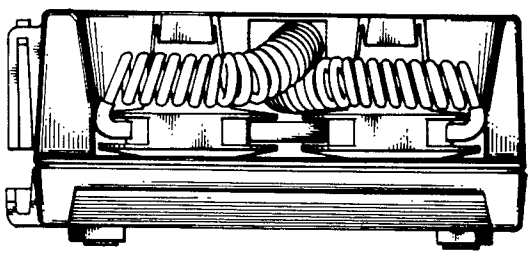

Fig. 1

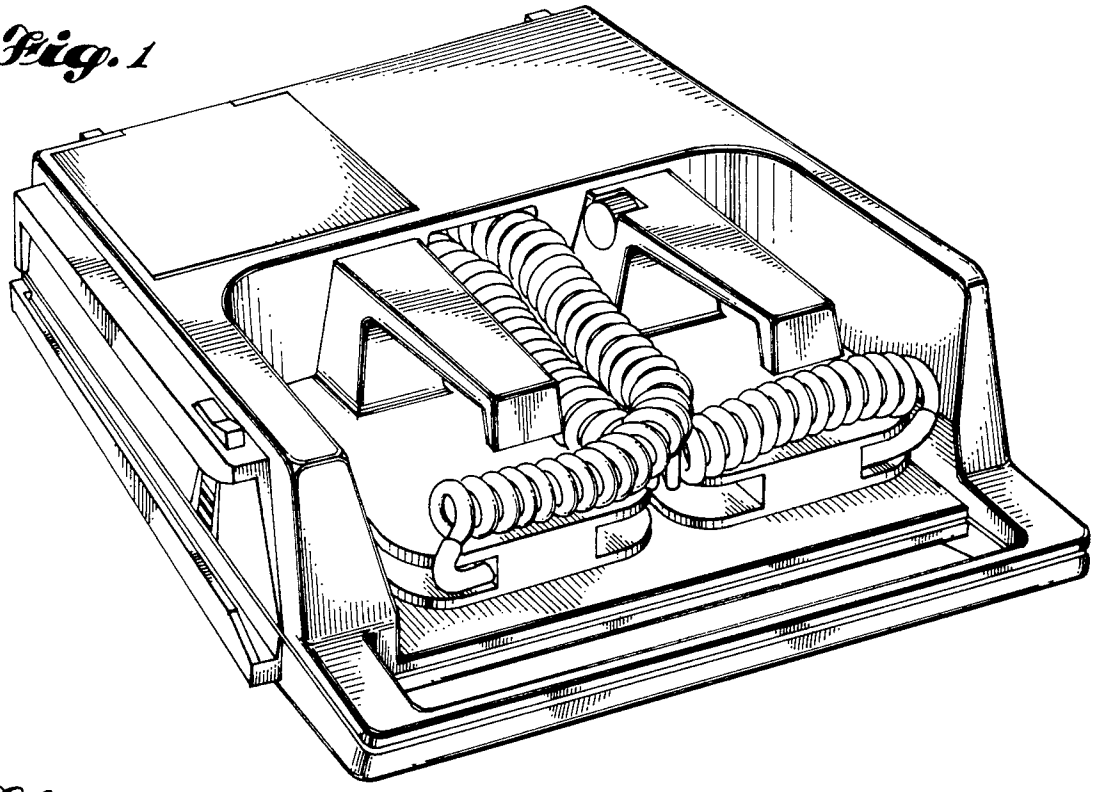

Fig. 2

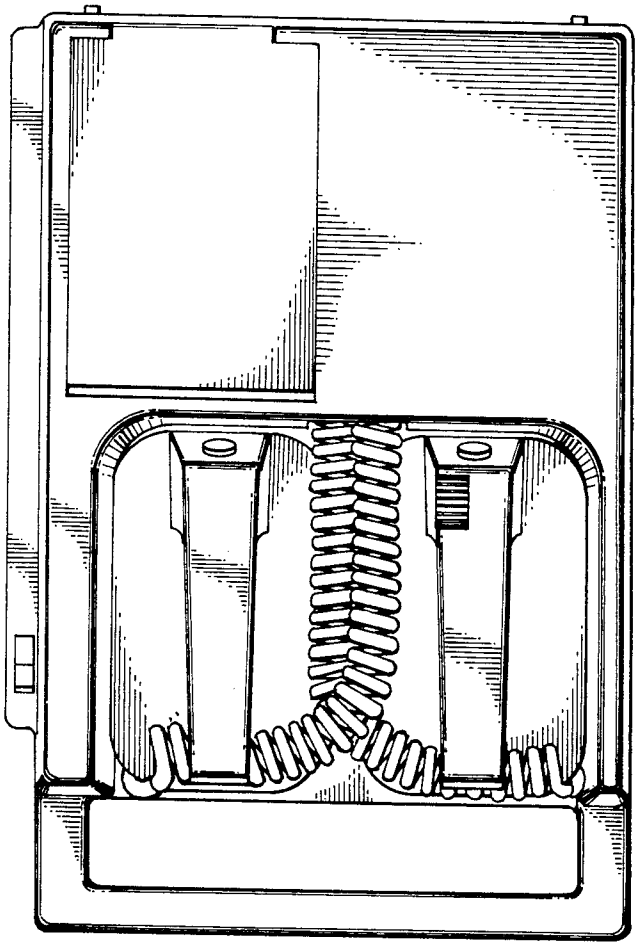

Fig. 3

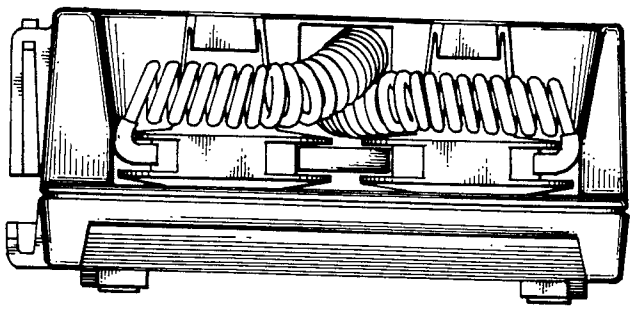

Fig. 4

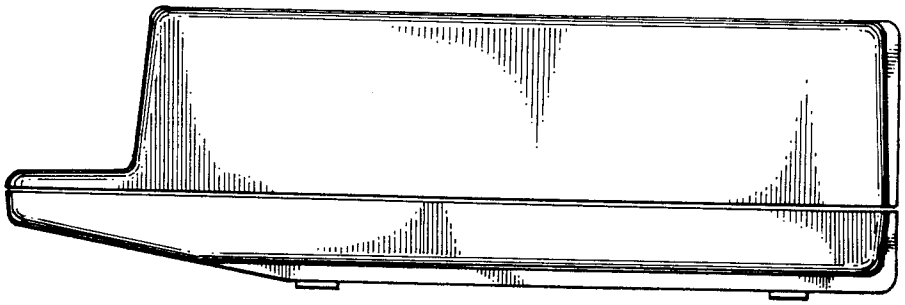

Fig. 5

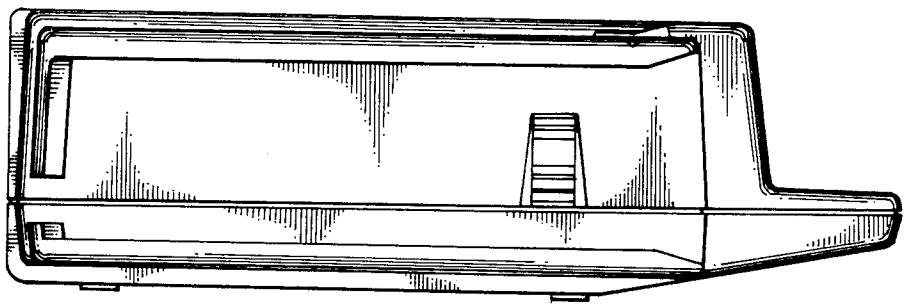

Fig. 6

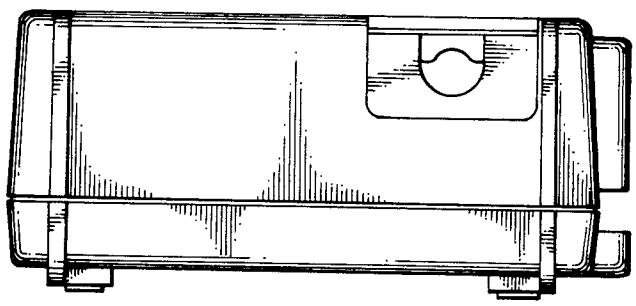

Fig. 7

