# United States Patent [19]

**Kellner**

[11] **3,806,082**

[45] **Apr. 23, 1974**


[54] **POWER KELLY COCK**


[75] Inventor: **Jackson M. Kellner**, Midland, Tex.

[73] Assignee: **Smith International, Inc.**, Midland, Tex.



[22] Filed: **Jan. 24, 1972**

[21] Appl. No.: **220,292**

[52] **U.S. Cl.** ..... **251/58**, 92/106, 251/62

[51] **Int. Cl.** ..... **F16k 31/143**

[58] **Field of Search** ..... 137/496; 166/224; 175/218; 251/58, 62, 340; 92/106; 173/57



[56] **References Cited**

UNITED STATES PATENTS

| | | | |
|---|---|---|---|
| 2,835,227 | 5/1958 | Gamet | 92/106 |
| 3,433,252 | 3/1969 | Kennard | 137/496 |
| 3,439,925 | 4/1969 | Sampson | 92/106 X |
| 3,690,615 | 9/1972 | Rogers | 251/58 |



*Primary Examiner*—Henry T. Klinksiek



[57] **ABSTRACT**

A power kelly cock comprises a ball type plug valve for permitting or preventing the transmission of drilling fluid through a kelly and a powered actuator. The powered actuator includes a motor, which is fluid pressure driven, and a transmission means connecting the motor to the kelly cock. The motor, which does not rotate, includes a reciprocating portion and a stationary portion, e.g., piston and cylinder or vice versa.

The transmission means includes a translating means for converting reciprocating motion of the motor to rotation of the core of the valve. The translating means rotates with the kelly cock. The transmission means further includes a rotary connection for connecting the translating means to the motor. The rotary connection allows the motor to be non-rotating so that it can remain connected by hose lines to a source of pressure fluid while the kelly cock and the translating means rotate.

Thrust means is provided connecting the stationary portion of the motor to the swivel housing or swivel sub or the kelly cock body. If such thrust means connects the stationary portion to a rotating member such as the swivel sub or kelly cock body, it includes a rotatable connection.


**32 Claims, 12 Drawing Figures**

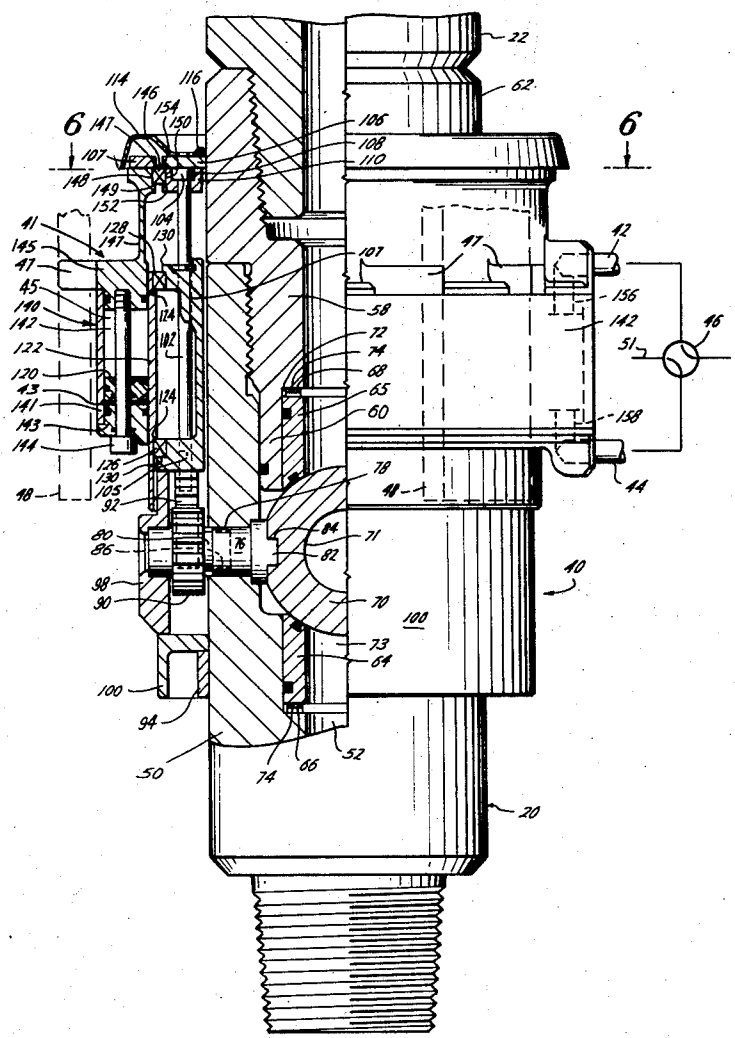

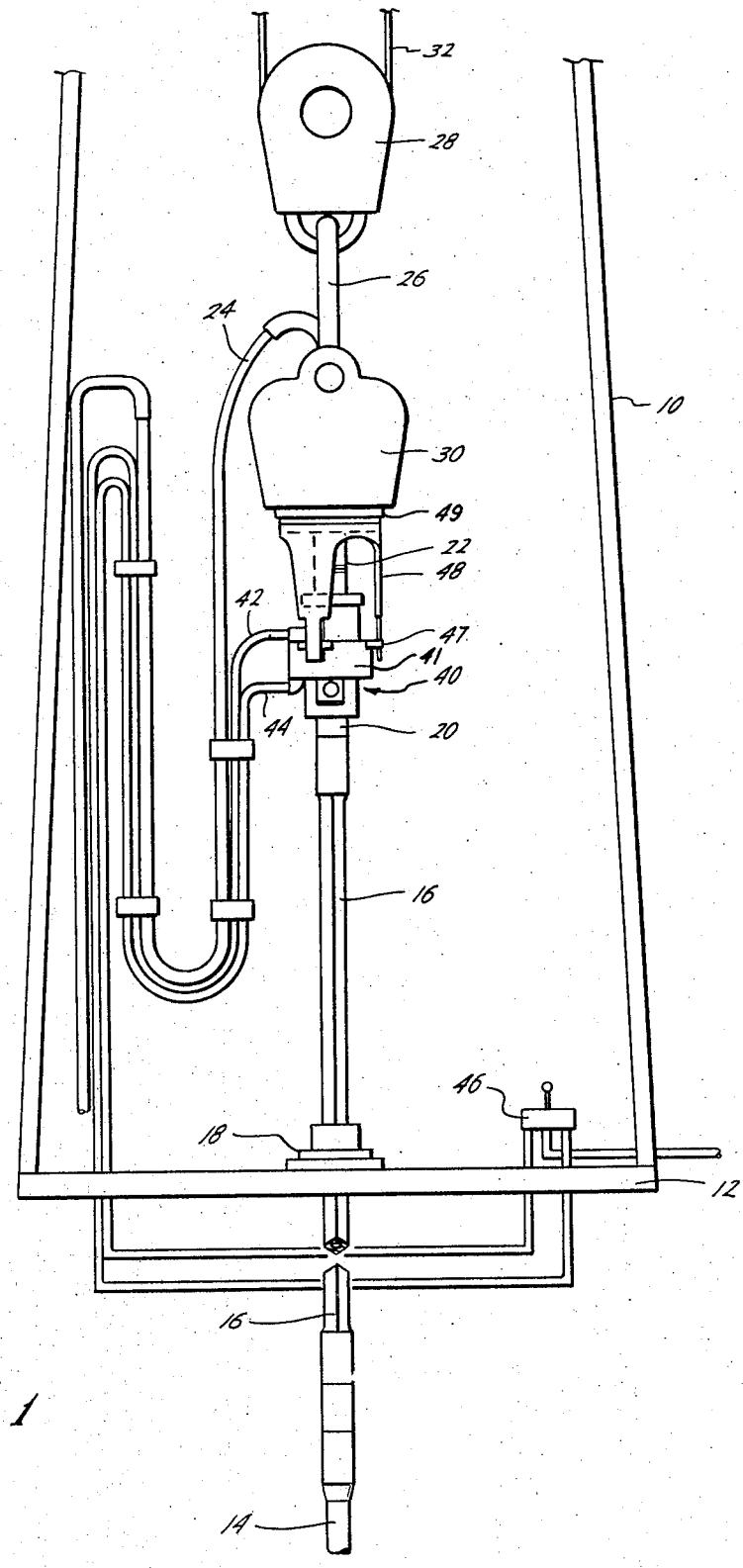


Fig. 1

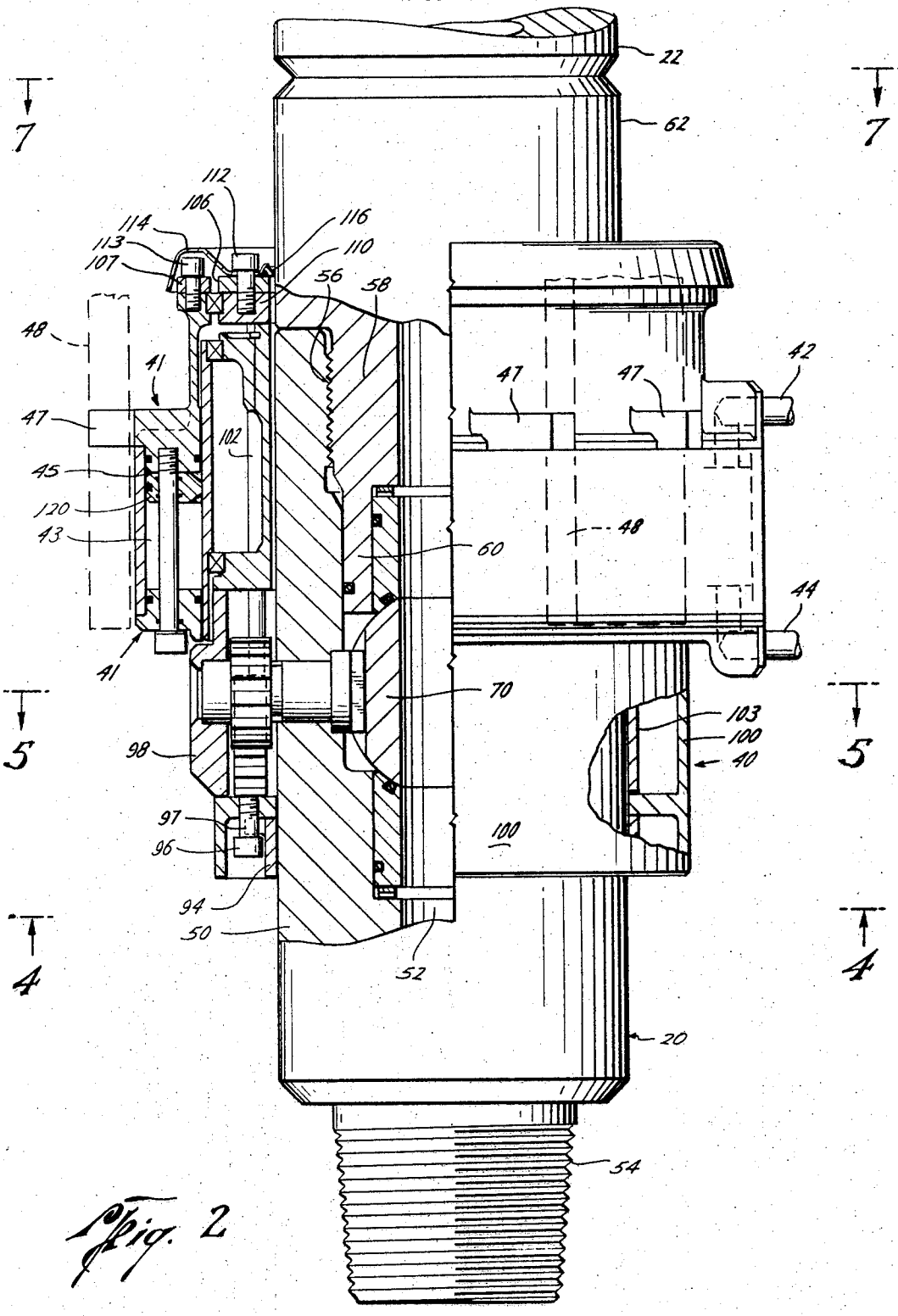
22
62
7
7
112
106
114
113
107
116
110
56
58
48
41
47
102
45
120
43
41
47
47
42
48
60
44
70
103
100
40
5
5
98
97
96
94
50
52
100
4
4
20
54

Fig. 2

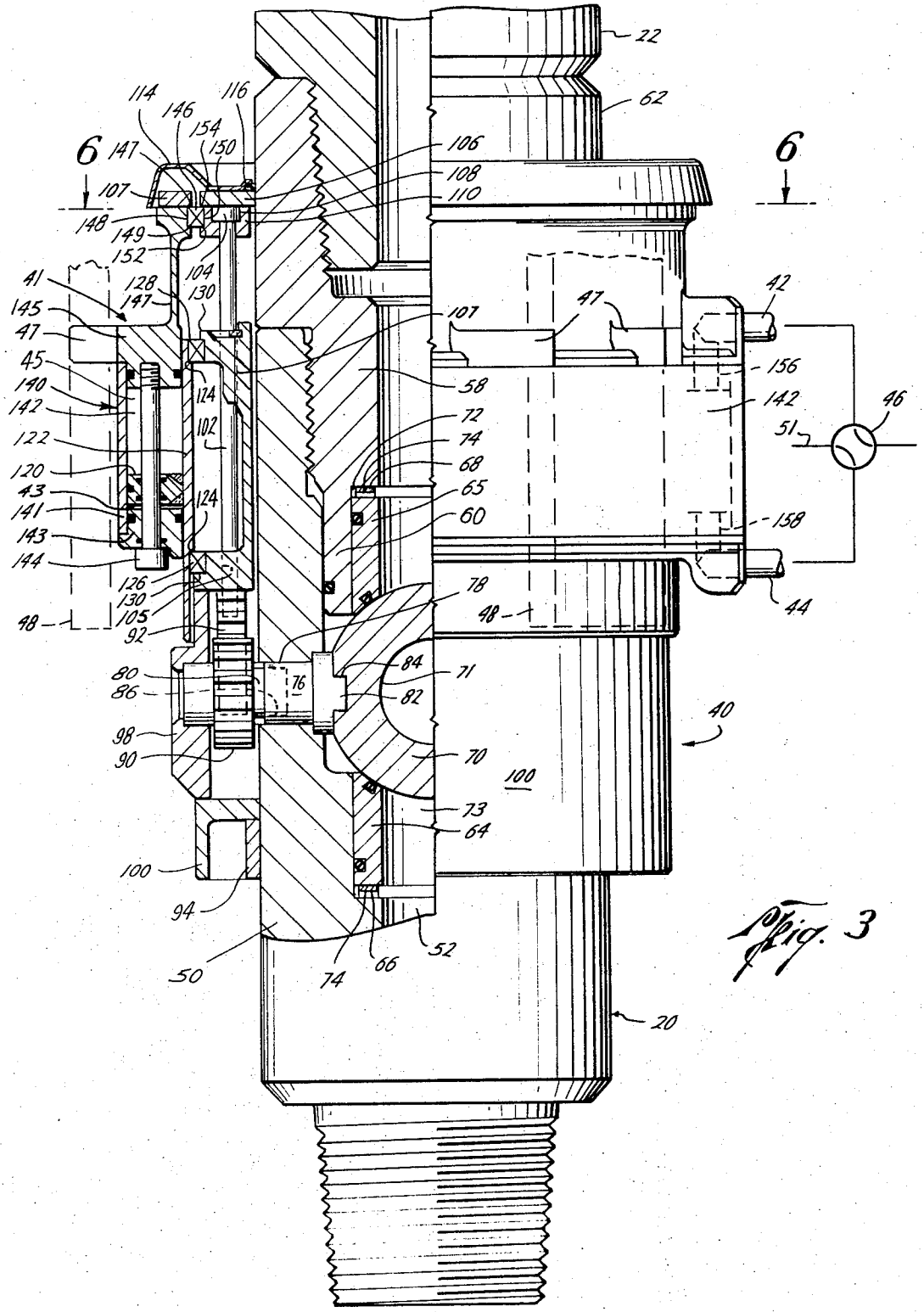
22
62
6
6
114
146
116
154
150
147
106
108
110
107
148
149
152
104
41
128
147
130
145
47
45
140
142
124
102
122
120
43
141
124
143
144
126
130
105
92
48
107
47
42
156
58
142
46
51
72
74
68
65
60
158
78
48
44
80
86
76
84
71
82
40
98
90
70
100
73
64
100
94
50
74
66
52
20

Fig. 3

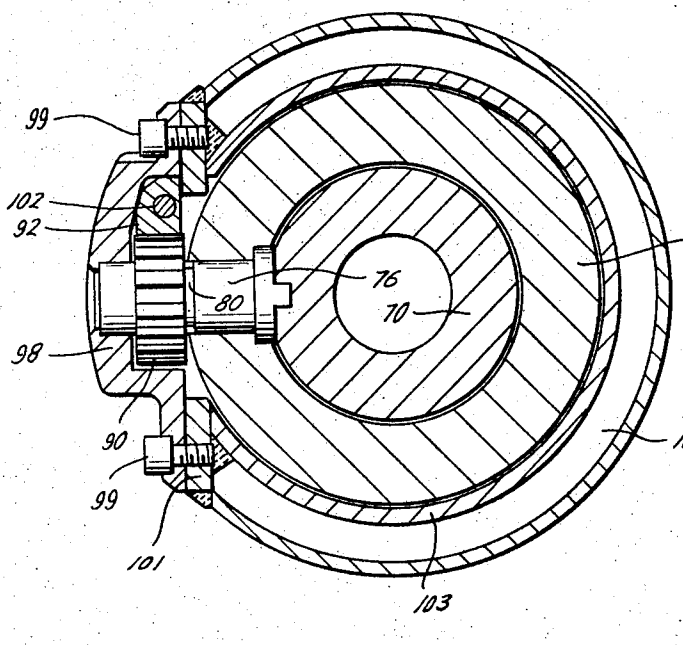
99
102
92
98
90
99
101
80
76
70
50
100
103

Fig. 5

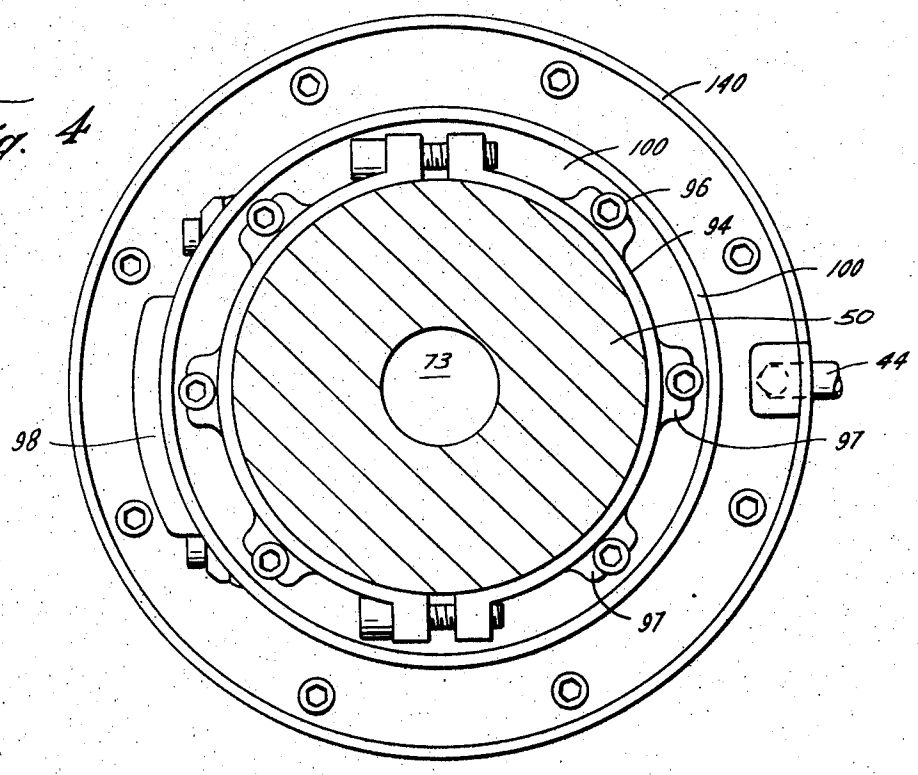
140
100
96
94
100
50
44
97
98
97
73

Fig. 4

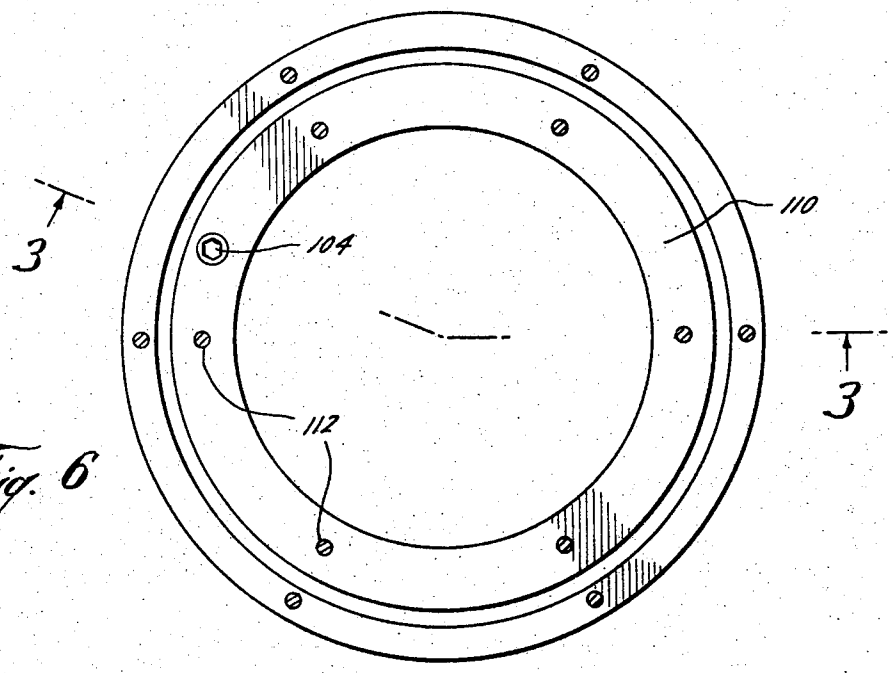


Fig. 6

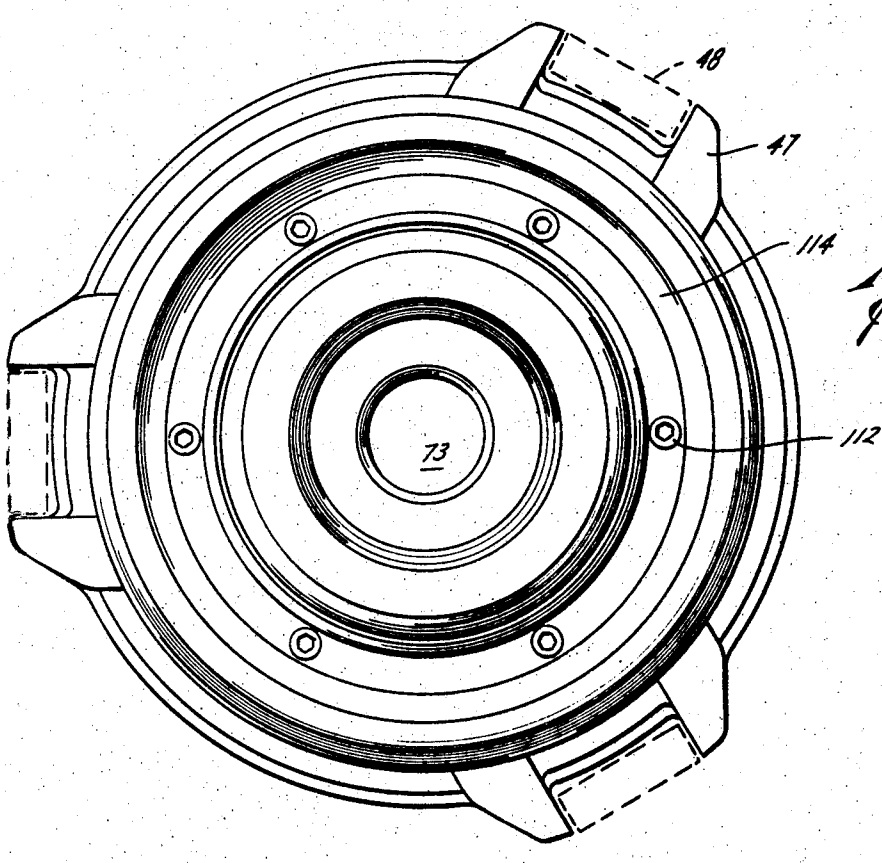


Fig. 7

Fig. 8

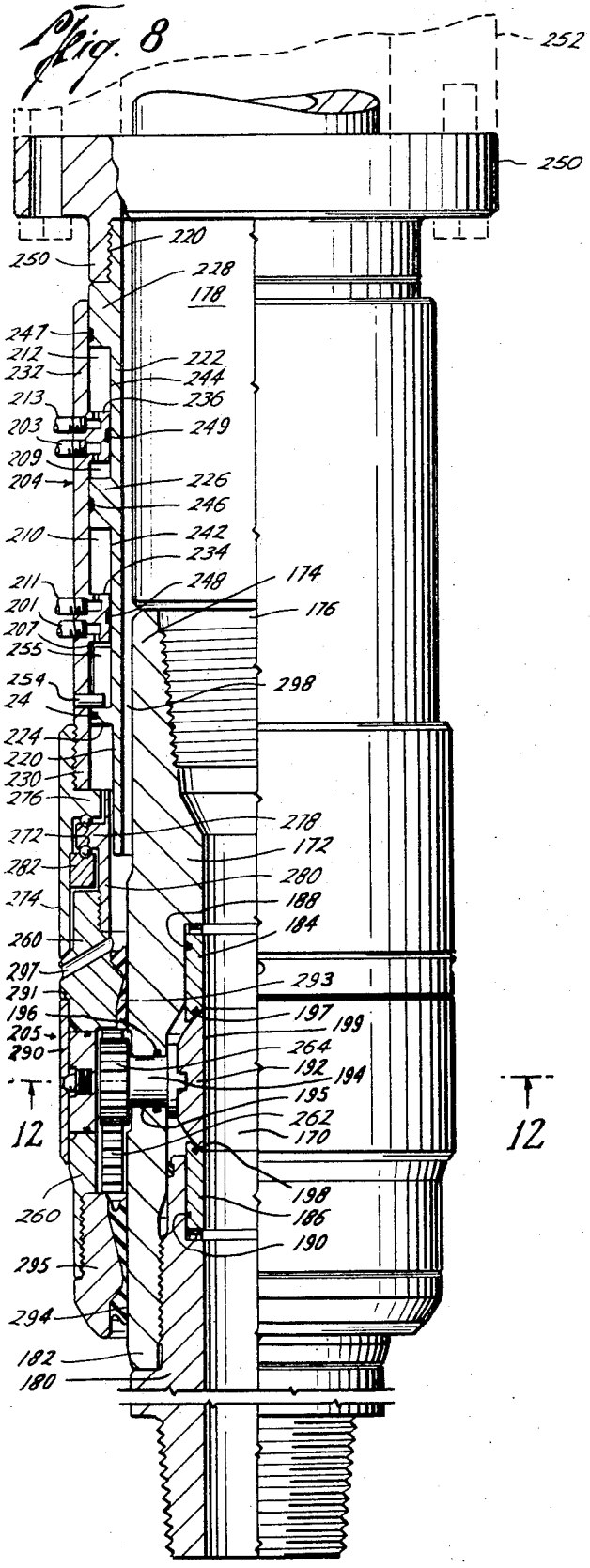
252
250
220
250
228
178
247
212
232
213
203
209
204
210
211
201
207
255
254
24
224
220
230
276
272
282
274
260
297
291
196
205
290
12
260
295
294
182
180
222
244
236
249
226
246
242
234
248
174
176
298
278
172
280
188
184
293
197
199
264
192
194
195
262
170
198
186
190
12

Fig. 9

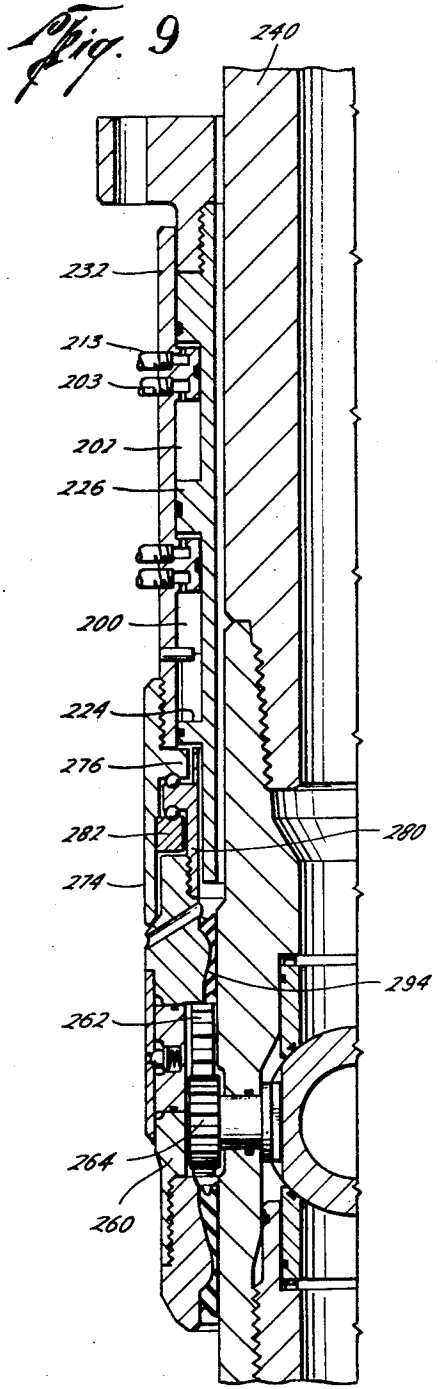
240
232
213
203
207
226
200
224
276
282
274
262
264
260
280
294

Fig. 10

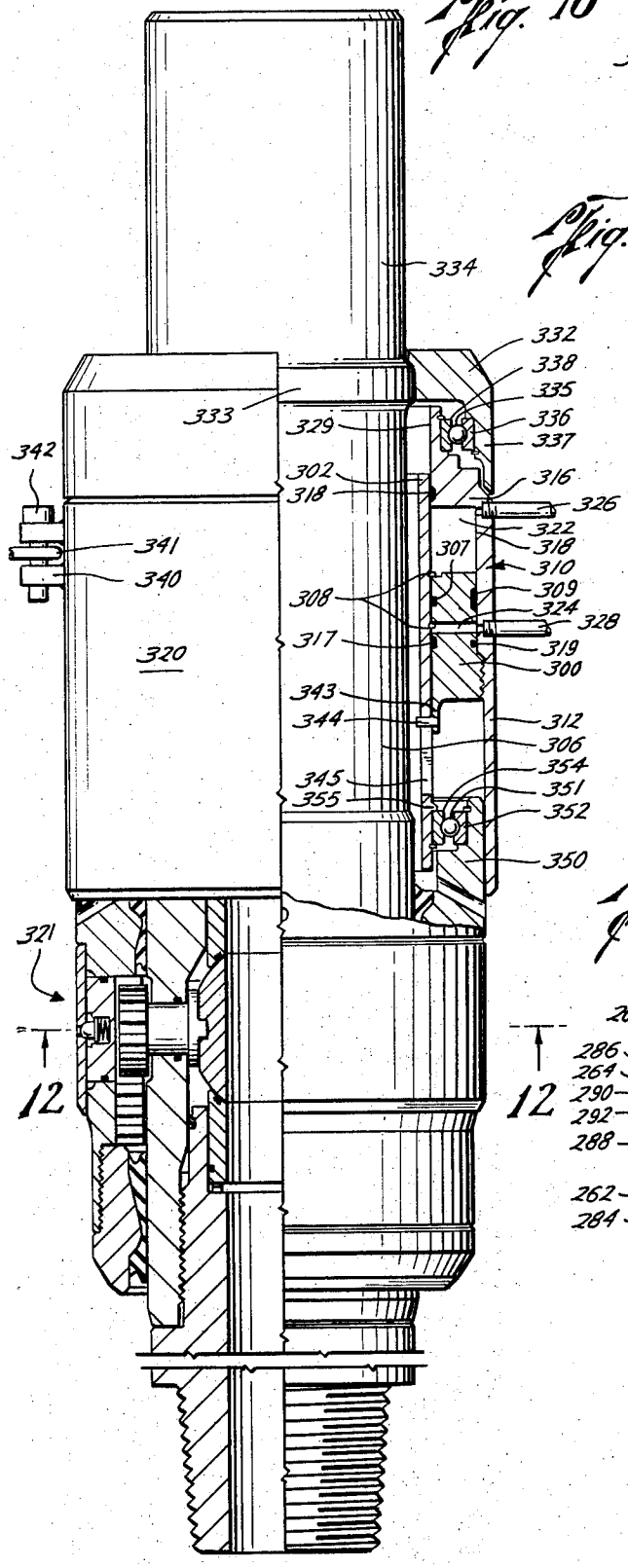


Fig. 11

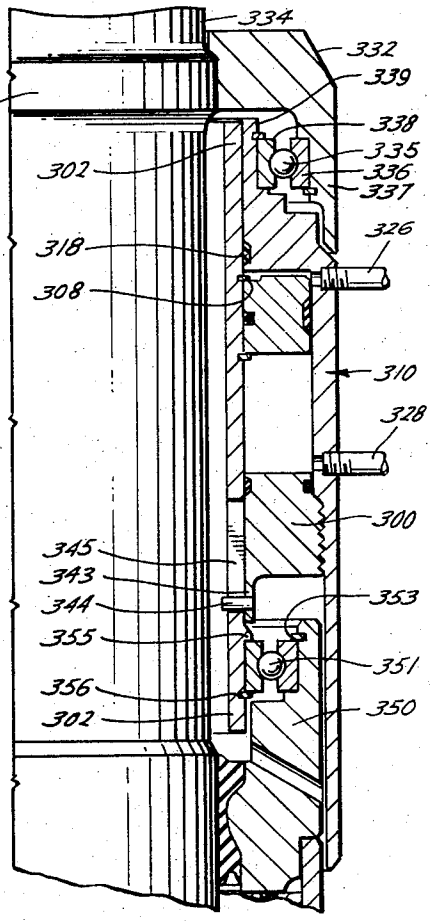


Fig. 12

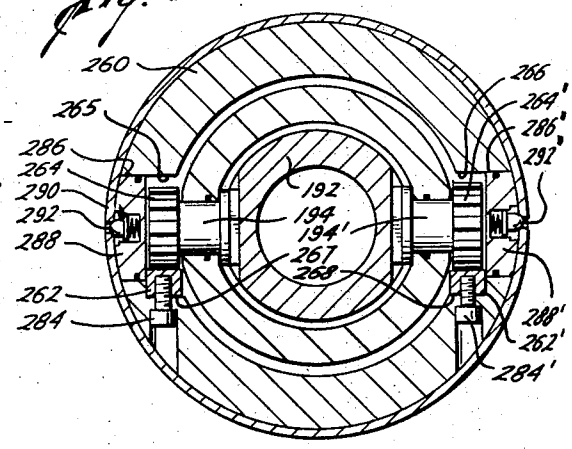

# POWER KELLY COCK

## BACKGROUND OF THE INVENTION

1. Field of the Invention

This invention pertains to power actuated valves and more particularly to upper kelly cocks used to prevent back flow through the drill string in the rotary system of drilling wells.

During the course of drilling a well, if there is an indication that the formation pressure exceeds the hydrostatic pressure of the drilling fluid (mud) in the well such that there is apt to be a blow out, the annular space between the drill pipe and casing or well bore is closed with valve means known as a blowout preventer and the fluid passage through the drill string is closed by other valve means, either a check valve in the lower end of the drill string adjacent the bit, sometimes called a "float valve" because of other functions, or else by means of a kelly cock at the upper end of the drill string.

The present construction concerns such upper kelly cocks and is to be distinguished from mud saver valves or kelly foot valves used to retain mud in the kelly when the string is disconnected for the insertion of an additional length of drill pipe. Upper kelly cocks are also to be distinguished from automatic shut off valves for tubing, used to discontinue flow of oil from the well through the tubing in case the flow line is broken downstream from the well.

2. Description of the Prior Art

It is known to place valves at various positions along the length of a drill string. For example, a check valve, typically of the flapper type and known as a float valve, may be placed at the lower end of the string just above the bit, to prevent back flow of fluid from the well bore into the drill string. A variety of valves known as kelly foot valves and mud saver valves have also been proposed for installation below the kelly near the upper end of the drill pipe to prevent back flow in case of formation pressure exceeding the pressure of the fluid in the well bore or to retain the drilling fluid in the kelly when separated from the rest of the drill string (e.g., to add a length of drill pipe). Finally, a valve may be placed at the extreme upper end of the drill string between the kelly and the swivel spindle. The latter is usually a manually actuated plug valve known as an upper kelly cock. It is to be noted that an upper kelly cock is always above the rotary table where it is accessible for manual actuation, as distinct from float valves, kelly foot valves, and mud saver valves, which are either always or oftentimes down the hole, at least below the rotary table.

## SUMMARY OF THE INVENTION

The present invention provides a powered actuator for the remote operation of a kelly cock transmitting the drilling fluid for a drilling rig. The powered actuator is annularly disposed around the exterior of and attached to the kelly cock and/or the power swivel or power swivel sub. Fluid power lines are extended from the powered actuator to a valve located on the drilling rig floor such that the kelly cock can be remotely operated. In order to permit the fluid power lines to remain connected to a source of power that is stationary on the rig floor while the kelly cock rotates with the drill string, a rotatable connection means is provided between a rotating portion of the powered actuator that is connected to the kelly cock and a non-rotating portion of the powered actuator that is connected to the fluid power lines. In addition, means is provided to anchor the non-rotating portion of the powered actuator to some non-rotating structure of the drilling rig to prevent the non-rotating portion of the powered actuator from rotating with the kelly cock.



According to one embodiment of the invention the powered actuator can be used with a standard kelly cock whereby the powered actuator has more versatility. This flexibility also permits the powered actuator to be moved from one drilling rig to another.

The kelly cock includes a cylindrical valve body with a ball core rotating perpendicularly to the axis of the valve body. The core is keyed to a valve stem. The powered actuator provides means to rotate the valve stem about the stem axis.

According to the invention the powered actuator includes a fluid motor and a transmission means. Specifically, the fluid motor comprises an expansible chamber means, one portion of which reciprocates along the flow axis of the kelly and drill string, and the other portion remains stationary in that it does not reciprocate with respect to the rotating kelly and does not rotate with respect to the reciprocating portion of the motor. The expansible chamber means includes a piston and cylinder. Either the piston or the cylinder may be used as either the stationary or the reciprocating portion of the motor.

In the different embodiments of the invention, thrust means is provided connecting the stationary portion of the motor to the swivel housing or swivel sub or the kelly cock body. In the case of such connection of the stationary member to a rotating member, i.e., swivel sub or kelly cock body, the connection includes a thrust bearing.

The transmission means includes a translating means for converting the reciprocation of the motor to rotation of the core of the kelly cock. The translating means comprises a rack and pinion. The reciprocating member of the motor is connected to the the rack of the translating means by a set of thrust bearings so that the translating means can rotate with the kelly cock and the motor can be not rotating. By virtue of this rotary connection, the fluid power lines can be left connected to the motor at all times during drilling. To avoid imposing any pull on the fluid power lines, other means are provided to positively prevent rotation of the connection part of the motor, either piston or cylinder, to which the hose lines are connected. Means is also provided to prevent relative rotation of the piston and cylinder to prevent wear on the motor seals.

Several means are disclosed to prevent rotation of the connection part of the motor. In one embodiment wherein the hose lines are connected to the outer or housing part of the motor and such housing is the reciprocating part of the motor, the housing is splined to a special swivel flange that is bolted to the swivel housing. The inner part of the motor is rotatably mounted by thrust bearings upon a support clamped to the kelly cock, and guide pins carried by the outer part slide in apertures in the piston carried by the inner part to prevent relative rotation of the piston and cylinder.

In another embodiment, the interior stationary part of the motor is bolted to the swivel flange and the exterior reciprocating part is connected to the interior part by a pin and slot to prevent relative rotation. In a third

embodiment of the invention the connection part of the motor is connected to the valve body by a thrust bearing and to prevent rotation is chained to the rig mast. The interior part of the motor is connected to the stationary exterior part by a pin and slot. If there is enough seal friction to prevent relative rotation of the exterior and interior parts of the motor, the guide pins or pin and slot connection therebetween can be omitted.

The embodiments of the invention are structured to minimize any mechanical failure by having the motor and transmission means take the form of a cylindrical structure having an axis coinciding with the flow axis of the valve body of the kelly cock. This permits a uniform thrust around the kelly cock to either open or close the valve. This structure also facilitates making the actuator releasably attachable to the valve body.

The powered actuator can be located at various points. In one embodiment the transmission means is disposed around the body of the kelly cock and the motor is disposed around the cylindrical structure of thr transmission means. This provides a short overall construction. The alternative embodiments circumscribe the transmission means around the valve body of the kelly cock but dispose the motor above the transmission means around the swivel sub or the upper part of an elongated valve body. In the alternative embodiments the overall construction will have a smaller outer diameter.

In one alternative embodiment a plurality of expansion chambers acting in tandem are used permitting an even smaller diameter since the larger number of expansible chambers can duplicate the thrust of a larger single chamber as shown in the preferred embodiment. However, the overall length of this structure is greater than that of the other embodiments.

Other objects and advantages of the invention will appear from the following description.

## BRIEF DESCRIPTION OF THE DRAWINGS

For a detailed description of a preferred embodiment of the invention, reference will now be made to the accompanying drawings wherein:

FIG. **1** is an elevation of a drilling rig including a power kelly cock in accordance with the invention;

FIG. **2** is an elevation, partially in section, of the power kelly cock shown in FIG. **1**, the kelly cock being in the open position;

FIG. **3** is an elevation similar to FIG. **2** showing the kelly cock in the closed position;

FIG. **4** is a sectional view of the power kelly cock taken at a plane **4—4** indicated in FIG. **2**;

FIG. **5** is a sectional view of the power kelly cock taken at a plane **5—5** indicated in FIG. **2**;

FIG. **6** is a sectional view of the power kelly cock taken at a plane **6—6** indicated in FIG. **3**;

FIG. **7** is a sectional view of the power kelly cock taken at a plane **7—7** indicated in FIG. **2**;

FIG. **8** is an elevation, partially in section, showing another embodiment of the power kelly cock in the open position.

FIG. **9** is a fragmentary sectional view of the power kelly cock of FIG. **8** showing the kelly cock in the closed position;

FIG. **10** is an elevation, partially in section, showing another embodiment of the power kelly cock in the open position;

FIG. **11** is a fragmentary sectional view of the power kelly cock of FIG. **10** showing the kelly cock in the closed position;

FIG. **12** is a sectional view of the embodiments of the power kelly cock shown in FIGS. **8** and **10** at plane **12—12** indicated in FIGS. **8** and **10**.

## DESCRIPTION OF THE PREFERRED EMBODIMENTS

### DRILL RIG & DRILL STRING

Referring now to FIG. **1** there is shown the lower portion of a mast **10** of a drill rig derrick (not shown) resting on the floor **12** of the drill rig. Below the floor there is shown the upper end of a string of drill pipe **14** which is connected to the lower end of a kelly **16**, the latter passing through a rotary table **18** on the rig floor **12**. Rotary table **18** provides means by which the kelly **16** and drill pipe **14** are rotated.

The upper end of the kelly **16** is screwed into a plug valve **20** known as a kelly cock. The kelly cock **20** rotates with the kelly **16** and drill pipe **14**. The upper end of the kelly cock **20** is connected to a swivel sub **22** which also rotates.

The swivel **30**, into which the swivel sub **22** connects, provides a rotatable connection to the mud line **24**, which does not rotate. The swivel **30** is supported by a hook **26** on the lower end of a traveling block **28**, by means of which the drill pipe **14** is raised and lowered. The traveling block **28** is supported by cables **32** which extend to a fixed or crown block (not shown) at the upper end (not shown) of the derrick.

### POWERED ACTUATOR

A powered actuator **40** for opening and closing the kelly cock includes a motor **41** and transmission means (described hereinafter) connecting the motor to the kelly cock. The motor **41** includes a cylinder within which is disposed a double acting piston, forming between the cylinder and piston on opposite sides of the piston two expansible chambers **43, 45** (see FIGS. **2** and **3**). The piston is connected through thrust bearings to the body of the kelly cock **20** and the cylinder is connected through the transmission means to the core of the kelly cock.

The expansible chambers **43, 45** are supplied with an actuating fluid such as air by two lines **42** and **44** (refer once more to FIG. **1**) which in turn connect through a four way valve **46** to a source (not shown) of fluid under pressure, valve **46** either opening line **42** or opening line **44**. Fluid pressure through line **44** causes chamber **43** to expand thereby opening the kelly cock **20**, and fluid pressure through line **42** causes chamber **45** to expand thereby closing the kelly cock **20**.

To move the kelly cock **20** between the open and closed positions, a portion of motor **41**, in this case an outer portion, the cylinder, moves up and down relative to the kelly cock **20**.

The outer portion of motor **41** must not rotate, due to the attachment of fluid lines **42, 44**. To prevent rotation of the outer portion of the motor and at the same time allow up and down motion thereof it is connected by spline means to the stationary part of the swivel. The spline means comprises a plurality of slotted ears **47** disposed on the outer periphery of the motor **41** which receive a plurality of legs **48** extending downwardly from swivel flange **49** fastened to the base of swivel **30**. The legs slide within ears **47** thereby allowing the outer

portion of the motor **41** to reciprocate up and down while preventing rotation thereof relative to the derrick. The swivel flange **49** is a special structure used especially as a part of the invention, but any standard swivel can be used in that the swivel flange can be attached to any standard swivel.

## KELLY COCK

Refering now to FIG. **2**, there is shown the kelly cock **20** upon which is mounted the powered actuator **40** for opening and closing same. The kelly cock **20** which may be of conventional design, includes a cylindrical valve body **50** having an outlet **52** at its lower end which terminates in a threaded pin **54** for connection in the kelly **16**. The upper end of the valve body **50** is provided with a threaded bore **56** which is closed by a valve sub **58**. As shown in FIG. **3**, sub **58** includes a pin **60** received in the threaded bore **56** and, at its upper end, a box **62** adapted to receive the swivel sub **22**.

Still referring to FIG. **3**, a pair of valve seats **64, 65** and a spherical plug **70** are captured within the valve body **50** by a shoulder **66** at the valve outlet **52** and by a shoulder **68** near the lower end of the valve sub **58**. There are springs **72, 74** between the shoulders **66, 68** and seats **64, 65** urging the seats against the plug **70**. Plug **70** has a passageway **71** therethrough which, when aligned with the bore **73** of valve body **50**, permits the drilling fluid to pass through. FIG. **2** shows the valve in the open position and FIG. **3** shows the valve in the closed position.

Referring further to FIG. **3**, a valve stem **76** is rotatably mounted in a hole **78** in the side of the valve body **50** and is connected to the plug **70** by means of a key **82** and slot **84** whereby the plug **70** can shift axially within the valve body **50** moving against the downstream seat **64** when the kelly cock **20** is in the closed position. The valve stem **76** also has a socket **86** at its outer end to receive a wrench or the like for turning the plug **70**.

## TRANSLATING MEANS

The aforementioned transmission means forming part of powered actuator **40** and connecting motor **41** to kelly cock **20** is shown in FIG. **3**. The transmission means includes a translating means comprising a wrench shaft **80**, a pinion **90**, a rack **92**, a cylindrical support sleeve **100**, and a tie rod **102**. The short wrench shaft **80** is inserted into the valve stem socket **86**. The pinion **90** is mounted on the wrench shaft **80**. The pinion **90** is engaged by a rack **92** which moves up and down parallel to the flow axis of the valve body **50** and drill pipe **14**. The rack **92** moves within the outline of cylindrical support sleeve **100**, which extends around the valve body **50** of the kelly cock **20**. As shown in FIG. **4**, a split clamp ring **94** frictionally engages the valve body **50**. The clamp ring **94** is connected to the support sleeve **100** by cap screws **96** extending through slotted lugs **97** on the clamp ring. The wrench shaft **80**, pinion **90**, rack **92**, cap screws **96**, support sleeve **100** and clamp ring **94**, all rotate with the kelly cock **20** as the rotary table turns the kelly **16**.

Referring now to FIG. **5**, the outer end of the wrench shaft **80** is supported by an outboard bearing **98**. The bearing **98** is screwed to plate **101** by cap screws **99**. Plate **101** is welded across an opening in the side of sleeve **100** and is also welded to the open side of an inner sleeve **103** which fits closely around the outside of valve body **50**. Bearing **98** gives added support to the wrench shaft **80** so that it will not jump out of the stem socket **86** when subjected to torque caused by the rack **92** moving to turn pinion **90**.

The rack **92** is reciprocated within the interior space defined by support sleeve **100** and bearing **98** by means of tie rod **102**. The tie rod **102** is screwed into the rack **92** and as shown in FIG. **3**, extends upwardly through holes **105, 107** in sleeve **100**.

Referring now to FIGS. **3** and **6** the upper end of the tie rod **102** has a head **104**. The tie rod head **104** is received in a socket **108** in the inner drive ring **110** (see also FIG. **3**) and is retained therein by inner ring cover **106**, which, as shown in FIG. **2**, is secured to the inner ring **110** by a plurality of cap screws **112**. The ring **110**, the ring cover **106**, the cap screws **112**, and the tie rod **102**, all rotate with the kelly cock **20**. A dust cap **114** is also secured to the ring cover **106** by cap screws **112**. A rubber ring seal **116** is secured between the cap **114** and the cover **106** to seal them and centralize them relative to the valve sub **58**. These parts also rotate with the kelly cock. The translating means described above all rotate with the kelly **16** and drill pipe **14**.

## MOTOR

The stationary member of motor **41** includes an annular piston **120** suitably secured by a press fit or welding to a sleeve **122** which circumscribes a portion of support sleeve **100**. The sleeve **122** not only does not rotate with the kelly cock **20** and support sleeve **100**, but it also does not reciprocate with the reciprocating member of motor **41**. Sleeve **122** has shoulders **124** which capture thrust bearings **126, 128** against oppositely directed shoulders **130** disposed in support sleeve **100** thereby permitting the support sleeve **100** of the transmission means to rotate with the kelly **16** and yet prevent the reciprocation of the annular piston **120** of motor **41**. The bearings **126, 128** and sleeve **100** provide thrust means connecting the stationary parts of the motor **41**, i.e., piston **120** and sleeve **122**, to the body **50** of the kelly cock.

The reciprocating member of motor **41** is the cylinder **140**. The cylinder **140** includes cylinder sleeve **141** to which are secured cylinder heads **143, 145** forming annular recess **142** therebetween.

Cylinder **140** circumscribes piston **120** and piston rod sleeve **122** and support sleeve **100**. Cylinder **140** moves up and down axially relative to annular piston **120** and valve body **50**. The cylinder **140** and the piston **120** are kept in alignment by means of a plurality of screws **144** which also serve to hold together the various components of the cylinder **140**.

## ROTARY CONNECTION

Means to transmit thrust of the cylinder **140** to the rotating translating means portion of the transmission means includes a thrust bearing **146** and tube **147** extending upwardly from cylinder head **145**. The bearing is secured between an annular groove **148** formed by shoulder **149** in tube **147** and shoulder **149** created by ring cover **107** and a corresponding annular groove **150** formed by shoulder **152** disposed in inner ring **110** and shoulder **154** created by ring cover **106**. Bearing **146** permits the tie rod **102** to rotate with the kelly **16** and yet transmits the thrust of cylinder **140** to force tie rod **102** to reciprocate up and down with cylinder **140**, thereby rotating plug **70** to the open position or closed

position. The previously described dished cap **114** extends over the inner ring **110** and end of cylinder casting **140.**

Cylinder heads **143, 145** are provided with ports **156, 158.** Fluid lines **42, 44** are attached to these ports. Fluid pressure against the annular piston **120** causes the cylinder **140** to reciprocate up or down. Dependent on the position of four way valve **46,** pressure fluid is supplied through one line to one side of piston **120** and through the other line pressure fluid is bled off. Fluid pressure in line **42** causes upward motion of the piston. This drives tie rod **120** and rack **92** upward turning pinion **90** to move ball **70** to the closed position shown in FIG. **3.** The creation of fluid pressure in line **44** causes chamber **43** to expand and the reciprocating member of motor **41** to move downward aligning the passageway **71** and bore **73** thereby opening kelly cock **20** to the passage of drilling fluid, as shown in FIG. **2.**

## MODIFICATIONS

Two alternative embodiments of the invention are shown in FIGS. **8** and **10.** These embodiments differ from the FIG. **2** embodiment in that the motor does not circumscribe the transmission means but is disposed above it closer to the swivel. This requires either a longer kelly cock or the use of some special sub between the upper end of the kelly cock and the swivel because of the added length of the powered actuating means. In the FIG. **8** embodiment a special long swivel sub has been used whereas in the embodiment of FIG. **10** a longer kelly cock has been provided.

## FIG. 8 EMBODIMENT

The embodiment shown in FIGS. **8, 9,** and **12** includes a valve or kelly cock **170** which is basically the same as that of the FIG. **2** embodiment. Valve **170** includes a tubular body **172** having at its upper end a threaded box **174** connecting to the pin **176** at the lower end of swivel sub **178.** A double pin nipple **180** is screwed into a threaded box **182** at the lower end of the body. Valve seats **184, 186,** are received in sockets in the valve body and nipple **180** respectively and sealed thereto by **0** rings **188, 190.** A ball **192** provides a valve core as in the FIG. **2** embodiment. Valve stem **194** is rotatably mounted in a bearing hole **195** in the valve body and is keyed to the core. **0** ring **196** seals the stem to the bearing. Packing rings **197, 198** in the seats seal them to the ball **192,** either around the flow passage **199** therethrough when the ball is in the open position as shown in FIG. **8,** or at the sides of the ball when it is in the closed position as shown in FIG. **9.** It is noted that in the FIG. **8** embodiment, the valve core is inserted through the pin end of the valve whereas in the FIG. **2** embodiment the valve core is inserted through the box end of the valve. The difference is not significant however, for either valve could be used in either construction. Except as just noted the valves of the two constructions are alike and operate in the same way.

For operating the valve of the FIG. **8** embodiment there is provided a powered actuator comprising a motor **204** which does not rotate and a transmission means **205** which rotates with the valve (kelly cock).

## TANDEM CHAMBER MOTOR

The motor **204** comprises two sets of expansible chambers **207, 209** and **210, 212.** The chambers act in tandem causing the motor **204** to either open or close the kelly cock **170.** The expansion of chambers **210, 212** by virtue of fluid pressure via fluid lines **211, 213** causes the kelly cock **206** to open, as shown in FIG. **8,** and the expansion of chambers **207, 209** by virtue of pressure through lines **201, 203** causes the kelly cock **170** to close as shown in FIG. **9.**

The use of dual expansible chambers permit the outside diameter of the powered actuator to be smaller than that of the FIG. **2** embodiment or the alternative embodiment described in FIG. **10** since two smaller chambers acting in tandem will have the thrust of a single larger expansible chamber used in the other two embodiments. However, the use of tandem chambers causes the embodiment of FIG. **8** to be longer.

The two sets of chambers **207, 209** and **210, 212** are formed by a reciprocating member and a non-reciprocating member. Piston **230** is the reciprocating member of the motor **204** and the cylinder **220** is the non-reciprocating member. The cylinder **220** is formed by a support sleeve **222** circumscribing the swivel sub **240** and by three external annular flanges or cylinder heads **224, 226, 228** disposed on the outer periphery of the support sleeve **222.** Flanges **224, 226, 228** form annular recesses **242, 244.** The piston **230** is formed by a cylindrical sleeve **232** circumscribing the support sleeve **222** and by internal annular flanges **234, 236** extending into recesses **242, 244** respectively, forming expansible chambers **207, 209** and **210, 212.** Annular rings **245, 246, 247** seal the outer periphery of flanges **224, 226, 228** to the inner periphery of cylindrical sleeve **232** and annular rings **248, 249** seal the outer periphery of flanges **234, 236** to the outer periphery of support sleeve **222** to make expansible chambers **207, 209** and **210, 212** fluid tight.

In contrast to the FIG. **2** embodiment, in the FIG. **8** embodiment the non-reciprocating part (cylinder **220**) of motor **204** is secured to a flange **250** bolted to the swivel **252** rather than being rotatably mounted on the exterior of the transmission means attached to the kelly cock. The cylinder **220** is threaded into skirt **251** depending from flange **250.** The skirt **251** provides thrust means to prevent the cylinder **220** reciprocating with the piston **230,** and it also provides means preventing rotation of the cylinder with the kelly cock.

The piston **230** can be prevented from rotating with the kelly cock **206** by a variety of means. One means shown in FIG. **8** comprises pin **254** in sleeve **232** extending into slot **255** in sleeve **222,** forming a spline. This allows the piston to reciprocate while preventing it from rotating with the kelly cock **232** relative to the cylinder.

## ROTARY CONNECTION

As in the FIG. **2** embodiment, thrust bearings are used to transmit the reciprocation of the piston of the non-rotating motor **204** to the rotating translating means **205.** Piston **230** is threaded to a cylindrical coupling **274** which has an internal flange **276** engaging a ring of thrust bearings **272.** The bearings **272** are respectively above and below an annular flange **278** on a nipple **280** which is threaded into the actuator sleeve **260** of the transmission means. The lower bearings **272** are captured between flange **278** and a bearing ring **282** pressed into a counterbore in sleeve **274.** Bearings **272** thereby transmit the reciprocating movement of piston **230** to the actuator sleeve **260.**

## TRANSLATING MEANS

The translating means of the FIG. 8 embodiment is different from that of the FIG. 2 embodiment in that an actuator sleeve **260** with one or more racks such as rack **262** affixed to its inner periphery is used to rotate the pinion **264** rather than a tie rod attached to a rack which reciprocates within its support sleeve as in the FIG. 2 embodiment.

Preferably, as shown in FIG. **12**, the ball **192** is provided with a second shaft **164'**, keyed to the ball in the same manner as shaft **164.** A second pinion **264'** is affixed to shaft **164'**, the same as pinion **264** is affixed to shaft **164.** The actuator sleeve **260** is internally slotted at **265, 266,** the slots extending from the lower end of the sleeve part way up to the upper end of the sleeve, forming channels allowing for relative movement of the sleeve and the pinions **264, 264'**. There are grooves **267, 268** in the sides of the slots in which are inserted the racks **262, 262'**. The racks are connected to the actuator sleeve by cap screws **284, 284'**. By using a plurality of racks driving a plurality of pinions there is less tendency for the ball **192** to bind in the body of the kelly cock.

There are apertures **286, 286'** in the sides of the actuator sleeve **260** through which the pinions **264, 264'** can be inserted. These apertures are closed with cover discs **288, 288'** which in turn are held in the actuator sleeve **260** against the sides of racks **262, 262'**, by an outer cover sleeve **290.** The cover sleeve **290** is retained axially on actuator sleeve **260** against annular shoulder **291** by spring biased detents **292, 292'** which can be released with one's finger.

Referring to FIG. **8,** rubber seal **293** is bonded to the inner periphery of the upper part of actuator sleeve **260,** and rubber seal **294** is bonded to the inner periphery of ring **295** screwed into the lower part of the actuator sleeve **260.** Seals **293, 294** are adapted to slide up and down on the valve body **270** and thus provide axial guide bearings for the actuator sleeve. A drain port **297** in sleeve **260** prevents fluid from accumulating above seal **293** in the annulus **298** between the motor **204** and nipple **280** on the one hand and swivel sub **240** and valve body **172** on the other.

## FIGURE 10 EMBODIMENT

Referring now to FIGS. **10–12** there is shown another modification of the invention including a kelley cock **330** and a powered actuator including a motor **320** and translating means **321.** The kelly cock **330** and translating means **321** are almost identical to that of the FIG. **8** embodiment and need not be further described except to point out the minor differences from the construction of FIG. **8.** As to the valve, one point of difference is that the valve body **334** of the FIG. **10** embodiment is much longer than the corresponding valve body **172** of FIG. **8,** eliminating the need for the extra long swivel sub **178** of the FIG. **8** embodiment.

## MOTOR WITH STATIONARY CONNECTION MEMBER

In the embodiments of FIGS. **2** and **8** the reciprocating member of the motor is the outer cylindrical sleeve. In the FIG. **10** embodiment an inner member reciprocates and the outermost member is stationary. This has the advantage that the lines do not reciprocate up and down when the motor is operated.

The motor **320** includes expansible chambers **322, 324.** The chambers **322, 324** are formed between annular cylinder **310** and annular piston **300.** The piston **300** is secured to tubular piston rod or support sleeve **312** by snap rings **308** and sealed thereto by O ring **307.** The cylinder **310** is formed by cylindrical sleeve **312,** which circumscribes support sleeve **302** and by annular cylinder heads **314, 316,** head **314** being a ring screwed into sleeve **312,** and head **316** being an annular flange integral with sleeve **312.** Annular rings **317, 318** provide sliding seals between heads **314, 316** and the outer periphery of support sleeve **302,** and annular ring **319** provides a sliding seal between the outer periphery of head **314** and the inner periphery of cylindrical sleeve **312.** Heads **314** and **316** form a recess **318.** The piston **300** extends into recess **318** thereby forming chambers **322, 324.** Ring **309** provides a sliding seal between the outer periphery of piston **300** and the inner periphery of cylindrical sleeve **312.** Pressure fluid is supplied to expansible chamber **322,** through fluid line **326** to open kelly cock **330,** as shown in FIG. **10,** and fluid pressure is supplied to expansible member **324** through fluid line **328** to close the kelly cock, as shown in FIG. **11.**

Cylinder **310** is prevented from reciprocating by thrust ring **332** press fitted onto the flange **333** on valve body **334.** A ball bearing **335** has its outer race **336** pressed into skirt **337** that depends from ring **332** and its inner race **338** pressed over neck **339** extending upwardly from cylinder head **316.** Bearing **335** is a thrust bearing and transmits the axial reaction of cylinder head **316** to reaction ring **332.** To prevent cylinder **310** from rotating it is provided with pad eyes **340** welded to the cylinder **310.** A chain **341** connected to the mast of the drill rig is releasably connected to the pad eyes by a pin **342.** To prevent piston **300** from rotating, it is provided with a depending integral skirt **343** through which extends a pin **344.** The pin **344** extends into slot **345** forming a spline which allows the piston to reciprocate while preventing it from rotating relative to the cylinder.

## ROTARY CONNECTION

The transmission means in this embodiment is the same as that of the embodiment in FIG. **8** except that the actuator sleeve **350** of the translating means is connected to the inner sleeve **302** of the motor rather than the outer sleeve **312.** As in the embodiments of FIGS. **2** and **8** this connection comprises thrust bearing means, in this instance bearing **351.** Outer race **352** of the bearing is secured in a counterbore in the end of actuator **350** by snap ring **353.** Inner race **354** of the bearing is secured against an annular extenral flange **355** on the lower end of sleeve **302** by a snap ring **356.**

## PARALLEL AXIS MOTOR

In the preferred embodiment and the embodiment of FIG. **8,** the power actuator is circumferentially disposed about the flow axis of the upper drill string including the kelly, kelly cock, and swivel sub. However, the mtor could be positioned to one side of the upper drill string. As in the embodiments shown in FIGS, **2, 8,** and **10,** the reciprocating part of the motor would be connected to the rack of the translating means by a rotary connection including a thrust bearing disposed around the axis of the drill string.

## RECAPITULATION

In all of the embodiments of the invention there is provided a powered actuating means for operating the kelly cock. In each case the powered actuating means includes a motor and a transmission means. The motor does not rotate and means are provided to prevent it from rotating. The motor includes a piston and a cylinder at least one of which is held against rotation by means connecting it to a stationary part of the system such as the mast or a non-rotating part of the swivel. The second part of the motor, piston or cylinder, is also held against rotation, but although this could be done with the same as with the one part of the motor by connecting it to a stationary part of the system such as the mast or a stationary part of the swivel, it is simpler and preferable to connect the second part of the motor to the first. The transmission means in each case includes translating means, e.g., rack and pinion, for translating reciprocation of the motor into rotation of the core of the kelly cock. The translating means rotates with the kelly cock. The transmission further includes a rotary connection for transferring the thrust from the non-rotating motor to the rotating translation means.

It is to be observed that although it is preferred that no part of the motor rotate, it would be possible to have the part of the motor that is connected to the translation means rotate, thereby eliminating the need for the rotary connection. This of course would require that the seals between the motor piston and cylinder be capable of withstanding relative rotation of the piston and cylinder. It would also be possible to omit any anchoring means for the non-rotating part of the motor, allowing the power line to take the tension.

It is further to be noted that the powered actuator is supported in a variety of ways. In the first embodiment the actuator is supported primarily by the support sleeve on the valve body and is guided at its upper end by the spline means of the special swivel flange. In the second embodiment the actuator is supported primarily from its upper end by the swivel flange and is guided at its lower end by the valve body. In the third embodiment the actuator is supported at its upper end by the valve body and is guided by the valve body at its lower end.

Finally, it is to be noted that the various antirotation means shown in the various embodiments are inter changeable, i.e., the splined connection between the motor and swivel flange of FIG. **2**, and the pad eyes and chain of FIG. **10**, and the threaded connection of FIG. **8**, depending upon whether the motor member to which such means is connected is a reciprocating or stationary chamber. It is also to be observed that instead of using means interconnecting the piston and cylinder elements of the motor to prevent relative rotation thereof, e.g., pin and slot or guide screws and holes, both the piston and cylinder elements could be directly connected by antirotation means to some non-rotating member.

While preferred embodiments of the invention have been shown and described, modifications thereof can be made by one skilled in the art without departing from the spirit of the invention.

I claim:

**1.** An apparatus for opening and closing a kelly valve rotating with a kelly rotatably mounted on a swivel comprising,
expansible chamber means,
transmission means connected to said expansible chamber means and attachable to said kelly valve for transmitting the movement of the expansion of said expansible chamber means to the kelly valve, whereby the movement of said expansible chamber means causes said transmission means either to open or to close said kelly valve,
said transmission means including thrust bearing means allowing relative rotation of the part of the transmission means connected to the expansible chamber means and the part of the transmission means that is attachable to the kelly valve.

**2.** An apparatus according to claim **1** wherein said expansible chamber means includes,
a reciprocating member,
a non-reciprocating member,
and means to hold said non-reciprocating member fixed against rotation relative to said kelly valve,
said reciprocating member reciprocating along the flow axis of said kelly valve in response to the expansion of said expansible chamber means.

**3.** An apparatus according to claim **2** wherein said expansible chamber means includes means for supplying a fluid pressure to sad expansible chamber means, said fluid pressure causing said reciprocating member to reciprocate with respect to said non-reciprocating member.

**4.** An apparatus according to claim **3** wherein said transmission means includes a translating means for converting axial motion of said reciprocating member to motion for opening and closing said kelly valve.

**5.** An apparatus according to claim **4** adapted to actuate a kelly valve which includes a plug rotatably mounted within said kelly valve, said plug having a first position and a second position, and said kelly valve being open when said plug is in said first position and being closed when said plug is in said second position.

**6.** An apparatus according to claim **5** wherein said translating means includes a rack and pinion, said pinion being adapted to be rotatably attached to said plug and said rack being connected to said reciprocating member by means of said thrust bearings.

**7.** An apparatus according to claim **6** wherein said transmission means is annular adapted to be disposed concentric with the flow axis of said kelly valve.

**8.** An apparatus according to claim **7** wherein said expansible chamber means is annular adapted to be disposed concentric with the flow axis of said kelly valve.

**9.** An apparatus according to claim **8** wherein said non-reciprocating member is adapted to be secured to said kelly valve.

**10.** An apparatus according to claim **8** wherein said non-reciprocating member is adapted to be secured to said swivel.

**11.** An apparatus comprising:
a kelly valve adapted to be mounted on a kelly, said kelly valve having an open position and a closed position;
a motor including expansible chamber means,
supply means connecting said motor to a source of power,
transmission means connecting said motor to said valve for transmitting the movement of the expansion of said expansible chamber means to said

valve, said motor positioning said kelly valve in said open position or in said closed position by means of said transmission means, said transmission means including thrust bearing means allowing relative rotation of the part of the transmission means connected to the expansible chamber means and the part of the transmission means that is connected to the valve, and

means for holding said motor fixed against rotation with said kelly valve.

**12.** An apparatus according to claim **11** wherein

said means for holding said motor fixed against rotation with said kelly valve comprises means on said motor adopted for connection to a flange on said swivel, thereby holding said motor fixed against rotation.

**13.** An apparatus according to claim **12** wherein said transmission means includes

a support member,

a pinion rotatably mounted on said support member, said pinion being connected to said valve,

a rack engaging said pinion and being mounted within said support member,

means for fixing sid support member to said kelly valve,

said thrust bearings being captured between said rack and said motor.

**14.** An apparatus according to claim **13,** said expansible chamber means comprising a reciprocating member and a non-reciprocating member, means connecting said non-reciprocating member to said reciprocation member preventing the non-reciprocating member from rotating, said non-reciprocating member being prevented from reciprocating by connection to said support member of said transmission means, and said thrust bearings being captured between said reciprocating member and said rack whereby the thrust of said reciprocating member is transmitted to said rack.

**15.** An apparatus according to claim **14** wherein said expansible chamber means includes plural upper chambers and plural corresponding lower chambers, each of said chambers having a fluid opening at one end, said supply means alternately supplying a fluid pressure to all upper chambers or all lower chambers causing said reciprocating member to reciprocate.

**16.** An apparatus according to claim **15** wherein said reciprocating member is a cylinder and said non-reciprocating member is a piston, said cylinder having plural recesses, said piston having a projection into each of said recesses, each of said projections having its peripheral edge sealed with said cylinder thereby creating a fluid tight chamber.

**17.** Apparatus according to claim **12** adapted for use wherein said swivel flange has arms extending downwardly, and including slotted ears disposed on said expansible chamber means, said arms rotating with said ears permitting the axial reciprocation of said reciprocating member but preventing the rotation of said motor.

**18.** A power kelly cock comprising

a kelly cock,

a reciprocating motor including annular expansible chamber means disposed concentric with the flow axis of the kelly cock,

translating means for converting axial motion of the motor to rotation motion of the core of the kelly cock,

a rotaary connection between the motor and translating means, and

anti-rotation means to prevent rotation of the motor with the kelly cock,

said motor including a piston and a cylinder, said anti-rotation means including means to prevent relative rotation of the piston and cylinder.

**19.** A power kelly cock according to claim **18** wherein said motor is disposed around said translating means.

**20.** A power kelly cock according to claim **18** wherein said motor includes two expansible chamber means operating in tandem.

**21.** A power kelly cock according to claim **18** wherein said motor includes a piston element and a cylinder element and said anti-rotation means is connected to one of said elements.

**22.** A power kelly cock according to claim **21** wherein said anti-rotation means includes a spline means for cooperation with correlative spline means on a special swivel flange.

**23.** A power kelly cock according to claim **21** wherein said anti-rotation means includes thread means on the upper end of one of said elements of the motor for screwing said one element into a correlative part of a swivel flange.

**24.** A power kelly cock according to claim **21** wherein said anti-rotation means includes pad eyes connected to one of said elements of the motor adapted to be chained to a rig mast.

**25.** A power kelly cock according to claim **18** wherein said motor and rotary connection are annularly disposed about the flow axis of the kelly cock.

**26.** A power kelly cock according to claim **25** wherein the translating means includes a sleeve concentric with the flow axis of the kelly cock and axially slidably mounted thereon, a pair of racks carried by said sleeve interiorly thereof extending parallel to the sleeve axis, and a pair of pinions each connected to one end of the kelly cock core, said sleeve being connected to said rotary connection, and means sealing said sleeve to said kelly cock above and below said pinions.

**27.** A power kelly cock according to claim **26,** including means slidably sealing said sleeve to said kelly cock above and below said pinions, said seals providing guide bearings for said sleeve.

**28.** A power kelly cock according to claim **26** said expansible chamber including piston and cylinder elements, one of said elements being connected to said rotary connection and the other of said elements being connected to anti-rotation means to prevent rotation of said other of said elements with said kelly cock.

**29.** A power kelly according to claim **28** including means connecting said piston and cylinder elements preventing relative rotation of said elements while allowing relative reciprocation thereof.

**30.** A power kelly cock according to claim **25,** wherein the translating means includes a support sleeve fastened to said kelly cock against both translation and rotation, said sleeve having guide means thereon for guiding a member in reciprocation parallel to the flow axis of said kelly cock, a pinion connected to the core of said kelly cock, and a rack engaging said pinion and to said guide means, and means connecting said rack to said rotary connection.

**31.** A power kelly cock according to claim **30** wherein said motor includes piston and cylinder ele-

ments, one of said elements being connected to said rotary connection and one of said elements being connected to anti-rotation means to prevent rotation of the last said element with said kelly cock.

**32.** A power kelly cock according to claim **31** wherein the element connected to the rotary connection is the same as the element connected to the anti-rotation means, the other of said elements being connected to said support sleeve by thrust bearing means preventing axial motion of said other element and allowing relative rotation of said other element and said kelly cock, and means connecting said elements together preventing relative rotation thereof while allowing relative reciprocation thereof.

* * * * *