Aug. 6, 1963 S. L. DE WITT ETAL 3,099,914

REFRIGERATING APPARATUS

Filed Dec. 29, 1961 2 Sheets-Sheet 1

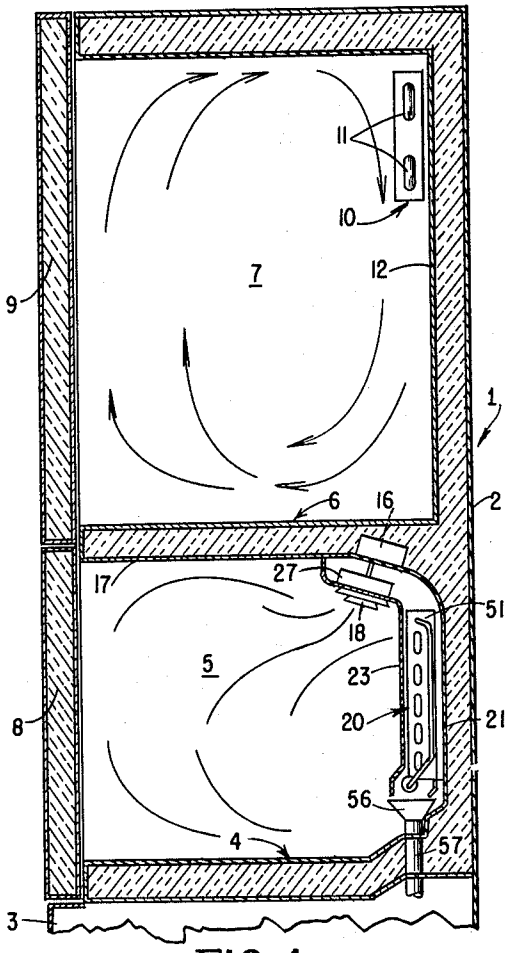


FIG. 1

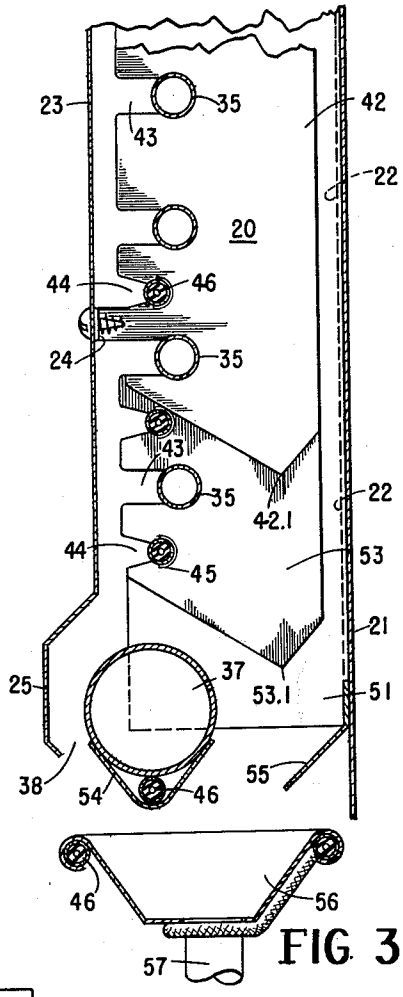


FIG. 3

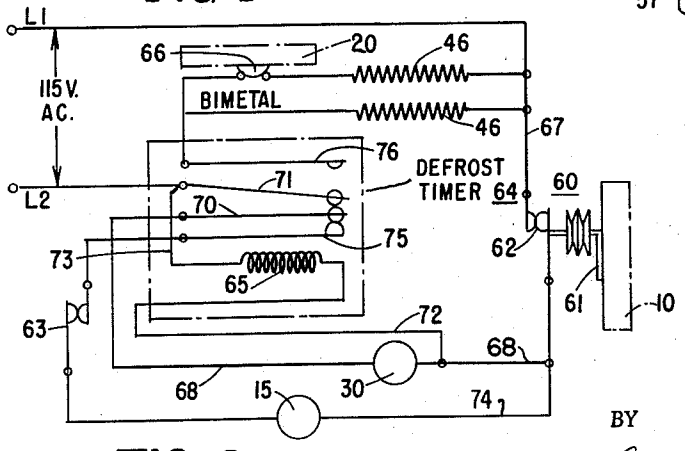


FIG. 6

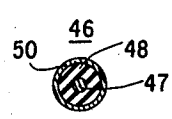


FIG. 5

INVENTORS
Stuart L. DeWitt
Theodore F. Dymek.
BY Andrew G. Hubbard
Atty.

Aug. 6, 1963 S. L. DE WITT ETAL 3,099,914

REFRIGERATING APPARATUS

Filed Dec. 29, 1961 2 Sheets-Sheet 2

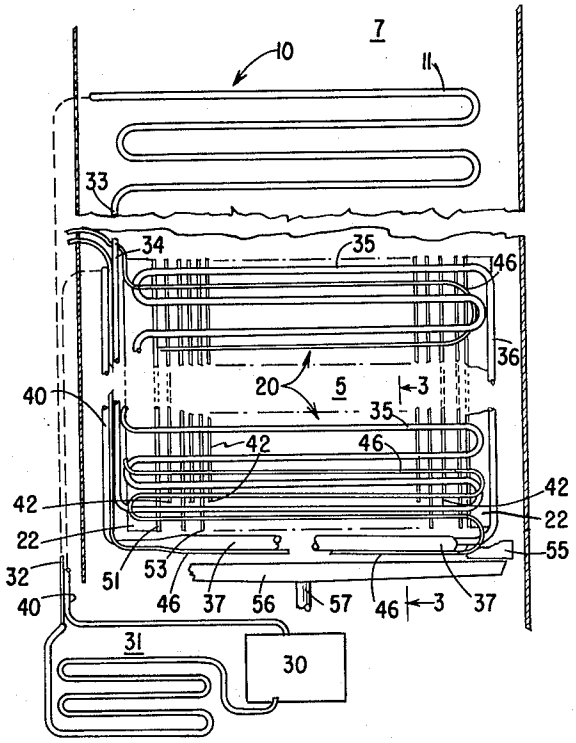


FIG. 4

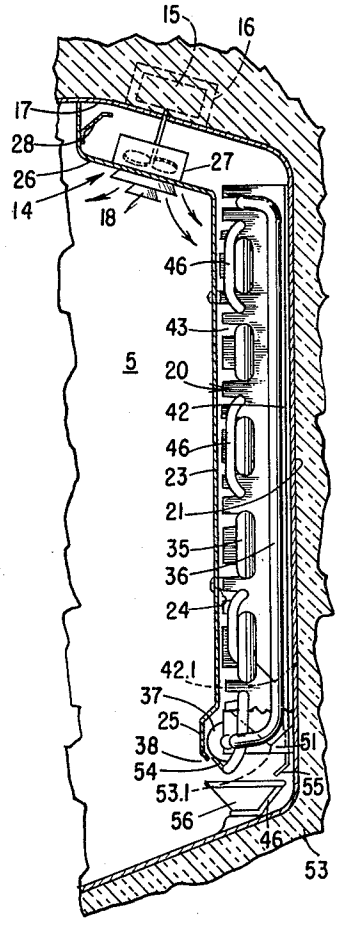


FIG. 2


INVENTORS
Stuart L. DeWitt
Theodore F. Dymek.
BY Andrew S. Hubbard
Atty.

United States Patent Office 3,099,914 Patented Aug. 6, 1963



# 3,099,914
# REFRIGERATING APPARATUS

Stuart L. De Witt, Villa Park, and Theodore F. Dymek, Elmhurst, Ill., assignors to General Electric Company, a corporation of New York

Filed Dec. 29, 1961, Ser. No. 163,192
7 Claims. (Cl. 62—276)

This invention relates to refrigerating apparatus, and especially to frozen food compartment evaporators and the defrosting thereof.

Modern domestic refrigerators are now constructed with a compartment to accommodate "fresh" foods which are best maintained at temperatures ranging from about 36° F. to 43° F. and a second compartment within which to store frozen foods at a temperature between 0° F. and 10° F. Usually there is a refrigeration evaporator in each compartment and an interconnected refrigerating system in which compressed gas is liquified in a condenser and passes from the condenser to the evaporator in the fresh foods compartment. From there refrigerant passes to the frozen food compartment evaporator and then returns to the refrigeration compressor. It is understood that there are refrigerant expansion devices such as restrictor tubes upstream of each of the evaporators and a header or accumulator in the circuit between the freezer evaporator and the compressor.

The compressor may be cycled by a fresh food compartment thermostat which is responsive to the evaporator temperature. The thermostat recloses the compressor energy circuit when the evaporator temperature reaches 37° F., and the light coating of frost which may form during a refrigeration cycle will melt. Means are provided to conduct the defrost water to a place of disposal, usually a pan exposed to the heat of the compressor. By this simple means the water resulting from each of the defrosting operations is evaporated.

The evaporator in the frozen food compartment also accumulates frost, and because the temperature of the compartment is always below freezing, the frost will not melt during the cycling of the compressor. It is necessary, therefore, to provide means for heating this evaporator to melt the frost thereon; said defrosting means usually comprises a heater wire threaded through the heat exchanger fins of the evaporator and the defrosting energizing circuit includes a time clock or the like to activate the defrost system at predetermined times. As further background information for an understanding of our invention, it should be noted that a blower is used within the freezer compartment to enforce circulation of air over the evaporator.

It is well known that when air is circulated through fin and tube type evaporators which are at a temperature substantially lower than 32° F., frost collects thereon, and in particular frost builds up on those portions of the evaporator against which the air first comes into contact. In conventional forms of evaporator, such a build-up of frost substantially restricted air flow through the evaporator. In view of the fact that the efficient operation of the refrigeration system requires a constant exchange of heat between the cabinet air and the evaporator, it is apparent that any blockage of free air flow by a frost accumulation is undesirable. A further disadvantage of conventional fin and tube freezer evaporators is that when the evaporator is heated to melt the frost, the defrost water may gather in large drops on the leading edges of the fins, not only reducing the freedom of air movement but introducing the possibility that after the defrost operation the resumption of the refrigeration cycle may freeze the residual water to form an immediate blockage against air flow.



The principal object of our invention is to provide an evaporator in which the arrangement and configuration of the leading edges of the heat exchange fins minimizes the possibility that frost build-up or concentration of defrost water can interfere with the substantially free flow of air through the evaporator.

Another object of the invention is to provide a refrigeration system including an evaporator in a freezer compartment, a blower to enforce air flow longitudinally through the evaporator, and a refrigerant header immediately upstream of the evaporator as respects the path of air flow, whereby the header will be the first to accumulate frost and thereby reduce the accumulation of frost on the heat exchange fins of the evaporator.

In a presently preferred form of our invention we arrange the freezer evaporator in vertical disposition against a vertical wall of the freezer chamber. The evaporator fins are perpendicular to the wall and the horizontal passes of evaporator tubing are adjacent that edge of the fins which is remote from the wall. A cover plate immediately in front of the fins and extending from side to side in the freezer compartment provides protection for the evaporator and also serves as a wall of a duct or passage through which air is drawn by means of a suitable fan or blower within the chamber. A first important aspect of our evaporator is that the fins are of two lengths, whereby when assembled with the upper ends thereof in a common horizontal plane, the lower edges of the respective fins are at different vertical levels. Shorter fins are placed intermediate the longer fins, preferably in an alternating relation therewith. The lowermost horizontal pass of evaporator tubing extends only through the bottom portions of the longer fins. The fins are placed approximately ⅛ of an inch apart, and it will be apparent that the bottom surfaces of the longer fins, which are the surfaces first to intercept the air stream and accumulate frost, will have approximately twice that spacing, considering the thickness of the intervening fin. This spacing can accommodate a substantial frost build-up without seriously restricting air flow through the evaporator.

A second important aspect of our invention is that we dispose a tubular refrigerant header or accumulator in a slightly inclined posture below the freezer evaporator to extend transversely thereof. The header is itself a refrigerated element of substantial area and because it is upstream of the evaporator as respects air flow, the header is the first surface on which frost accumulates. Obviously, the more which can accumulate in a non-critical area as respects air flow, the less opportunity for frost to accumulate on the evaporator fins.

We provide electrical resistance heating means in heat transfer relation with the header and the evaporator fins and means for periodically energizing the heater to melt the frost on the header and the evaporator. A third important feature of our invention is that the bottom edge of each of the evaporator fins extends downwardly and rearwardly to a vertex below and toward the rear of the evaporator; in other words, the vertices are substantially to the rear of the runs of evaporator tubing. These points are drip points at which the defrost water accumulates for dripping into a trough or the like below the evaporator. In this way, a build-up of droplets of water over the lower wall surfaces of the fins is prevented.

Other features and advantages of our invention will best be understood by the following description of a presently preferred embodiment read in connection with the accompanying drawings in which:

FIG. 1 is a side sectional elevation of a refrigerator embodying our invention, the section being taken im-

mediately inward of the side wall of the respective upper and lower storage compartments;

FIG. 2 is a side sectional elevation of the rear portion of the frozen food storage space, sectioned as in FIG. 1, but on a larger scale;

FIG. 3 is a fragmentary elevation of the lower portion of the freezer evaporator and header taken on lines 3—3 of FIG. 4;

FIG. 4 is a fragmentary front elevation of the freezer evaportor showing the spacing of fins and the relation thereto of the refrigeration tubing and heater wire. FIG. 4 schematically shows the refrigerant circuit for upper and lower evaporators;

FIG. 5 is a sectional view of the defrost heater; and

FIG. 6 is a schematic wiring diagram for the defrost control.

Referring now to FIG. 1, a refrigerator **1** of the combination frozen food-fresh food type has the usual outer cabinet structure **2** of which the fragmentarily shown lower portion **3** provides space for the compressor and other components (not shown). A five-sided inner liner **4** defines the frozen food compartment **5** and a five-sided inner liner **6** defines the fresh food compartment **7**. The respective compartments have individual doors **8** and **9** hinged and latched pursuant to any conventional mechanism (not shown). It will be understood that the usual thermal insulation is provided between the inner and outer wall structures and that the respective compartments and doors are equipped with the usual shelves, storage baskets and the like (not shown).

The fresh food compartment **7** is provided with a refrigerant evaporator **10** to extract heat therefrom. Said evaporator may be of any conventional type and for simplification, the evaporator **10** is shown in FIG. 4 merely as comprising a sinuous run of tubing **11**. Preferably, the evaporator **10** is mounted on the rear wall **12** of the liner **6**. The air movement within the chamber **7** is indicated by the arrowed lines as following conventional thermosiphonic convection patterns, although a blower or other forced air circulation means (not shown) may be employed. As will later appear, the cycling of the refrigeration system maintains the compartment **7** in a temperature range of about 36° F. to 43° F., the latter temperature developing during the off periods of the refrigeration system. Any light accumulations of frost which may form on the evaporator during the operation of the refrigeration system will melt during these off periods. The defrost water is caught in a trough-like pan (not shown) and conducted to a place of disposal, as is well known in the art.

The air in the frozen food compartment is under forced circulation by means of a fan **14** driven by a motor **15** housed within a casing **16** above the top wall **17** of the liner **4** as indicated in FIG. 4; the fan casing has conventional deflector vanes **18** to diffuse the air as it enters the compartment. The air gives up heat to the freezer evaporator **20**, which is arranged in an upright position against the rear wall **21** of the liner **4**, it being understood that the evaporator is secured to the wall by way of flanges **22** (FIGS. 3 and 4) projecting from the end fins of the evaporator as later described. The evaporator itself extends almost entirely across the rear of the compartment **5**.

To the evaporator **20** we apply a front cover plate **23** which extends completely across the rear of the compartment **5**. This plate **23** may be supported forward of the evaporator by lugs or brackets **24** integral with certain of the evaporator plates as suggested in FIG. 3. The plate **23** cooperates with the rear wall and the respective side walls of the liner **4** to establish a wide but relatively shallow air passage; the bottom edge of plate **23** is channeled (see **25**, FIG. 3) and arranged to form the entry to the air passage. The upper portion **26** of plate **23** extends forwardly and upwardly into ultimate registration with the top **17** of the liner **4**. Substantially centrally of this upper portion as respects the width of the compartment **5**, the portion **26** is arranged to accommodate the passage therethrough of the housing **27** for the blades of the fan **14**. As a means further to direct air into the zone of influence of the fan we may provide a transversely extending deflector baffle **28**. The fan housing deflectors **18** accomplish a wide distribution of the air issuing into the freezer compartment **5**, but nevertheless the shrouded intake of the fan enforces an efficient sweep of air upwardly through the evaporator structure.



Looking now at FIG. 4, the refrigeration system includes any conventional refrigerating compressor **30** from which the compressed refrigerant enters a condenser **31** of any conventional form in which the refrigerant is liquefied. The compressor **30** is in the machinery space **3** below the freezer compartment **5**; if the condenser **31** is cooled by enforced air flow it may also be in that space, and it will be understood that a fan or the like (not shown) is there to enforce the flow of the necessary volume of cooling air. Frequently, however, the condenser is arranged externally of the cabinet as by attachment to the rear wall thereof whereupon cooling of the condenser is by natural convection. The type and arrangement of the condenser **31** are not material to the present invention. From the condenser the liquid refrigerant flows into a restrictor tube **32**. Because the bore of this tube is measured in thousandths of an inch the art commonly refers to it as a "capillary" tube. From this tube the liquid refrigerant discharges into the much larger diameter tubing **11** of the fresh food evaporator. As is well known, as the liquid enters from the restrictor into the evaporator tubing the pressure on the liquid is sharply reduced. This reduction in pressure establishes a favorable condition for the evaporation of the refrigerant; the heat of the structure and contents of the fresh food compartment provides the heat energy for evaporation or "boiling" of the liquid refrigerant in the evaporator tubing. A mixture of liquid and gas leaves the fresh food evaporator at **33**, passes through a second restrictor (not shown), and enters the inlet portion **34** of the freezer evaporator **20**. The mixture traverses the several runs of tubing **35** in which further evaporation takes place and ultimately discharges from the evaporator **20** through the conduit **36** communicating with the accumulator **37** below the evaporator. In its location below the evaporator the accumulator will collect some liquid refrigerant. Because the accumulator is in the path of relatively warm air entering the evaporator through the space **38** below the cover plate **23**, the liquid refrigerant in the accumulator is undergoing evaporation. Gaseous refrigerant leaves the accumulator through tube **40**, which leaves the frozen food compartment through the side wall of the liner **4** and passes downwardly along the restrictor tube **32** and in good heat transfer relation therewith. It is understood, of course, that the respective tubes **32** and **40** are located in the insulation between the liner and outer cabinet wall.

The cycling of the compressor is under control of a thermostat having a temperature sensing device in heat transfer relation to the fresh food compartment evaporator as later explained. When the cycling of the compressor maintains the fresh food compartment from 36° to 43° F., the frozen food compartment is maintained in a temperature range of from about 0° F. to not more than 10° F. Because the evaporator **20** is therefore always at a temperature much below the freezing point of water, even during the off periods of the compressor, moisture in the air in the freezer compartment will condense out on the evaporator **20** in the form of frost and cannot melt except by the application of additional heat.

The evaporator **20** is of the fin and tube type, which comprises the most efficient form consistent with mass production techniques. The fins, such as the fin **42**, FIG. 3, are formed with slots **43** which are of the "key-

hole" type in that the entrance to the slot is a little narrower than the diameter of the circular base. The tubing **35** is initially of such shape that it will pass to the base of the slots following which it is compressed to distort it into a shape in which the wall of the tubing is in secure contact with the fins and in good heat transfer relation therewith. For supplying heat to the evaporator for the defrosting operation each of the fins is formed with a second arrangement of notches **44** having a substantially circular base defined in part by a short collar or rim **45**, FIG. 3. The notches **44** receive runs of a resistance heater **46**. As best shown in FIG. 5, the resistance heater wire **47** has conventional insulation **48** and is contained within a tubular jacket **50** of thin walled aluminum. The heater wire associated with the defrost water trough is preferably armored with braided aluminum so as to give it a greater degree of flexibility.

The fins of the evaporator **20** are quite close to each other; actually, in evaporators embodying the present invention the fins are only about ⅛ of an inch apart. Efficient operation of the evaporator **20** requires that air flow through the evaporator be as free as possible and it will be apparent that an accumulation of as little as ⅛ of an inch of frost on the facing surfaces of adjacent fins would seriously obstruct the vertical passage of air between the fins. Such a thickness of frost can readily build up at the bottom of the fins, for this is the area first encountered by the air as it passes upwardly through the evaporator. Therefore, if frost accumulation obstructs the entry to the passage between the fins, the upper portion of the evaporator loses its efficiency, for its surfaces are not being "scrubbed" by moving air.

We construct our evaporator with three forms of plates or fins. The two outermost plates **51**, FIGS. 3 and 4, are essentially rectangular and have laterally extending flanges **22** providing at least in part the means for mounting the evaporator to the rear wall of the liner **4**. Because there are only two such plates **51** their shape and arrangement are relatively unimportant. The plates or fins **42** which are immediately adjacent the fins terminate well above the bottom of fins **51** as is clear from FIG. 3. Fins **41** then alternate with fins **53**, which are substantially longer than the fins **42**. Fins **53** terminate immediately above the bottom edge of fins **51**. As a manufacturing and performance practice we have the fin **42** shorter than the fin **53** by substantially the width of the fins. In practice this distance is one and one-half inches. All of the fins have square tops, and it will be understood that with respect to fins **42** and **53** at least, the tops are in common horizontal alignment. The fins **42** and **53** have pointed bottoms, as shown best in FIG. 2; the apex of each said fin, identified as **42.1** and **53.1** respectively, are rearward of the plane occupied by the convolutions of the evaporator tubing **35**. We have found it most advantageous to locate these points **42.1** and **53.1** forward of the rear edge of the fins by about ¼ of the total width thereof.

The result of this size relationship of the respective fins is that when they are assembled to constitute the evaporator **20** there is a clearance between adjacent fins in the lower one and one-half inches thereof of the order of ⅜ of an inch, whereupon in the portion of the evaporator which is most likely to have the heaviest frost accumulate there are sufficient air channel spaces to accept a substantial accumulation of frost without air flow obstruction.

An additional important feature of our invention resides in placing the accumulator **37** below and somewhat in front of the evaporator fins, making the accumulator the first cold surface on which frost will collect. In relation to the width of the fins **42** and **53**, the evaporator is about one inch in diameter, thus having a frost accumulating surface of more than three square inches per inch of length. In view of the fact that the accumulator extends almost the full width of the evaporator, it presents a very substantial frost-gathering surface.

In a frozen food chamber of six cubic foot volume, which is presently about the maximum volume in refrigerator-freezer combinations, there may be a quite substantial amount of moisture in the air. Because the moisture will condense out in the first cold surfaces which it encounters, we are able to remove a substantial part of the moisture by condensation on surfaces where the effect of frost accumulation has very little restrictive effect as respects air flow, for all of such surfaces are located so as to provide wide air flow channels. Therefore, when the air reaches the lower portion of the fins **42**, at which location the available air flow space is only of the order of ⅛ of an inch in width, there is much less moisture in the air and thus a relatively small accumulation of frost on the fins upwardly of that portion. Nevertheless, a light frost will accumulate on the upper part of the evaporator, particularly in humid climates, and we provide means for rapidly defrosting the entire surface of the evaporator. The heating element **46** previously described is arranged for maximum heat concentration at the major areas of frost accumulation. It will be noted in FIGS. 2 and 4 that a run of the heating element **46** extends along the bottom of the accumulator **37** being affixed thereto by clamps or the like **54**; that it then passes transversely of the evaporator **20** below the lowermost run of evaporator tubing **35**; loops back to run beneath the next upper run of evaporator tubing; and back again to run below the next upper run of tubing. After this, however, the heater wire **46** runs between pairs of evaporator tubing runs.

During a defrosting operation the defrost water trickles down the fins until it encounters the sloping drip edges defining the bottom of the evaporator fins **42** and **53**. The free water will, of course, collect at the respective points **42.1** and **53.1**. As previously noted, these drip points are considerably to the rear of the runs **35** of evaporator tubing. Therefore, we substantially eliminate the possibility of an accumulation of water which might remain on the bottom edges of evaporator fins to re-freeze at the end of the defrost operation, and possibly completely bridge the space between a fin **42** and its adjacent fin **53**. Instead, the large drops of water which form at the drip points drip freely therefrom. A transverse plate **55** directs the water into a trough **56** which extends the full width of the evaporator. Said trough has an outlet tube **57** which conducts the water into a place of disposition. In accordance with well known prior art this place of disposition may be a pan or the like (not shown) in heat exchange relation with the compressor casing or a loop of tubing through which the hot compressed gas passes from the compressor into the condenser **31**. The heat transfer from such loop of tubing is sufficient to evaporate the accumulated water. The trough **56** is itself heated to prevent the water from freezing; we prefer to run a loop of heating element **46** along the upper part of the trough as by confining it within the spun over edges (see FIG. 3) and we additionally bring a loop of the heater tubing around the outlet tube **57** at its junction with the trough.

Briefly reviewing the operation of the refrigeration apparatus prior to an examination of the control circuit shown in FIG. 6:

During the refrigeration cycle the refrigerant passes from the compressor **30** through the condenser **31**, restrictor tube **32**, fresh food cooling evaporator **10**, secondary restrictor (not shown), freezer evaporator **20**, accumulator **37**, and back to the compressor. The compressor is cycled by means of a thermostat (schematically shown at **60**, FIG. 6) having its sensing element **61** in heat exchange relation with the evaporator **10** to sense the temperatures thereof at its sides and center. This thermostat is of the constant cut-in type, but has several levels of cut-out temperature optionally selectable by the user as known in the art. Considering one such thermostat setting, for

example, the thermostat will open its contacts 62 at approximately 15° F., and re-close them at approximately 37° F. This 37° F. temperature is the "constant cut-in" temperature of the thermostat. In view of the fact that this temperature represents actual evaporator temperature it is obvious that any frost accumulation on the evaporator 10 will be melted during each cycling of the thermostat.

The freezer compartment fan 14 circulates air over the evaporator 20 to reduce the temperature of the compartment to a range of from 0° to not more than 10° F. The power circuit to the fan motor 15 is open when the freezer door 8 is open; this may be accomplished by a conventional door switch 63 (FIG. 6) which upon being released by the opening door assumes a normally open position. As will presently appear, the fan motor 15 is deenergized when the compressor is "off" and during the defrosting period.

The freezer defrost system is initiated by a conventional timer 64, FIG. 6, having a group of switches operated to various relationships by a cam system (not shown) driven by a standard timer motor. FIG. 6 shows the energizing coil 65 of said motor. This timer motor runs only when the compressor is energized and during the defrost operation. The gear train (not shown) of the timer completes a rotation of the cam shaft in 12 hours; assuming that the compressor will be operating about 50% of the time, the timer will initiate a defrost operation once during each 24 hours.

In further preparation for a discussion of the defrost operation, it should be noted that a bimetal thermostat 66 is in heat exchange relation with the freezer evaporator 20 and controls that portion of the heater 46 which is specific to the evaporator; the thermostat 66 is not in a controlling situation with that part of the heater which is disposed about the drain pan 56 or the drain tube 57.

The circuit relationships of FIG. 6 are typical of normal refrigeration operation. Power for the compressor 30 may be traced from L1, conductor 67, closed thermostat 60, conductor 68, timer contact 71 to L2. Timer motor 65 is energized by way of conductors 72 and 73 to L2. Freezer fan 15 is operating through conductor 74, closed door switch 63, the closed switch contact stack 75, 70 and 71, to L2. Even though the bimetal thermostat 66 is closed at this time, the respective heaters 46 are in an open circuit because of the open switch contact 76.

When the timer reaches the state of defrost operation, contact 75 will break with contact 70 and contact 71 will break with contact 70 and close against contact 76. Assuming the thermostat 60 to be closed at this time, the timer motor will remain energized through the obvious circuit, but the compressor circuit will be broken at the open contacts 70 and 72. The circuit for the fan motor 15 will be broken at the open contacts 75 and 70. The respective heating elements 46 are closed by way of closed bimetal thermostat 66 and closed contacts 76, 71 to L2. In from eight to ten minutes, if there is a normal frost accumulation on the evaporator 20, the thermostat 66 will sense an evaporator temperature of from 32° to 33° Fahrenheit and will open to interrupt the circuit for the evaporator heating coil. The timer remains on and maintains the contacts 71 and 76 for a further interval. This maintains energy in the drip pan heater to insure that the pan is above freezing temperature until the defrost water has left the pan and the pipe 57. After a total elapsed time of about eighteen minutes from the start of defrost, the timer opens the contacts 71 and 76 and closes contacts 70 and 71. This deenergizes the drip pan heating element and restarts the compressor. Not until a further time lapse of five minutes, however, is the contact 75 closed to restore operation of the fan motor 15.

For purposes of simplification of the circuit the usual other electrical components of a modern refrigerator have been eliminated therefrom. Such components include among others a resistance heater for a butter storage chamber, lights for the respective storage compartments, mullion heaters for prevention of "sweating" on door areas, etc.

While there has been described what is at present thought to be the preferred embodiment of the invention, it will be understood that various modifications may be made therein and it is intended to cover in the appended claims all such modifications as fall within the true spirit and scope of the invention.

We claim as our invention:

1. In combination:
a refrigerator having a storage chamber to be maintained at a temperature substantially below 32° F.,
a refrigerant evaporator disposed against a wall of said chamber,
said evaporator comprising a plurality of vertically disposed heat exchange fins extending perpendicularly from said wall, said fins being in relatively close side-by-side relation,
certain of said fins being shorter than the others, the shorter fins alternating with the longer fins and the upper edges of all of the fins being in a common plane, whereby the lower portions of successive longer fins are in unobstructed facing relation and are spaced one from the other by at least twice the spacing between adjacent fins,
a plurality of passes of tubing extending horizontally one above the other through said fins adjacent the edge thereof remote from said chamber wall, all of said passes being in series relation and the lowermost of said passes extending only through the bottom portion of the longer fins,
each of said fins having a lower edge sloping downwardly and rearwardly to an apex below and to the rear of any pass of tubing and forwardly of said chamber wall,
a refrigerant system for circulating refrigerant through said tubing for evaporation therein to reduce the temperature of said fins to substantially below the freezing point of the moisture content of the air in said chamber,
means for enforcing a circulation of said air upwardly through the spaces between said fins whereby the lower portion of the longer fins will be the first to accumulate frost and the spacing between adjacent lower portions thereof accommodates such accumulation with minimum obstruction of air flow between all of the fins,
and means for melting the frost from said fins,
the apex portions of the respective fins providing frost-water drip points remote from the passes of tubing.

2. In combination:
a refrigerator having a storage chamber to be maintained at a temperature substantially below 32° F.,
a refrigerant evaporator in said chamber,
said evaporator comprising a plurality of vertically disposed elongated heat exchange fins arranged in relatively close side-by-side relation,
certain of said fins being shorter than the others, the shorter fins alternating with the longer fins and the upper edges of all of the fins being in a common plane, whereby the lower portions of successive longer fins are in unobstructed facing relation,
a plurality of passes of tubing extending horizontally one above the other through said fins adjacent the edge thereof facing into said chamber, all of said passes being in series relation and certain of said passes extending only through the bottom portion of the longer fins,
each of said fins having a lower edge sloping downwardly and rearwardly to an apex below and to the rear of a pass of tubing and forwardly of said chamber wall,
a refrigerant system including said passes of tubing

for reducing the temperature of said fins to below the freezing point of the moisture content of the air in said chamber,

means for enforcing a circulation of said air from below and forwardly of said longer fins and upwardly over all of said fins and through the spaces therebetween, whereby the lower portion of the longer fins will be the first to accumulate frost and the spacing between adjacent lower portions thereof accommodates such accumulation with minimum obstruction of air flow between all of the fins,

and means for periodically melting the frost from said fins,

the apex portions of the respective fins providing frost-water drip points remote from the initial contact of air with said fins.

3. In combination:

a refrigerator having a storage chamber to be maintained at a temperature substantially below 32° F.,

a refrigerant evaporator disposed against a rear wall of said chamber,

said evaporator comprising a plurality of elongated vertically disposed heat exchange fins extending perpendicularly from said wall, said fins being in relatively close side-by-side relation,

certain of said fins being shorter than the others, the shorter fins alternating with the longer fins and the upper edges of all of the fins being in a common plane, whereby the lower portions of adjacent longer fins are in unobstructed facing relation,

a plurality of passes of tubing extending one above the other through said fins adjacent the edge thereof remote from said chamber wall, all of said passes being in series relation,

a cover plate for said evaporator, said plate combining with side and rear walls of said chamber to constitute an air flow passage about said evaporator, the lower edge of said plate being spaced from the bottom of said chamber to provide a transversely extending entrance to said air flow passage below and forwardly of said longer fins,

a refrigerant system for circulating refrigerant through said tubing for evaporation therein to reduce the temperature of said fins to below the dew point of the air in said chamber, said refrigerant system including a refrigerant accumulator disposed in the path of air flow into said air flow passage,

means for enforcing a circulation of said air upwardly through said passage whereby the accumulator and the lower portion of the longer fins will be the first to accumulate frost and the spacing between adjacent lower portions of said fins accommodates such accumulation with minimum obstruction of air flow between the fins,

and electric resistance means for periodically melting the frost from said fins,

said resistance means providing a concentration of heat in the lower portion of said fins and at the accumulator.

4. In combination:

a refrigerator having a storage chamber to be maintained at a temperature substantially below 32° F.,

a refrigerant evaporator disposed against a vertical wall of said chamber,

said evaporator comprising a plurality of elongated vertically disposed heat exchange fins extending perpendicularly from said wall, said fins being in relatively close side-by-side relation,

certain of said fins being shorter than the others, the shorter fins alternating with the longer fins and the upper edges of all of the fins being in a common plane, whereby the lower portions of successive longer fins are in unobstructed facing relation,

a plurality of passes of tubing extending one above the other through said fins adjacent the edge thereof remote from said chamber wall, all of said passes being in series relation,

a cover plate for said evaporator, said plate combining with walls of said chamber to enclose said evaporator in an air flow passage, the lower edge of said plate being spaced from the bottom of said chamber to provide a transversely extending entrance to said passage, said entrance being below and forwardly of said fins,

a refrigerant system for circulating refrigerant through said tubing for evaporation therein to reduce the temperature of said fins to substantially below 32° F., said system including a refrigerant accumulator extending transversely within said air entrance passage below and forwardly of said fins,

means including a blower for enforcing a circulation of said air upwardly through said air flow passage, whereby said accumulator and the lower portion of the longer fins will be the first to be contacted by air flowing from said chamber into said air flow passage, whereby frost will accumulate on said accumulator and fins,

and means including a resistance heater in heat exchange relation with said fins and said accumulator for melting any frost which has formed thereon.

5. An evaporator for the freezer compartment of a refrigerator, comprising, in combination:

a plurality of first elongated metal fins having a pointed bottom edge,

a plurality of second elongated metal fins having a pointed bottom edge, said second fins being longer than the first,

said first and second fins being disposed in an upright posture within said compartment with the bottom edges thereof facing the bottom of said compartment and the front edges thereof facing the front of said compartment,

the apex of the pointed bottom of each said fin being disposed substantially closer to the rear edge of said fin than to the front edge thereof,

means for supporting the respective pluralities of fins in relatively close parallel relation, said fins being arranged with their top edges uniformly spaced from the top of said compartment and the bottom edge of the shorter fins closer to the immediately adjacent fin than the bottom edge of the longer fins is to the immediately adjacent longer fin,

said supporting means including a plurality of passes of tubing extending transversely through said fins relatively close to the front edge thereof, the lowermost pass of tubing extending only through the lower portion of the longer fins, said passes of tubing being serially interconnected,

means for introducing refrigerant into the lowermost pass of tubing,

a refrigerant accumulator extending transversely of said evaporator below and forwardly of said longer fins,

means for conducting refrigerant from the uppermost pass of tubing into said accumulator,

and means for conducting refrigerant from said accumulator to a refrigerant compression mechanism.

6. An evaporator for the freezer compartment of a refrigerator, comprising, in combination:

a plurality of elongated metal fins having a pointed bottom edge,

said fins being disposed in an upright posture within said compartment with the bottom edges thereof facing the bottom of said compartment and the front edges thereof facing the front of said compartment,

the apex of the pointed bottom of each said fin being disposed substantially closer to the rear edge of said fin than to the front edge thereof,

means for supporting the fins in relatively close parallel relation to establish air flow passages therebetween,

said fins being arranged with the bottom edge of every other fin extending below the bottom edge of the immediately adjacent fin by an amount substantially equal to the width of the fins,

said supporting means including a plurality of passes of tubing extending transversely through said fins relatively close to the front edge thereof, said passes of tubing being serially interconnected,

means for introducing refrigerant into the lowermost pass of tubing,

a refrigerant accumulator extending transversely of said evaporator below and forwardly of said downwardly extending fin portions,

means for conducting refrigerant from the uppermost pass of tubing into said accumulator,

and means for conducting refrigerant from said accumulator to a refrigerant compression mechanism.

7. In combination:

wall structure defining a chamber to be maintained at a temperature substantially below 32° F.,

a refrigerant evaporator comprising a plurality of elongated heat exchange fins in spaced side-by-side relation,

certain of said fins being substantially longer than the others, short and long fins being in an alternating relationship and disposed in a manner whereby the lower portions of successive longer fins are in unobstructed facing relation,

the bottom portion of each of the longer fins being V-shaped with the tip thereof being much closer to one of the longer edges of the fin than to the opposite edge,

refrigerant conduit means extending through all of said fins in a plurality of serially interconnected passes disposed in a common plane adjacent the said opposite edge of said fins,



means for supporting said evaporator with the first-named longer edge of each of said fins in relatively close parallel relationship to a vertical wall of said chamber and the said opposite edge occupying a common vertical plane,

a plate extending transversely of said evaporator in covering relation thereto, said plate being disposed forwardly of said evaporator considered with respect to said vertical chamber wall and defining with said wall and the top wall of said chamber a duct for channelling air flow longitudinally of said fins,

said plate being configurated to provide an elongated air entrance below and forwardly of said evaporator structure,

a refrigerant accumulator of cylindrical shape extending substantially horizontally across said evaporator in the plane of said runs of conduit between said air entrance and the bottom portion of said longer fins, the diameter of said evaporator being substantially less than the transverse dimension of said fins,

means for pumping refrigerant in a closed circuit through said evaporator and said accumulator,

and fan means disposed in said duct above and forwardly of said evaporator to cause air to flow into said inlet passage and to discharge into said chamber adjacent the upper wall thereof.

**References Cited** in the file of this patent

UNITED STATES PATENTS

| | | |
|---|---|---|
| 2,099,665 | Smith | Nov. 16, 1937 |
| 2,484,588 | Richard | Oct. 11, 1949 |
| 2,767,558 | Wallenbrock | Oct. 23, 1956 |
| 2,798,366 | Erl | July 9, 1957 |
| 2,923,135 | Preotle | Feb. 2, 1960 |
| 2,967,404 | Detwiler | Jan. 10, 1961 |