US 20020198017A1

(19) United States

(12) Patent Application Publication (10) Pub. No.: US 2002/0198017 A1

Babasaki et al. (43) Pub. Date: Dec. 26, 2002

(54) TELEPHONE SET WITH SPECIAL SOUND EFFECT MODE

(75) Inventors: **Noboru Babasaki**, Tottori-shi (JP); **Shinichi Urasaka**, Tottori-shi (JP); **Hidehiko Kuno**, Tottori-shi (JP); **Junko Nagatani**, Tottori-shi (JP)

Correspondence Address:
AKIN, GUMP, STRAUSS, HAUER & FELD, L.L.P.
ONE COMMERCE SQUARE, SUITE 2200
2005 MARKET STREET
PHILADELPHIA, PA 19103 (US)

(73) Assignee: **Sanyo Electric Co., Ltd.**

(21) Appl. No.: **10/226,904**

(22) Filed: **Aug. 23, 2002**

Related U.S. Application Data

(62) Division of application No. 09/179,664, filed on Oct. 27, 1998, now Pat. No. 6,473,628.

(30) **Foreign Application Priority Data**

Oct. 31, 1997	(JP)	300555/97
Nov. 6, 1997	(JP)	304181/97
Nov. 5, 1997	(JP)	302599/97
May 12, 1998	(JP)	128845/98

Publication Classification

(51) **Int. Cl.**[7] **H04B 1/38**

(52) **U.S. Cl.** **455/550**; 455/567

(57) **ABSTRACT**

A telephone set includes an input unit having a call button for originating and answering calls, and an end button for terminating calls. The telephone set also includes a control unit, a display unit, voice signal communication circuits, and sound circuits for generating sound effects when the control unit is in a special mode. In one embodiment, the call button is ignored when the control unit is in the special mode, and the special mode is terminated when the end button is pressed. In another embodiment, the special mode is terminated when either the call button or end button is pressed. The special mode operates independent of the communication circuits.

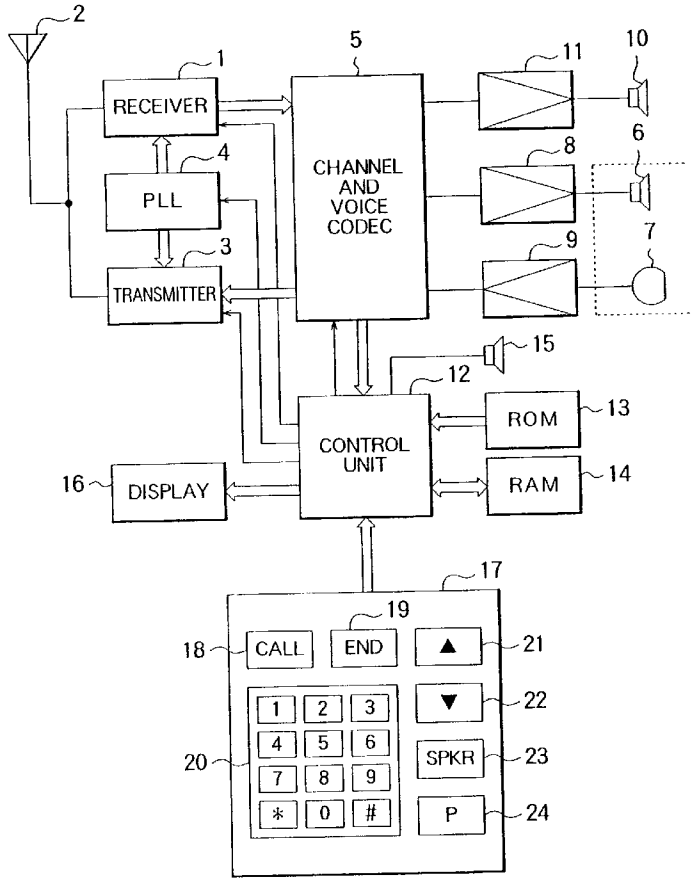

FIG. 1

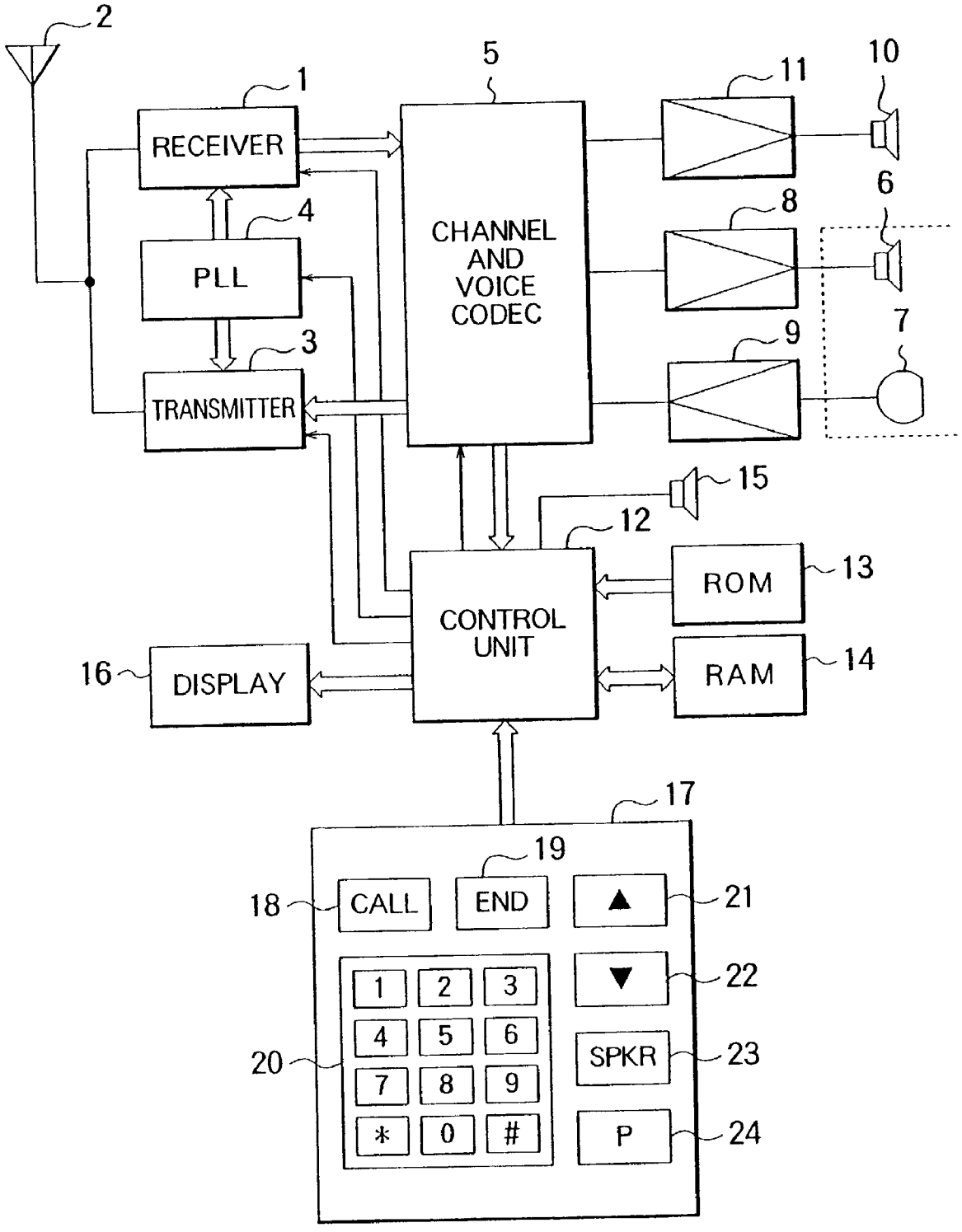
2
1
RECEIVER
4
PLL
3
TRANSMITTER
5
CHANNEL AND VOICE CODEC
11
10
8
6
9
7
15
12
ROM
13
CONTROL UNIT
16
DISPLAY
RAM
14
17
19
18
CALL
END
21
1 2 3
4 5 6
7 8 9
* 0 #
20
22
SPKR
23
P
24

FIG. 2

	1ST MODE		2ND MODE
V	1ST LOUDSPEAKER	MICROPHONE	2ND LOUDSPEAKER
1	VERY SOFT	HIGH	–
2	SOFT	MEDIUM	SOFT
3	MEDIUM	MEDIUM	MEDIUM
4	LOUD	MEDIUM	LOUD
5	VERY LOUD	MEDIUM	–

FIG. 3

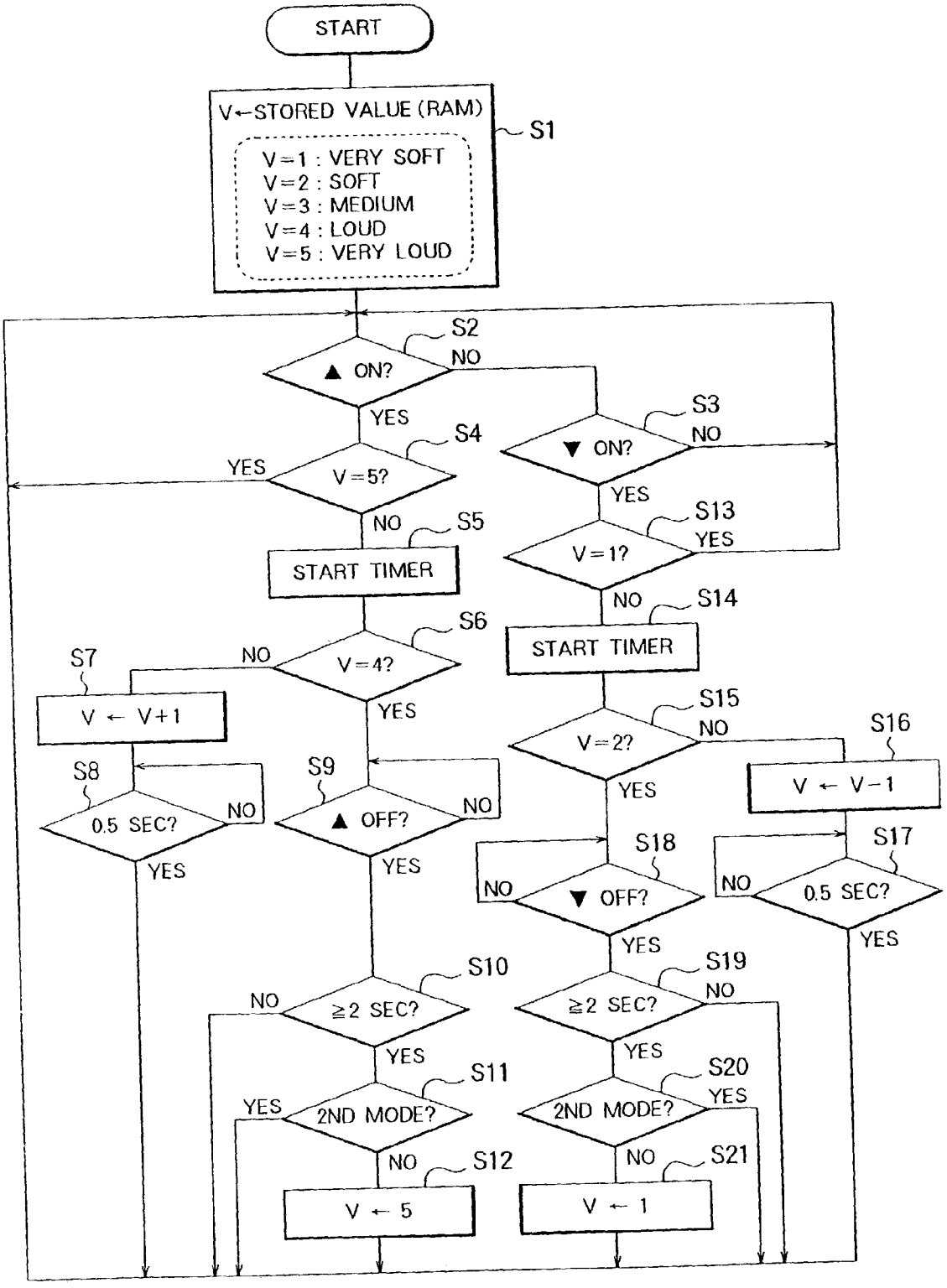
START
V←STORED VALUE (RAM)
V=1 : VERY SOFT
V=2 : SOFT
V=3 : MEDIUM
V=4 : LOUD
V=5 : VERY LOUD
S1
S2
▲ ON?
NO
YES
S3
▼ ON?
NO
YES
S4
V=5?
YES
NO
S5
START TIMER
S13
V=1?
YES
NO
S14
START TIMER
S6
V=4?
NO
YES
S7
V ← V+1
S15
V=2?
NO
YES
S16
V ← V−1
S8
0.5 SEC?
NO
YES
S9
▲ OFF?
NO
YES
S18
▼ OFF?
NO
YES
S17
0.5 SEC?
NO
YES
S10
≧2 SEC?
NO
YES
S19
≧2 SEC?
NO
YES
S11
2ND MODE?
YES
NO
S20
2ND MODE?
YES
NO
S12
V ← 5
S21
V ← 1

FIG. 4

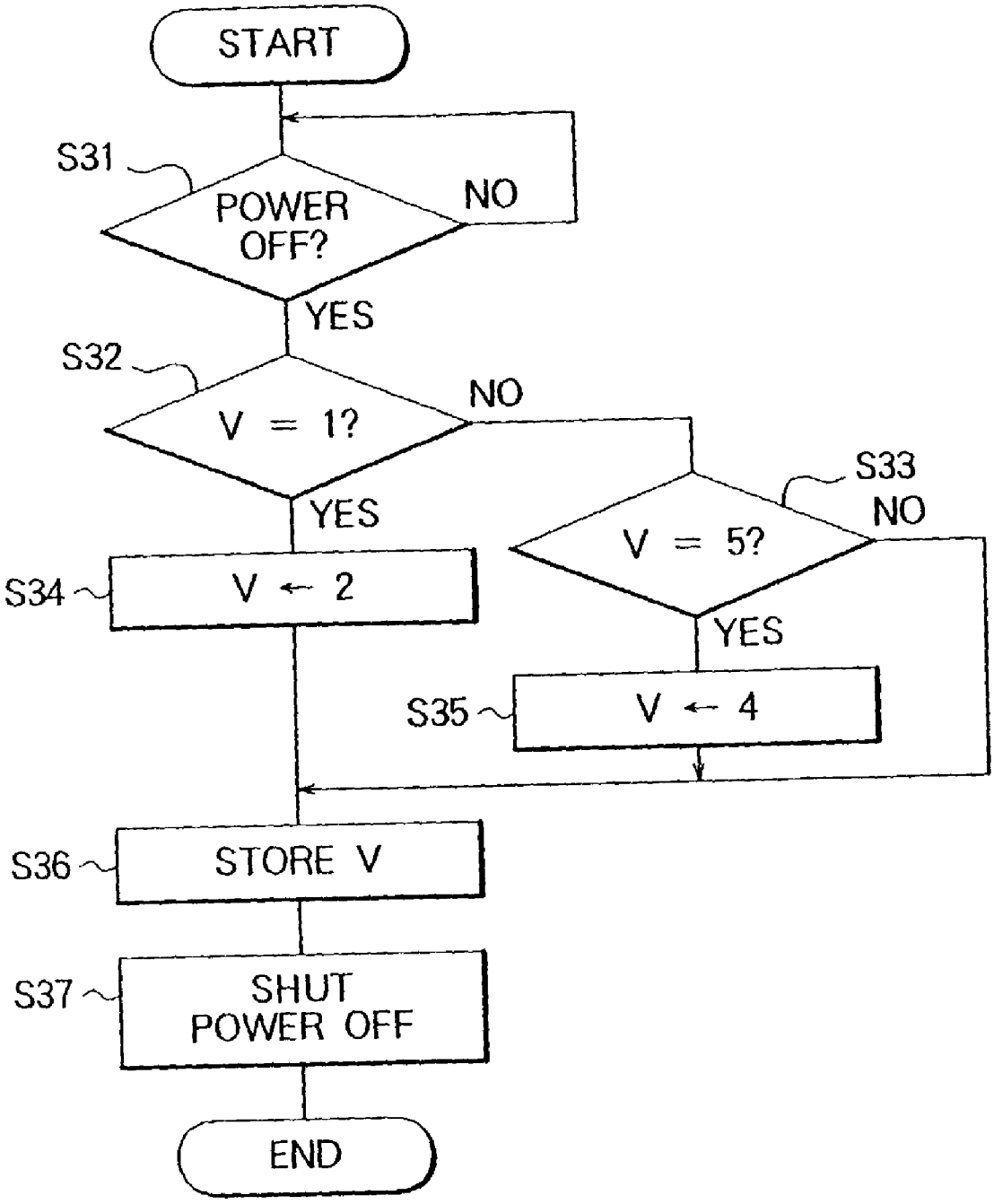
START
S31
POWER OFF?
NO
YES
S32
V = 1?
NO
YES
S33
V = 5?
NO
YES
S34
V ← 2
S35
V ← 4
S36
STORE V
S37
SHUT POWER OFF
END

FIG. 5

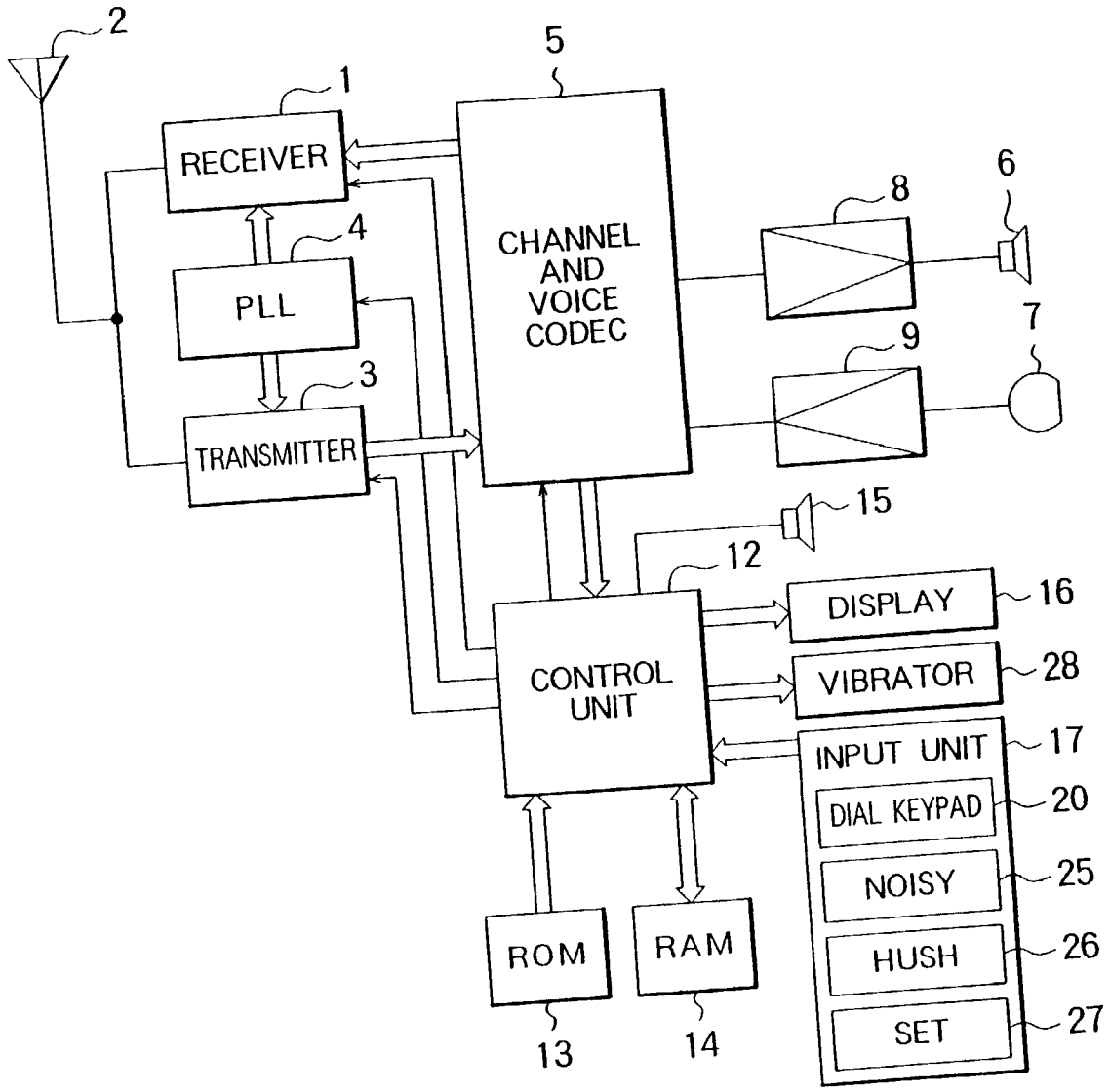
2
1
5
RECEIVER
CHANNEL AND VOICE CODEC
8
6
4
PLL
9
7
3
TRANSMITTER
15
12
DISPLAY
16
CONTROL UNIT
VIBRATOR
28
INPUT UNIT
17
DIAL KEYPAD
20
NOISY
25
HUSH
26
SET
27
ROM
RAM
13
14

FIG. 6

	NORMAL MODE		NOISY MODE	HUSH MODE
	RANGE	INIT.		
LOUDSPEAKER VOLUME	SOFT/MEDIUM/LOUD	MEDIUM	VERY LOUD	–
MICROPHONE SENSITIVITY	OFF/LOW/MEDIUM/HIGH	MEDIUM	–	VERY HIGH
RINGER VOLUME	OFF/SOFT/MEDIUM/LOUD	MEDIUM	VERY LOUD	OFF
VIBRATOR	ON/OFF	OFF	ON	ON
CLICK TONE	ON/OFF	ON	–	OFF

FIG. 7

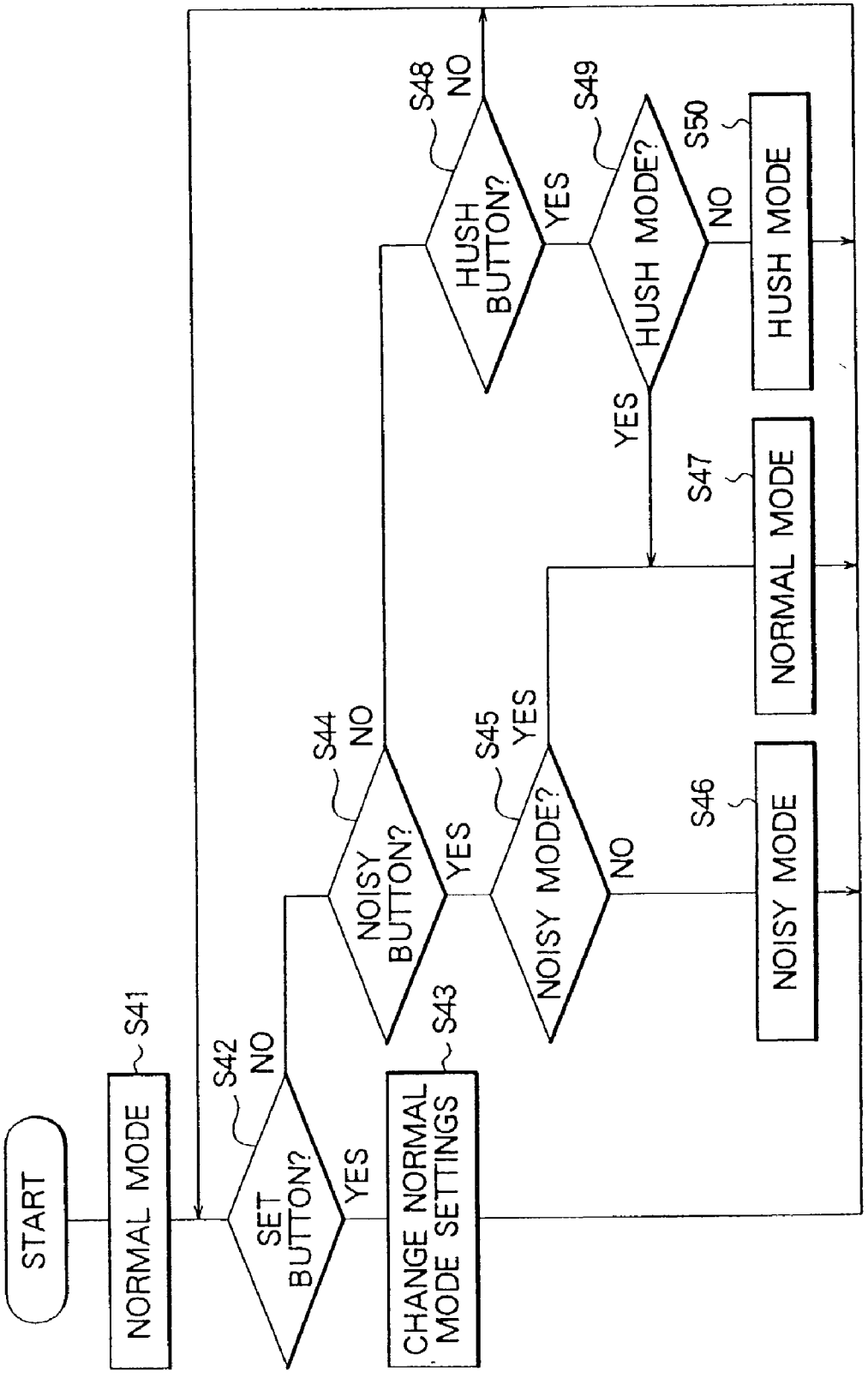
START
NORMAL MODE
S41
SET BUTTON?
S42
NO
YES
CHANGE NORMAL MODE SETTINGS
S43
NOISY BUTTON?
S44
NO
YES
NOISY MODE?
S45
YES
NO
NOISY MODE
S46
NORMAL MODE
S47
HUSH BUTTON?
S48
NO
YES
HUSH MODE?
S49
YES
NO
HUSH MODE
S50

FIG. 8

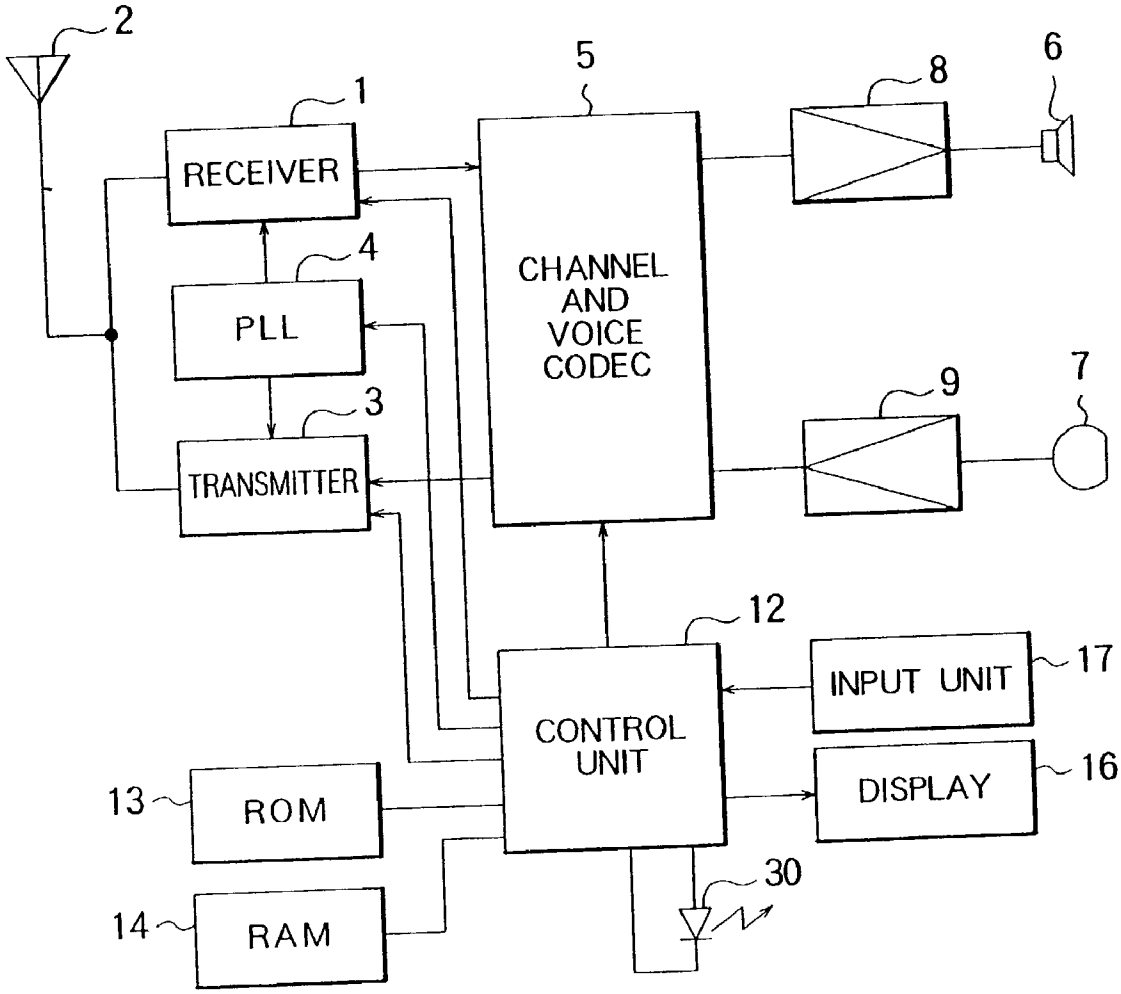
2
1
RECEIVER
4
PLL
3
TRANSMITTER
5
CHANNEL AND VOICE CODEC
8
6
9
7
12
CONTROL UNIT
INPUT UNIT
17
DISPLAY
16
13
ROM
14
RAM
30

FIG. 9

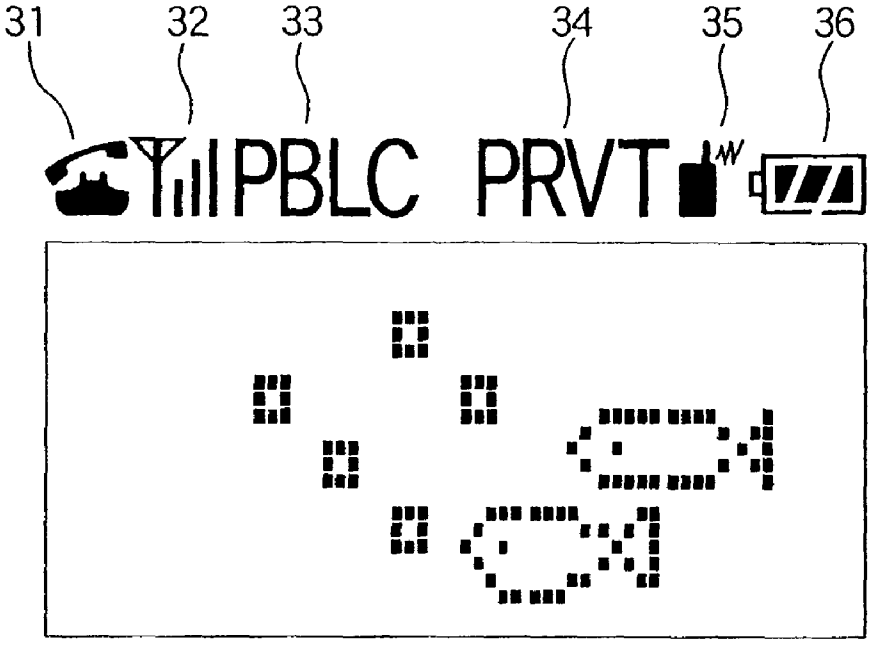

FIG. 10

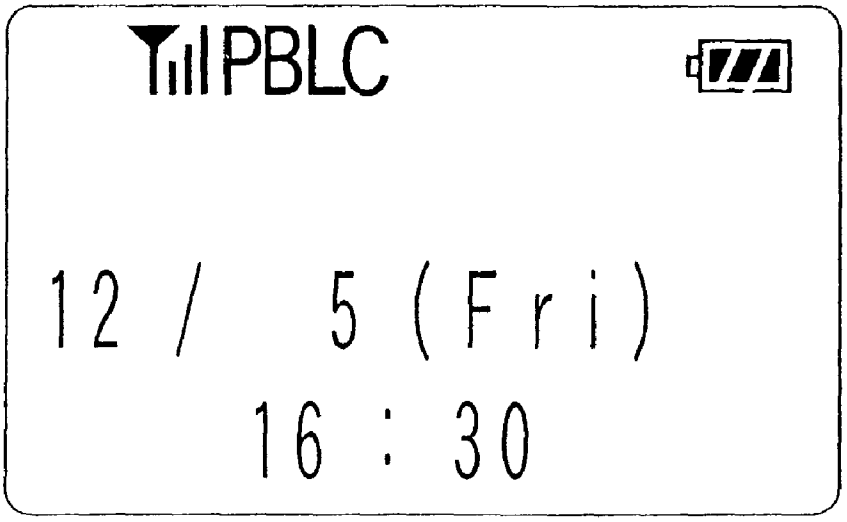

FIG. 11A

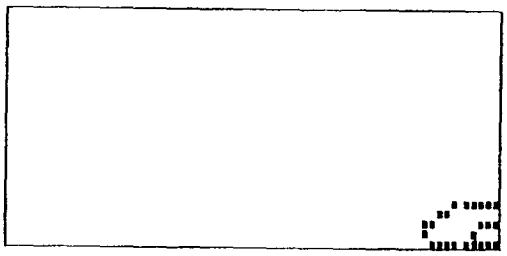

FIG. 11B

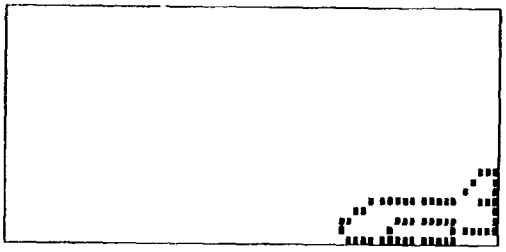

FIG. 11C

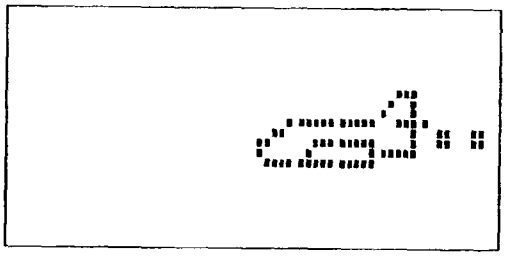

FIG. 11D

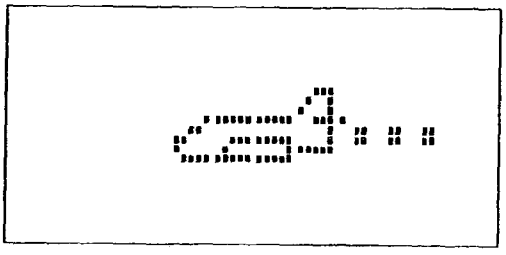

FIG. 11E

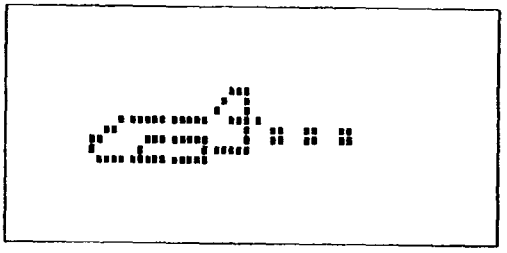

FIG. 11F

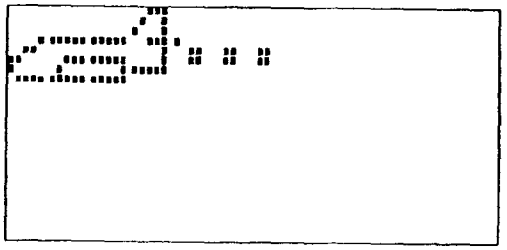

FIG. 11G

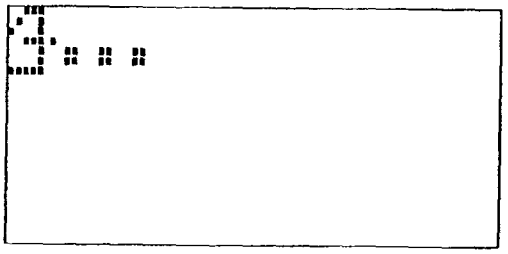

FIG. 12

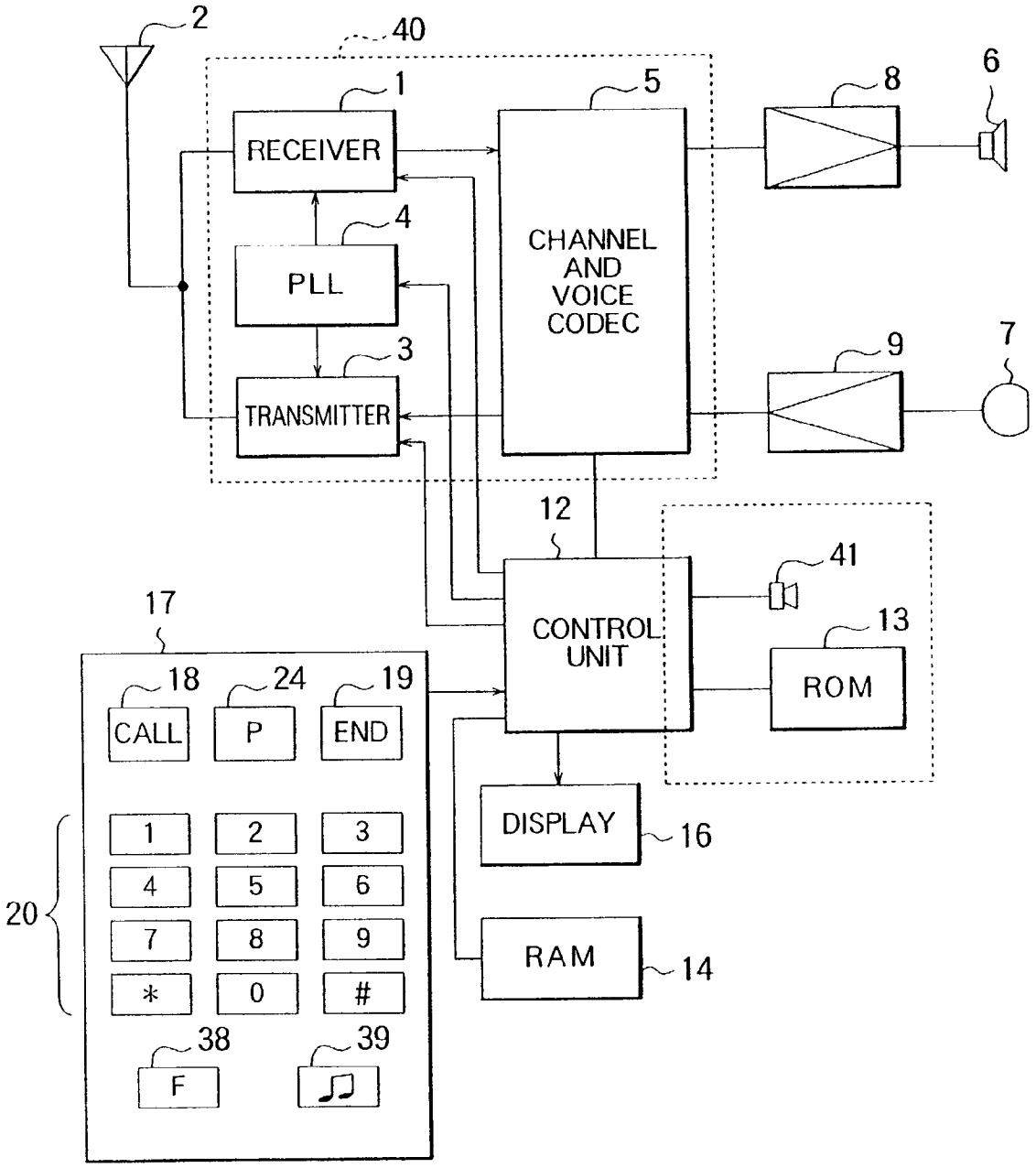
2
40
1
RECEIVER
5
CHANNEL AND VOICE CODEC
8
6
4
PLL
3
TRANSMITTER
9
7
12
41
17
CONTROL UNIT
13
ROM
18
CALL
24
P
19
END
DISPLAY
16
20
1
2
3
4
5
6
7
8
9
*
0
#
RAM
14
38
F
39

FIG. 13

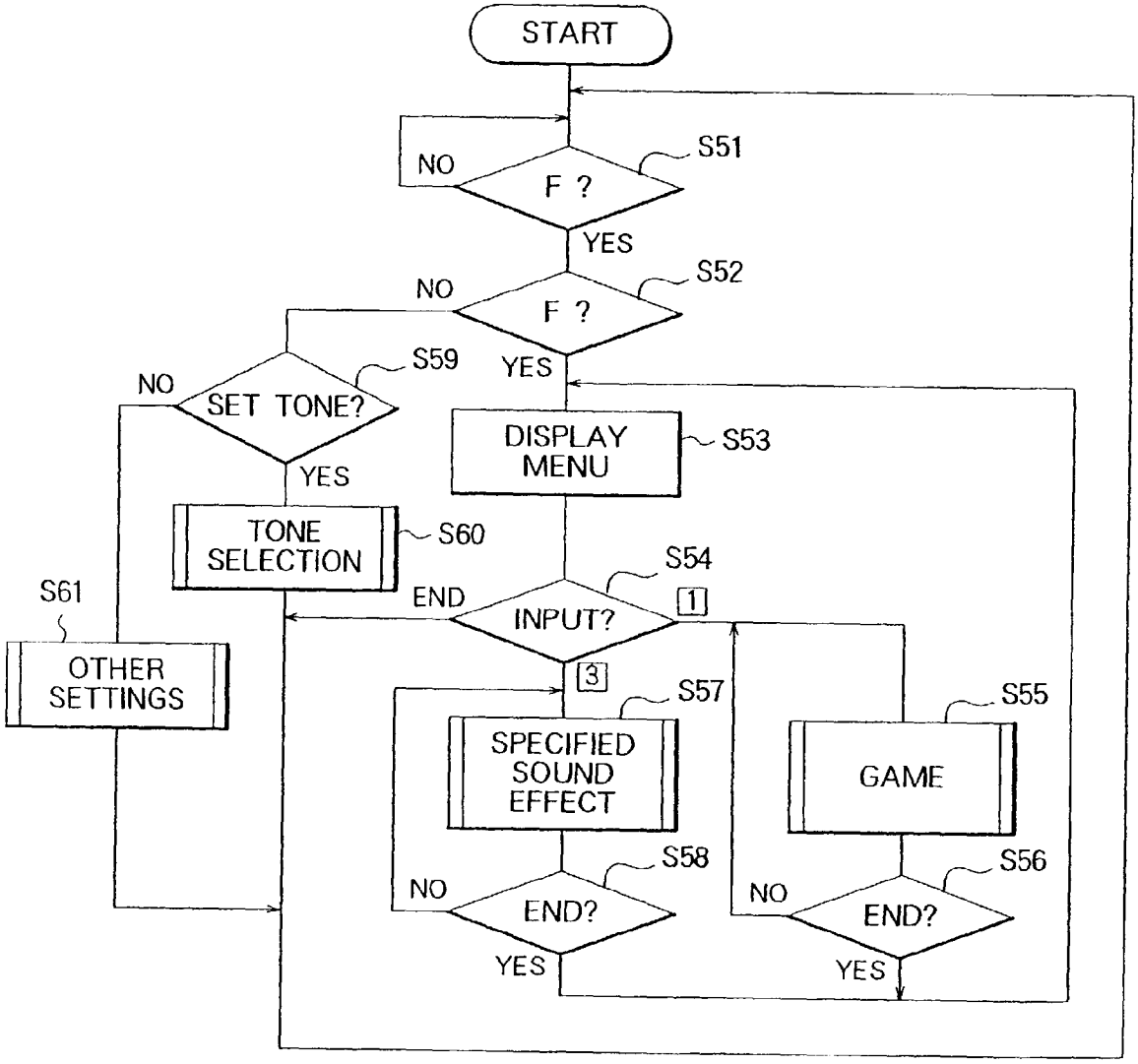
START
S51
NO
F ?
YES
S52
NO
F ?
YES
S59
NO
SET TONE?
YES
DISPLAY MENU
S53
TONE SELECTION
S60
S61
OTHER SETTINGS
S54
END
INPUT?
1
3
S57
SPECIFIED SOUND EFFECT
S58
NO
END?
YES
S55
GAME
S56
NO
END?
YES

FIG. 14

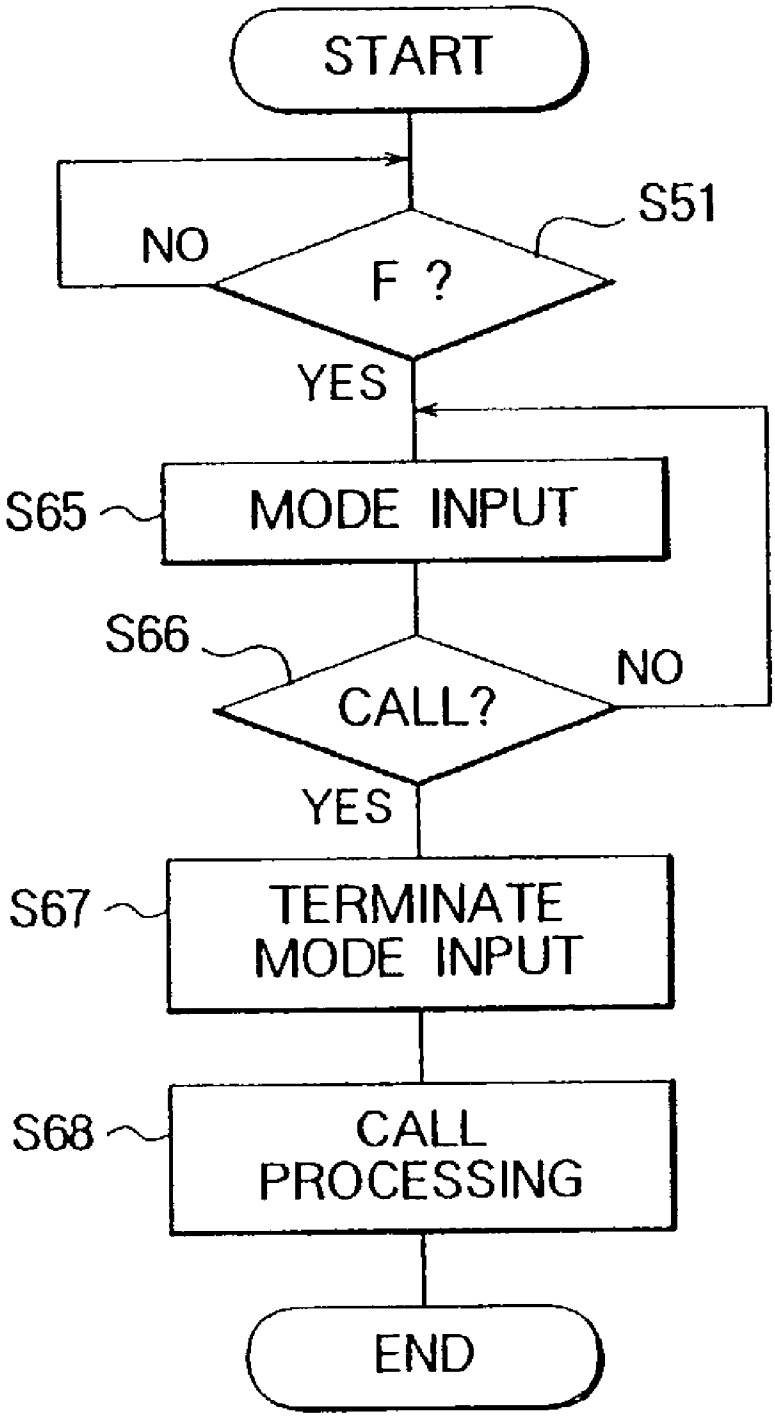
START
S51
NO
F ?
YES
S65
MODE INPUT
S66
CALL?
NO
YES
S67
TERMINATE MODE INPUT
S68
CALL PROCESSING
END

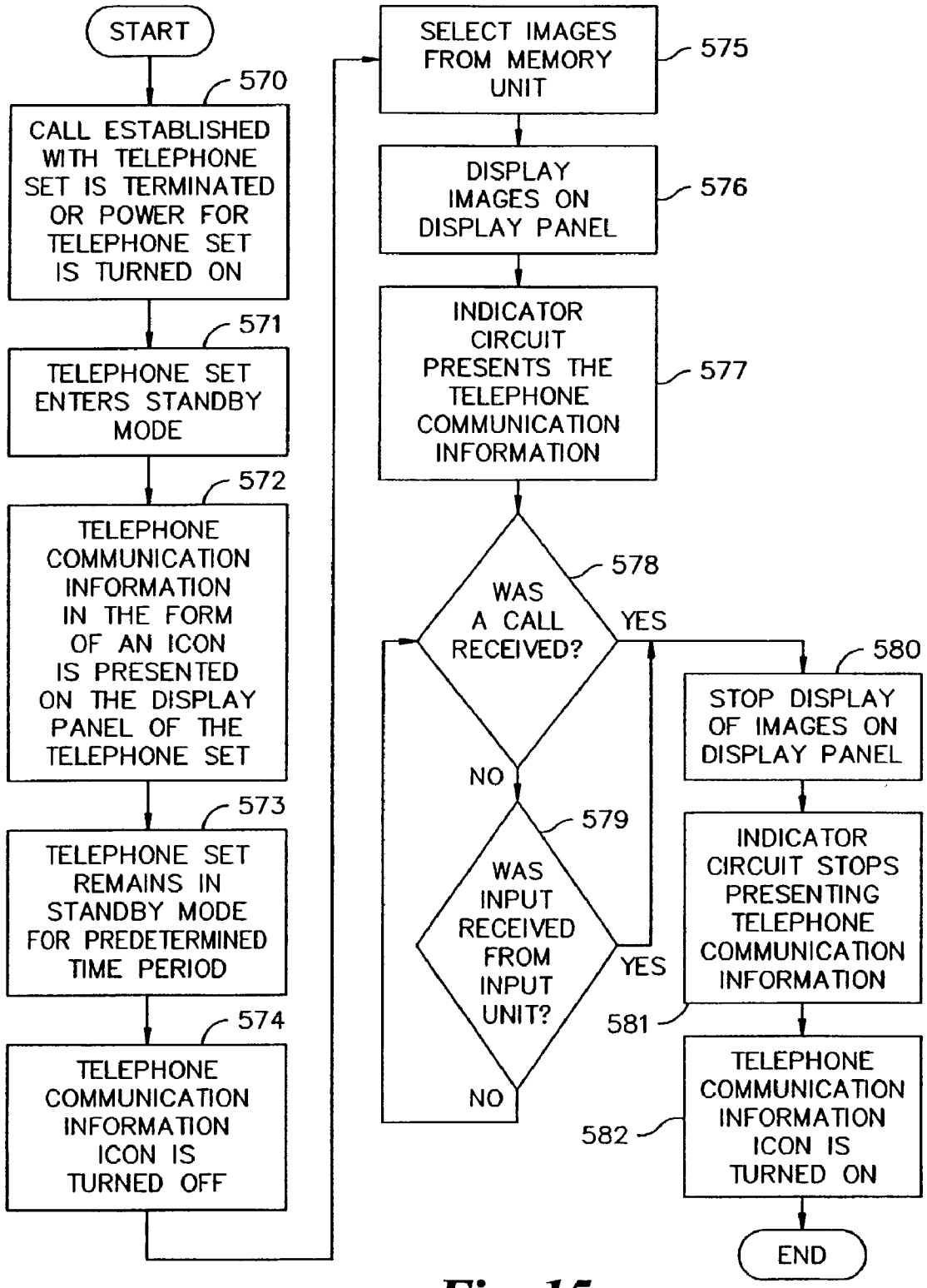
START
570
CALL ESTABLISHED WITH TELEPHONE SET IS TERMINATED OR POWER FOR TELEPHONE SET IS TURNED ON
571
TELEPHONE SET ENTERS STANDBY MODE
572
TELEPHONE COMMUNICATION INFORMATION IN THE FORM OF AN ICON IS PRESENTED ON THE DISPLAY PANEL OF THE TELEPHONE SET
573
TELEPHONE SET REMAINS IN STANDBY MODE FOR PREDETERMINED TIME PERIOD
574
TELEPHONE COMMUNICATION INFORMATION ICON IS TURNED OFF
SELECT IMAGES FROM MEMORY UNIT
575
DISPLAY IMAGES ON DISPLAY PANEL
576
INDICATOR CIRCUIT PRESENTS THE TELEPHONE COMMUNICATION INFORMATION
577
578
WAS A CALL RECEIVED?
YES
NO
579
WAS INPUT RECEIVED FROM INPUT UNIT?
YES
NO
580
STOP DISPLAY OF IMAGES ON DISPLAY PANEL
INDICATOR CIRCUIT STOPS PRESENTING TELEPHONE COMMUNICATION INFORMATION
581
TELEPHONE COMMUNICATION INFORMATION ICON IS TURNED ON
582
END

Fig. 15

TELEPHONE SET WITH SPECIAL SOUND EFFECT MODE

CROSS-REFERENCE TO RELATED APPLICATIONS

[0001] This application is a division of application Ser. No. 09/179,664 filed Oct. 27, 1998, entitled TELEPHONE SET WITH SWITCHABLE INFORMATION AND IMAGE DISPLAY, the entire disclosure of which is incorporated herein by reference.

BACKGROUND OF THE INVENTION

[0002] The present invention relates to a telephone set, in particular to a portable telephone set.

[0003] Battery-operated portable wireless telephone sets ranging from vehicular models to pocketsize sets have come into common use. Many portable telephone sets have functions not found in wired telephone sets. A simple example is a power switch enabling the telephone set to be switched off when calls are not expected, to conserve battery power.

[0004] Another feature is a volume control that can adjust the loudspeaker volume for use in various environments. Many portable telephone sets store the volume setting in a non-volatile memory while power is switched off, and restore the same setting the next time power is switched on, so that the user does not have to adjust the volume every time the telephone set's power is switched on.

[0005] Many portable telephone sets also have an expanded range of loudspeaker volume settings, including very soft and very loud settings. The very soft setting is used to avoid disturbing people nearby, or to avoid having a telephone conversation overheard. The very loud setting is used in noisy environments, to make the distant party's voice audible.

[0006] Another function found in many portable telephone sets is a vibration function that alerts the user to arriving calls by means of a vibrator. This function is useful in noisy environments, and in situations in which the user does not want to disturb people nearby.

[0007] Yet another function is a selection of different types of ringing tones, as taught in Japanese Unexamined Patent Publication No. 202994/1995. This function enables the user to distinguish the ringing tone of his or her telephone set from the ringing tones of other nearby telephone sets.

[0008] Still another function is a selection of hold melodies and other sound effects, sometimes including loud non-musical sound effects that can be used to discourage malicious callers.

[0009] A further function is a small liquid-crystal display panel that displays the time, date, telephone numbers, battery status, short messages, and other relevant information.

[0010] A still further function, taught in Japanese Unexamined Patent Publication No. 237393/1996, is an interface enabling the telephone set to be connected to a television set, so that the above information, and possibly other information such as images, not necessarily relevant to telephone communication, can be displayed on a large screen.

[0011] Although useful, these functions also make the telephone set more complex and more difficult to operate, and invite various types of operation mistakes. For example, if the user selects the very loud volume setting while using the telephone set in a noisy environment, and forgets to reset the volume when the call is finished, a later call in a more quiet environment may startle the user or people nearby. If the user selects the very soft volume while using the telephone set during a meeting, and forgets to reset the volume, a later call in a different environment may be difficult to hear, requiring a hasty readjustment of the volume.

[0012] Many telephone sets have a first loudspeaker for use when held close to the ear, and a second loudspeaker for use at a distance from the ear. The very soft and very loud volume settings are useful with the first loudspeaker, but if these settings are transferred inadvertently to the second loudspeaker, the distant party's voice becomes barely audible or disturbingly loud.

[0013] Selection of the vibration function is troublesome because the user must also decide whether to enable or disable the ringer, and whether to increase or decrease the microphone sensitivity, these decisions depending on whether the vibration function is used in a quiet or noisy environment. The user is required to make multiple settings for each situation.

[0014] The utility of a selection of different ringing tones is limited, because these ringing tones tend to sound alike. Identification of a particular ringing tone can be especially difficult when the telephone is carried in a purse or briefcase, or in an inner pocket under heavy clothing.

[0015] The utility of sound effects in discouraging malicious callers is offset by the misuse of the same sound effects to originate malicious calls.

[0016] The utility of a display of the date and time is limited because a person using a portable telephone set is likely to be wearing a wristwatch that gives the date and time more conveniently. Furthermore, the generally drab displays found on conventional portable telephone sets compare unfavorably with the attractive and fashionable dial faces of wristwatches. In addition, the display of fixed information such as telephone numbers during standby periods is uninteresting, and may give the false impression that the telephone set is malfunctioning, because the information does not change.

[0017] Connection of a portable telephone set to a television set quickly drains the battery of the telephone set, thereby lessening the utility of the telephone set for communication purposes.

[0018] Thus for various reasons, conventional portable telephone sets are somewhat difficult to operate, and their sound effects and display functions are not as useful as might be desired.

SUMMARY OF THE INVENTION

[0019] In a preferred embodiment of the present invention, a telephone set includes a receiving circuit, a display panel, and an input unit with manual controls. The memory unit stores a plurality of images. A control unit monitors elapsed time and input from the input unit. The control unit selects the images from the memory unit, displays the images on the display panel, and automatically switches the display panel

from displaying the images to displaying information when a call is received by the telephone set. The images are automatically displayed after a predetermined time period has elapsed, during which the telephone set has entered and remained in a standby state waiting for a call to arrive, without an input from the input unit. While displaying the images, the display panel also displays an indication of whether the telephone set is within communicable range of a base station.

[0020] In an alternate embodiment of the present invention, a telephone set includes a display panel, a memory unit, an indicator circuit and a control unit. The memory unit stores a plurality of images. The indicator circuit operates independent of the display panel. The control unit selects the images from the memory unit, displays the images on the display panel, and automatically switches the display panel from displaying the images to displaying information when a call is received by the telephone set. Telephone communication information is presented by the indicator circuit when the images are displayed, and the telephone communication information is presented by the display panel when the images are not displayed.

[0021] In yet another embodiment of the present invention, the control unit automatically switches the display panel from displaying information to displaying the images a predetermined time after the telephone set enters a standby mode.

BRIEF DESCRIPTION OF THE SEVERAL VIEWS OF THE DRAWINGS

[0022] The following detailed description of preferred embodiments of the invention will be better understood when read in conjunction with the appended drawings. For the purpose of illustrating the invention, there are shown in the drawings embodiments which are presently preferred. It should be understood, however, that the invention is not limited to the precise arrangements and instrumentalities shown.

[0023] In the attached drawings:

[0024] **FIG. 1** is a block diagram illustrating a first embodiment of the invention;

[0025] **FIG. 2** is a chart of microphone sensitivity and loudspeaker volume settings;

[0026] **FIG. 3** is a flowchart illustrating the volume setting operation of the first embodiment;

[0027] **FIG. 4** is a flowchart illustrating the storing of volume settings at power-off;

[0028] **FIG. 5** is a block diagram illustrating a second embodiment of the invention;

[0029] **FIG. 6** is a chart of vibrating settings and other settings;

[0030] **FIG. 7** is a flowchart illustrating the operation of the second embodiment;

[0031] **FIG. 8** is a block diagram illustrating a third embodiment of the invention;

[0032] **FIG. 9** illustrates the display panel in the third embodiment;

[0033] **FIG. 10** illustrates a display of information on the display panel;

[0034] **FIGS. 11A, 11B**, 11C, 11D, 11E, 11F, and 11G illustrate a display of images on the display panel;

[0035] **FIG. 12** is a block diagram illustrating a fourth embodiment of the invention;

[0036] **FIG. 13** is a flowchart illustrating the operation of the fourth embodiment;

[0037] **FIG. 14** is a flowchart illustrating the operation of a variation of the fourth embodiment; and

[0038] **FIG. 15** is a flowchart illustrating the operation of the third embodiment of the invention.

DETAILED DESCRIPTION OF THE INVENTION

[0039] Embodiments of the invention will be described with reference to the attached illustrative drawings. The embodiments are portable telephone sets of the type used in the Japanese Personal Handyphone System (PHS), for example, to communicate with a public telephone network through a public base station or cell station, or through a private base station in a home or office, or to communicate directly with another portable telephone set of the same type.

[0040] The Personal Handyphone System is a time-division multiple access (TDMA) system employing time-division duplex (TDD) communication, quaternary phase-shift keying (QPSK), and adaptive differential pulse code modulation (ADPCM). One of the components of the embodiments below is a channel and voice coder-decoder or codec, which is an integrated circuit comprising a channel codec and a voice codec. The channel codec performs QPSK modulation and demodulation, TDMA/TDD multiplexing and demultiplexing, and other functions such as the calculation of a cyclic redundancy check (CRC) code. The voice codec performs ADPCM coding and decoding functions, including compression, expansion, analog-to-digital conversion, and digital-to-analog conversion.

[0041] Each of the embodiments below also has a receiver that receives wireless signals through an antenna, and a transmitter that transmits wireless signals through the same antenna. A phase-locked loop (PLL) provides signals of selectable frequencies to the receiver and transmitter. During a telephone call, the receiver uses the signal from the PLL to down-convert the frequency of the received wireless signal, and supplies the down-converted signal to the above-described channel and voice codec, which converts the received signal to an analog voice signal. The analog voice signal is normally reproduced through a loudspeaker held close to the user's ear. The user speaks into a microphone, producing an analog voice signal that is coded and modulated onto a carrier signal by the channel and voice codec, then transmitted by the transmitter. The received and transmitted analog voice signals are amplified by respective amplifiers.

[0042] Referring to **FIG. 1**, the first embodiment is a portable telephone set comprising a receiver **1**, antenna **2**, transmitter **3**, PLL **4**, channel and voice codec **5**, loudspeaker **6**, microphone **7**, and amplifiers **8** and **9** as described above. Loudspeaker **6** will be referred to as the first loudspeaker. The first embodiment also has a second loudspeaker **10** for

use at a distance from the user's ear, and a more powerful amplifier **11** that amplifies the received signal when the second loudspeaker **10** is used. The telephone set may also have a second microphone (not visible) for use with the second loudspeaker **10**.

[**0043**] A control unit **12** such as a microprocessor controls the telephone set by executing a control program stored in a read-only memory (ROM) **13**. The control unit **12** includes an internal timer (not visible). A random-access memory (RAM) **14** stores volume settings and other information needed by the control unit **12**. A ringer **15** generates a ringing tone to inform the user of arriving calls. A liquid-crystal display panel **16** displays telephone numbers and other information.

[**0044**] The telephone set has an input unit **17** with various manual control buttons and keys, including a call button **18** for originating and answering calls, an end button **19** for terminating calls, a dial keypad **20** for entering telephone numbers, two volume control buttons **21** and **22**, a speaker (SPKR) button **23** that selects the first loudspeaker **6** or second loudspeaker **10**, and a power (P) on-off button **24**. The volume control buttons will also be referred to as the up button **21** and down button **22**.

[**0045**] Next the operation of the first embodiment will be described. The description will be confined to operations related to volume control.

[**0046**] The telephone set operates in two modes, depending on which loudspeaker is selected. When a call is originated or answered, the telephone set operates initially in the first mode, using the first loudspeaker **6**. To select the second mode and use the second loudspeaker **10**, the user must press the speaker button **23**.

[**0047**] In the first mode, the user can use the volume control buttons **21** and **22** to set the loudspeaker volume in a five-step range, the five settings being very soft, soft, medium, loud, and very loud. Pressing the up button **21** increases the volume. Pressing the down button **22** decreases the volume. In the second mode, the volume control buttons **21** and **22** operate in a three-step subrange with only the soft, medium, and loud settings.

[**0048**] The control unit **12** expresses the volume setting by means of a variable V as shown in **FIG. 2**, values of V from one to five designating volume settings from very soft to very loud. The control unit **12** sets the value of V in an internal register (not visible) and controls the channel and voice codec **5** so that received voice signals are reproduced at the designated volume level. When the user selects the very soft setting (V=1), the control unit **12** also causes the channel and voice codec **5** to increase the encoded volume of the transmitted voice signal, thereby increasing the microphone sensitivity, because the user is presumably speaking softly to avoid disturbing people nearby, or to avoid being overheard.

[**0049**] When power is switched off by the power button **24**, the control unit **12** stores a value of V in the RAM **14**. The RAM **14** is backed up by the telephone set's battery so that the memory contents are retained even while power is off. The value originally stored in the RAM **14** when the telephone set is manufactured is three (V=3).

[**0050**] When power is switched on, the control unit **12** controls the loudspeaker volume according to the flowchart in **FIG. 3**. Initially, the control unit **12** reads the value of V from the RAM **14** (step S1), and operates according to the stored volume setting. The control unit **12** also monitors the volume control buttons (steps S2 and S3).

[**0051**] If the up button **21** is pressed, giving a yes (Y) result in step S2, the control unit **12** determines whether the current value of V is equal to five (step S4). If so, the control unit **12** ignores the input from the up button **21** and returns to step S2. If not, the control unit **12** starts its internal timer (step S5), and determines whether V is equal to four (step S6). If V is not equal to four, the control unit **12** increments V (step S7) to increase the volume setting, waits for half a second (step S8), then returns to step S2.

[**0052**] If V is equal to four, the control unit **12** waits for the up button **21** to be released (step S9), then determines from the timer value whether the up button was pressed for at least two seconds (step S10). If not, the control unit **12** returns to step S2. If so, the control unit **12** determines whether the second mode, using the second loudspeaker **10**, is currently selected (step S11), and returns to step S2 if it is. If the present mode is the first mode, the control unit **12** sets V to five (step S12) to select the very loud volume setting, then returns to step S2.

[**0053**] Similar operations are performed when the down button **22** is pressed. After recognizing the button-press in step S3, the control unit **12** determines whether V is equal to one (step S13), and returns to step S2 if this is the case. If V is greater than one, the control unit **12** starts the timer (step S14) and determines whether V is equal to two (step S15). If V is not equal to two, the control unit **12** decrements V (step S16), waits for half a second (step S17), then returns to step S2. If V is equal to two, the control unit **12** waits for the down button **22** to be released (step S18), determines whether the down button was pressed for at least two seconds (step S19), and determines whether the first or second mode is currently selected (step S20). If the down button **22** was not pressed for at least two seconds, or if the second mode is selected, the control unit **12** returns to step S2. If the down button **22** was pressed for at least two seconds and the first mode is selected, the control unit **12** sets V to one (step S21) to select the very soft volume setting, then returns to step S2.

[**0054**] When, for example, V is equal to three and the first mode is selected, if the down button **22** is pressed for three seconds, the control unit **12** uses a small fraction of the first second to execute steps S2, S3, S13, S14, S15, and S16, reducing V to two. After waiting for half a second in step S17, the control unit **12** executes steps S2, S3, S13, S14, S15, and S18 in approximately 2.5 seconds, then executes steps S19, S20, and S21, reducing V to one.

[**0055**] The procedure in **FIG. 3** allows the full range of V settings from one to five to be selected in the first mode, but restricts V to the subrange from two to four in the second mode, thereby preventing the very soft and very loud volume settings from being used with the second loudspeaker **10**, for which these two settings are inappropriate. This procedure also allows the same two volume control buttons **21** and **22** to control the volume of both loudspeakers **6** and **10**, an advantage in a small telephone set without space for many buttons, and an advantage to the user because the volume control operations are easy to learn.

[**0056**] **FIG. 4** shows the procedure followed when power is switched off. The control unit **12** monitors the power

button **24** (step S**31**). When the power button **24** is pressed, the control unit **12** tests the value of V (steps S**32** and S**33**). If V is equal to one, the control unit **12** changes V to two (step S**34**). If V is equal to five, the control unit **12** changes V to four (step S**35**). The value of V is then stored in the RAM **14** (step S**36**), after which power is shut off (step S**37**). The stored value will be read by the control unit **12** the next time power is switched on.

[**0057**] The procedure in **FIG. 4** prevents the very soft and very loud volume settings from being stored in the RAM **14** while power is off. Thus, regardless of how the telephone set was used previously, when its power is switched on, the initial volume setting is neither inaudibly soft nor disturbingly loud.

[**0058**] In a variation of the first embodiment, the range of volume settings available in the first mode is an arbitrary range, not necessarily limited to five steps. In the second mode, the volume settings are restricted to a first subrange of this range. When power is switched off, the volume setting stored in the RAM **14** is restricted to a second subrange, which need not be identical to the first subrange. If the setting is not in the second subrange when power is switched off, the closest setting in the second subrange is stored.

[**0059**] Next, a second embodiment will be described.

[**0060**] Referring to **FIG. 5**, the second embodiment is a portable telephone set comprising a receiver **1**, antenna **2**, transmitter **3**, PLL **4**, channel and voice codec **5**, loudspeaker **6**, microphone **7**, and amplifiers **8** and **9** as described above. A second loudspeaker (not visible) may be provided for use at a distance from the ear.

[**0061**] The second embodiment also has a control unit **12**, comprising a microprocessor or the like, coupled to a read-only memory (ROM) **13** storing a control program, a random-access memory (RAM) **14** storing mode settings and various other data, a ringer **15** that generates ringing tones to announce arriving calls, a liquid-crystal display panel **16** displaying various information, and an input unit **17** with various keys and buttons, including a dial keypad **20**, a noisy mode button **25**, a hush mode button **26**, and a normal mode setting button **27**. The telephone set can be set to emit a click tone when the buttons and keys in the input unit **17** are pressed. The control unit **12** is also coupled to a vibrator **28** that announces arriving calls by vibrating.

[**0062**] Next, the operation of the second embodiment will be described.

[**0063**] Referring to **FIG. 6**, the telephone set has a normal mode, a noisy mode, and a hush mode. In the normal mode, the loudspeaker volume, microphone sensitivity, and ringer volume can each be set in a three-step range (soft, medium, loud, or low, medium, high), the initial setting being medium in each case. The microphone **7** and ringer **15** can also be switched off. The vibrator **28** and click tone can be switched on or off; that is, they can be enabled or disabled. Initially, the vibrator **28** is switched off and the click tone is switched on. The initial settings are stored in the ROM **13**.

[**0064**] In the noisy mode, the loudspeaker volume and ringer volume are set to a very loud level, and the vibrator **28** is enabled, so that arriving calls will be announced by both the ringer **15** and vibrator **28**. The microphone sensitivity is left unchanged, and the click-tone setting is left unchanged. The noisy mode is useful in noisy environments.

[**0065**] In the hush mode, the loudspeaker volume is left unchanged, but the microphone sensitivity is increased to a very high level, so that the user can speak in a hushed voice. The ringer **15** is switched off, the vibrator **28** is enabled, and the click tone is switched off. Arriving calls will be announced only by the vibrator. This mode is useful when the user does not want to disturb people nearby, or does not want to be overheard.

[**0066**] Referring to **FIG. 7**, the control unit **12** starts operating in the normal mode with the initial settings (step S**41**). If the normal mode setting button **27** is pressed (Y in step S**42**), the control unit **12** displays a setting menu on the display panel **16**, and the user uses the dial keypad **20** to select desired settings (step S**43**). The selected settings are stored in the RAM **14**.

[**0067**] When the noisy mode button **25** is pressed (Y in step S**44**), then if the present mode is not the noisy mode (N in step S**45**), the control unit **12** changes the loudspeaker, ringer, and vibrator settings to the noisy-mode values indicated in **FIG. 6** (step S**46**). If the present mode is the noisy mode (Y in step S**45**), the control unit **12** restores the normal settings from the RAM **14** (step S**47**).

[**0068**] When the hush mode button **26** is pressed (Y in step S**48**), if the present mode is not the hush mode (N in step S**49**), the control unit **12** changes the microphone sensitivity, ringer, and vibrator settings to the hush-mode values indicated in **FIG. 6** (step S**50**). If the present mode is the hush mode (Y in step S**49**), the control unit **12** restores the normal settings from the RAM **14** (step S**47**).

[**0069**] By pressing the noisy mode button **25** or hush mode button **26** before or during a call, the user can instantly make all of the settings needed to use the telephone set in a noisy environment, or an environment in which the user does not wish to disturb or be overheard by people nearby. By pressing the same button once more, the user can instantly return to the normal mode. The telephone set thus becomes easy to operate.

[**0070**] By pressing the normal mode setting button **27** in the noisy mode or hush mode, the user can change one or more of the settings that were made collectively by pressing the noisy mode button **25** or hush mode button **26**.

[**0071**] In a variation of the second embodiment, the loudspeaker volume and ringer volume are set to the loud level in the noisy mode, instead of being set to a very loud level. Similarly, in the hush mode, the microphone sensitivity may be set to the high level, instead of the very high level, and the ringer **15** may be set to the soft volume level, instead of being switched off. The click tone setting may be left unchanged in the hush mode.

[**0072**] In another variation, on return from the noisy mode or hush mode to the normal mode, the control unit **12** restores some or all of the initial settings from the ROM **13**, instead of restoring the settings stored in the RAM **14**.

[**0073**] Next, a third embodiment will be described.

[**0074**] Referring to **FIG. 8**, the third embodiment is a portable telephone set comprising a receiver **1**, antenna **2**,

transmitter **3**, PLL **4**, channel and voice codec **5**, loudspeaker **6**, microphone **7**, and amplifiers **8** and **9** as described above.

[**0075**] The third embodiment also has a control unit **12** coupled to a read-only memory (ROM) **13** storing a control program, a random-access memory (RAM) **14** storing mode settings and various other data, a liquid-crystal display panel **16**, an input unit **17** with various manual control buttons and keys, and a light-emitting diode (LED) indicator **30**.

[**0076**] Referring to **FIG. 9**, the display panel **16** has a row of icons and abbreviations at the top. The telephone icon **31** indicates that a called party's telephone is ringing. The antenna icon **32** indicates electric field strength when the telephone set is within range of a base-station antenna. The abbreviation PBLC **33** indicates the mode for communication with a public base station. The abbreviation PRVT **34** indicates the mode for communication with a private base station. The transceiver icon **35** indicates the mode for direct communication with another portable telephone set. The battery icon **36** indicates remaining battery charge.

[**0077**] Below the row of icons is a dot-matrix portion of the display panel **16**, providing space for the display of simple images, such as the swimming fish shown in the drawing, or for the display of three short lines of text.

[**0078**] Next, the operation of the third embodiment will be described.

[**0079**] At the end of a call, or when power is first switched on, the telephone set enters a standby mode to wait for a call to arrive. For the first five minutes of standby, the control unit **12** displays the date and time on the display panel **16**, together with the relevant icons and abbreviations, as shown in **FIG. 10**, for example.

[**0080**] If no call is received and no buttons or keys are pressed, after five minutes the control unit **12** automatically switches from the date-and-time display to an image display such as the swimming fish shown in **FIG. 9**. The image data for this display are stored in the ROM **13**. The ROM **13** preferably stores several types of images: for example, an image of swimming fish, an image of a flying airplane, and an animal image such the head of a mole. The control unit **12** changes the image type from time to time, preferably in a pseudo-random sequence, or as a pseudo-random function of the time of day, so that the user does not know which type of image will appear next.

[**0081**] The control unit **12** also causes the images to move intermittently. The ROM **13** stores, for example, seven airplane images as shown in **FIGS. 11** A to 11 G. The control unit **12** displays these images one after another, changing from one image to the next at intervals of ten seconds, for example, thus causing the airplane to move slowly across the display panel. Swimming fish can be made to move in the same way. A mole's head can be made to pop up at a random location on the display panel **16**, give a sign of greeting, then sink down toward the bottom of the display panel and disappear.

[**0082**] The images can also be made to move by scrolling, but the necessary scrolling calculations consume power. To conserve battery charge, it is preferable to read pre-stored images intermittently from the ROM **13**.

[**0083**] The display of these images does not affect the normal standby operation of the telephone set. During display of the images, however, the icons and abbreviations at the top of the display panel **16** are preferably turned off, because they distract attention from the image display. While the icons are turned off, the control unit **12** uses the LED indicator **30** to indicate whether the telephone set is within range of a base station.

[**0084**] The telephone set also has a battery saving mode, which is similar to the standby mode except that the receiver **1** is turned on only intermittently, at intervals synchronized with the transmission of paging information from a base station. The image display is also used in the battery saving mode, the images being displayed intermittently, at intervals synchronized with the intervals at which the receiver **1** is turned on.

[**0085**] When a call is received, or when the user presses one of the keys or buttons on the input unit **17**, the control unit **12** automatically switches back from the image display to an information display such as the one in **FIG. 10**. Thus the image display in no way interferes with the normal operation of the telephone set.

[**0086**] By switching during standby from the uninteresting display of the date and time to the more amusing display of images, the third embodiment makes the telephone set more attractive to the user.

[**0087**] By switching from one type of image to another in a pseudo-random manner, the third embodiment avoids operating with boring predictability.

[**0088**] By causing the image to change from time to time, the third embodiment reassures the user that the telephone set is operating normally, particularly in the battery saving mode, in which the image display is synchronized with the operation of the receiver **1**.

[**0089**] By using the LED indicator **30** during image display, the third embodiment continues to inform the user as to whether or not the telephone set is within range of a base station.

[**0090**] Referring to **FIG. 15**, in step S**70**, either a call established with the telephone set is terminated (i.e., at the end of a call), or power for the telephone set is turned on. In response, the telephone set enters a standby mode (step S**71**). In step S**72**, telephone communication information in the form of an icon (antenna icon **32**) is presented on the display panel **16** of the telephone set. In step S**73**, the telephone set remains in the standby mode for a predetermined period of time (e.g., five minutes) if a call is not received, and if input is not received from input unit **17**. After the predetermined time period has elapsed, the telephone communication information icon **32** is turned off (step S**74**). In step S**75**, images stored in ROM (memory unit) **13** are selected by the control unit **12**. The images are displayed on display panel **16** (step S**76**). In step S**77**, the LED indicator (indicator circuit) **30** presents the telephone communication information to indicate whether the telephone set is within range of a base station. When a call is received (step S**78**), or when input is received from input unit **17** (step S**79**), the control unit **12** automatically switches back from the image display to an information display that presents the

telephone communication information (steps **S80**, **S81** and **S82**).

[**0091**] Next, a fourth embodiment will be described.

[**0092**] Referring to **FIG. 12**, the fourth embodiment is a portable telephone set comprising a receiver **1**, antenna **2**, transmitter **3**, PLL **4**, channel and voice codec **5**, loudspeaker **6**, microphone **7**, and amplifiers **8** and **9** as described above. The fourth embodiment also has a control unit **12** such as a microprocessor, which is coupled to a read-only memory (ROM) **13**, a random-access memory (RAM) **14**, a liquid-crystal display panel **16**, and an input unit **17** with various keys and buttons, including a call button **18**, an end button **19**, a dial keypad **20**, a power (P) on-off button **24**, a function (F) button **38**, and a hold melody button **39**.

[**0093**] The receiver **1**, transmitter **3**, PLL **4**, and channel and voice codec **5** will be referred to below as the communication circuits **40** of the telephone set.

[**0094**] The control unit **12** is also coupled to a sound generator **41**. The control unit **12** includes a sound synthesis circuit (not visible) that synthesizes a variety of sound waveforms, using audio data stored in the ROM **13**, the synthesized waveforms being reproduced as sound by the sound generator **41**. The sound synthesis function of the control unit **12** may be partly implemented by software, which may be stored in the ROM **13** or in a separate memory integrated into the control unit **12**. The sound synthesis circuit may also be external to the control unit **12**. The ROM **13**, the sound generator **41**, and the sound synthesis circuit or function will be referred to below as the sound circuits **42** of the telephone set.

[**0095**] Next, the operation of the fourth embodiment will be described, starting from the standby state in which the telephone set's power is switched on and the telephone set is waiting to receive a call.

[**0096**] Referring to **FIG. 13**, the control unit **12** monitors the function (F) button **38** (step **S51**). If the function button **38** is pressed, the control unit **12** enters a mode-input state and waits for the next button press (step **S52**). If the function button **38** is pressed again, the control unit **12** enters a toy mode and displays a mode menu on the display panel **16**.

[**0097**] In the toy mode, the telephone set is employed not for communication, but as an amusement device for the entertainment of the user and his or her companions. The toy mode includes, for example, a game function and a sound-effects function or SFX function. The menu displayed on the display panel **16** in this case has, for example, the following appearance.

[**0098**] TOY MODE

[**0099**] 1. GAME

[**0100**] 3. SFX

[**0101**] After displaying the menu, the control unit **12** waits for the '1' digit key, the '3' digit key, or the end button **19** to be pressed (step **S54**). If the end button is pressed, the control unit **12** terminates mode input and returns to step **S51**.

[**0102**] If the '1' digit key is pressed, the control unit **12** starts a game on the display panel **16**, preferably a game of the type in which the user tries to attain a maximum number of points within a limited time, as the limited time prevents undue battery drain. The user plays the game by pressing, for example, the dial keys **20**. During the game, the control unit **12** monitors these keys and the end button **19** (step **S56**). If the user presses the end button **19** during the game, the control unit **12** terminates the game immediately and returns to the menu display (step **S53**). If the user does not terminate the game in this way, the control unit **12** returns to the menu display (step **S53**) at the end of the game.

[**0103**] If the user presses the '3' digit key while the menu is displayed, the control unit **12** monitors the end button **19** and dial keypad **20**. If the user presses a digit key on the dial keypad **20**, the control unit **12** reads corresponding sound waveform data from the ROM **13**, and synthesizes a sound effect, which is produced through the sound generator **41** (step **S57**). The control unit **12** then continues to monitor the end button **19** and dial keypad **20** (step **S58**). If the user presses another digit key, the control unit **12** synthesizes another sound effect. If the user presses the end button **19**, the control unit **12** returns to the menu display (step **S53**).

[**0104**] The sound effects include simulated vocal effects and various other non-musical sounds. For example, the control unit **12** synthesizes a discontented grumble if the user presses the '0' key, a comical laugh if the user presses the '1' key, and a roaring crowd noise if the use presses the '2' key. Comparatively short, startling sound effects are preferable. Other possible examples include a loud whistle, an angry exclamation, a sad sigh, and a ferocious yell.

[**0105**] If the user presses the end button while the menu is displayed, the control unit **12** terminates mode input and returns to step **S51**.

[**0106**] Mode input can also be used to make settings related to the communication function of the telephone, by pressing the function key **38** once, followed by a numeric code. One group of settings comprises tone and melody settings. For example, the user presses **F13** to select an alarm tone, **F80** to select a ringing tone, **F15** to select a ringing tone announcing a call from a designated number, and **F85** to select a hold melody. After recognizing the code input (steps **S51** and **S59**), the control unit **12** presents a menu of available tones or melodies, from which the user makes a selection with the dial keys **20** (step **S60**). The selection of ringing tones includes both normal ringing tones and more distinctive tones or sound effects. The selection of hold melodies is restricted to musical melodies, and does not include any of the sound effects produced in the SFX mode.

[**0107**] Other groups of settings, not related to tones or melodies, are also provided, as in conventional portable telephone sets (step **S61**). Two tones that cannot be altered are the hand-over tone and the busy tone.

[**0108**] A feature of the fourth embodiment is that angry shouts and other sound effects are producible only for the amusement of the user and his or her companions. These sound effects cannot be transmitted through the communication circuits **40** to a distant party, because mode input is disabled while a call is in progress, and because during mode input, the call button **18** is not recognized, so the user cannot originate or answer a call. Thus there is no risk that a distant caller will be surprised by an unusual sound effect.

[**0109**] Similarly, the user can select unusual ringing tones to suit his or her preferences, but cannot transmit these

unusual tones to the distant party during a call. During a call, the sound circuits **42** can be used only for restricted conventional operations, such as sending a hold melody. There is accordingly no temptation to use the sound circuits **42** to play pranks on the distant party in a telephone call.

[**0110**] By providing a special mode with games and sound effects, the fourth embodiment offers the user and his or her companions a means of entertainment during idle moments, thereby increasing the utility of the telephone set.

[**0111**] By disabling the use of this special mode during calls, the fourth embodiment prevents the distant party in a telephone conversation from being startled by unintended sound effects.

[**0112**] Similarly, the fourth embodiment prevents the sound effects from being used to make malicious or prank calls.

[**0113**] In a variation of the fourth embodiment, the call button **18** is recognized during mode input, but pressing the call button immediately terminates mode input. Referring to **FIG. 14**, the control unit **12** monitors the function (F) key (step **S51**) as above, and enters the mode-input state (step **S65**) when the function key is pressed. During the mode-input state, the control unit **12** performs the operations described in **FIG. 13**, but also monitors the call button **18** (step **S66**). If the call button **18** is pressed, the control unit **12** immediately terminates the mode-input state (step **S67**) and begins call processing operations (step **S68**). As above, in the sound effects producible in the mode-input state cannot be used during calls.

[**0114**] In another variation of the fourth embodiment, the sound generator **41** is also coupled the channel and voice codec **5**, and is used as a second loudspeaker during calls when the telephone set is not held close to the user's ear.

[**0115**] The invention is not limited to PHS telephone sets, but can be practiced to advantage in other types of wireless or cordless telephone sets, with suitable modifications to the channel and voice codec.

[**0116**] Variations of the embodiments have been mentioned above, but those skilled in the art will recognize that further variations are possible within the scope claimed below.

We claim:

1. A telephone set having a display panel, an input unit with buttons and keys, and communication circuits for transmitting and receiving voice signals, said buttons and keys including at least a call button for originating and answering calls, dial keys for entering telephone numbers, and an end button for terminating calls, comprising:

sound circuits for generating sound effects; and

a control unit operating in a special mode in response to predetermined input from said input unit, using said display panel, said input unit, and said sound circuits independently of said communication circuits in said special mode, terminating said special mode when said end button is pressed, and ignoring said call button in said special mode.

2. The telephone set of claim 1, wherein said control unit uses said display panel for game-playing in said special mode.

3. The telephone set of claim 1, wherein said control unit uses said sound circuits to generate a variety of non-musical sound effects in said special mode, in response to input from said input unit.

4. A telephone set having communication circuits for sending and receiving voice signals, and an input unit with buttons and keys, said buttons and keys including at least a call button for originating and answering calls, dial keys for entering telephone numbers, and an end button for terminating calls, comprising:

sound circuits for generating sound effects; and

a control unit operating in a special mode in response to predetermined input from said input unit, using said sound circuits to generate non-musical sound effects in said special mode, and preventing said sound effects from being transmitted through said communication circuits.

5. The telephone set of claim 4, wherein said sound effects include simulated vocal effects.

6. The telephone set of claim 4, wherein said sound effects include comical sound effects.

7. The telephone set of claim 4, wherein said sound effects include startling sound effects.

8. A telephone set having a display panel, an input unit with buttons and keys, communication circuits for transmitting and receiving voice signals, and sound circuits for generating sound effects, said buttons and keys including at least a call button for originating and answering calls, dial keys for entering telephone numbers, and an end button for terminating calls, comprising:

a control unit operating in a special mode in response to predetermined input from said input unit, performing operations independent of said communication circuits in said special mode, terminating said special mode when said call button is pressed, also terminating said special mode when said end button is pressed.

9. The telephone set of claim 8, wherein said input unit comprises a function button, said predetermined input including two consecutive presses of said function button.

10. A telephone set having a display panel, an input unit with buttons and keys, and communication circuits for sending and receiving voice signals, said buttons and keys including at least a call button for originating and answering calls, dial keys for entering telephone numbers, and an end button for terminating calls, comprising:

sound circuits for generating sound effects; and

a control unit operating in a special mode in response to predetermined input from said input unit, using said sound circuits to generate non-musical sound effects in said special mode, said sound effects being selected by input from said dial keys, operations performed in said special mode being independent of said communication circuits.

11. The telephone set of claim 10, wherein said sound effects include simulated vocal effects.

12. The telephone set of claim 10, wherein said sound effects include comical sound effects.

13. The telephone set of claim 10, wherein said sound effects include startling sound effects.

* * * * *