(No Model.)

R. M. HUNTER.

ELECTRIC RAILWAY.

No. 590,310. Patented Sept. 21, 1897.

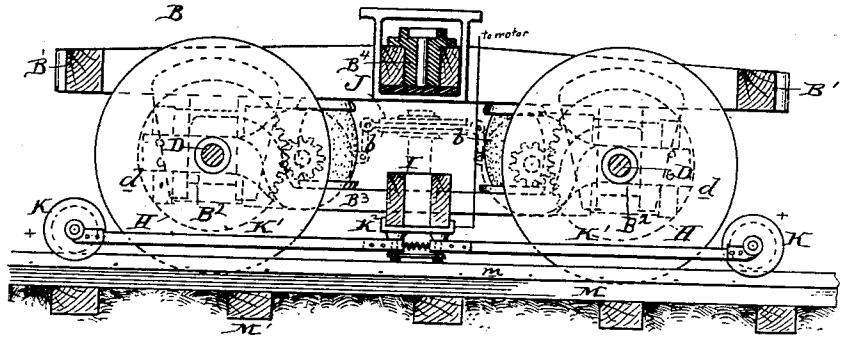

FIG. 1

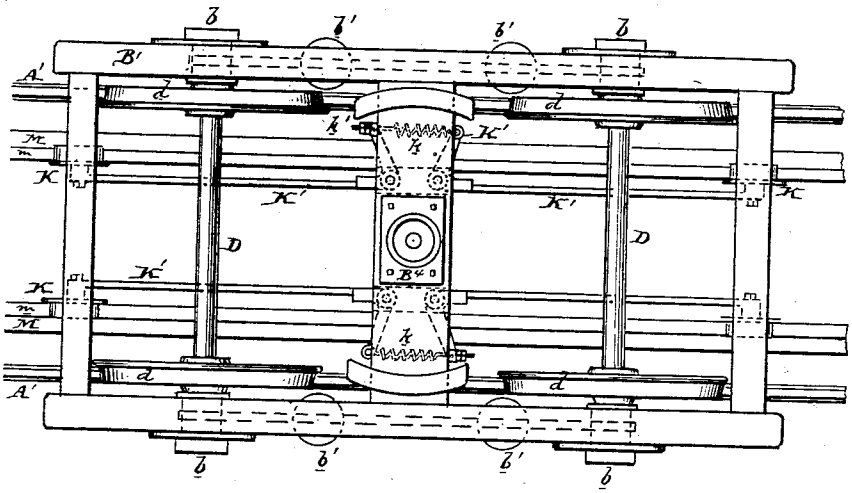

FIG. 2

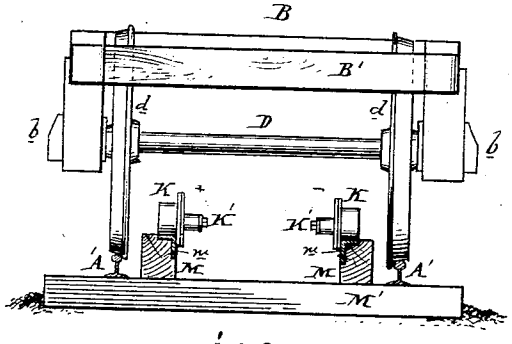

FIG. 3

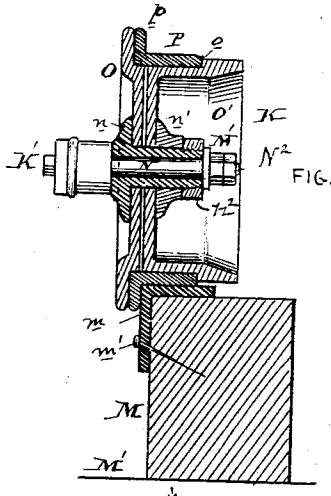

FIG. 4

Attest

E. M. Breckinridge

Harry G. Clark

Inventor

R. M. Hunter

THE NORRIS PETERS CO., PHOTO-LITHO., WASHINGTON, D. C.

UNITED STATES PATENT OFFICE.

RUDOLPH M. HUNTER, OF PHILADELPHIA, PENNSYLVANIA, ASSIGNOR, BY MESNE ASSIGNMENTS, TO THE THOMSON-HOUSTON ELECTRIC COMPANY OF BOSTON, MASSACHUSETTS.

ELECTRIC RAILWAY.

SPECIFICATION forming part of Letters Patent No. 590,310, dated September 21, 1897.

Original application filed October 27, 1886, Serial No. 217,346. Divided and this application filed September 12, 1887. Serial No. 249,463. (No model.)

To all whom it may concern:

Be it known that I, RUDOLPH M. HUNTER, of Philadelphia, in the county of Philadelphia and State of Pennsylvania, have invented an Improvement in Electric Railways, of which the following is a specification.

My invention has reference to electric railways; and it consists in certain improvements fully set out in the following specification and shown in the accompanying drawings, which form part thereof.

This application (Case No. 35) is a division of my application, Serial No. 217,346, of October 27, 1886, and any matters shown but not claimed form subject-matter of said original application and others mentioned hereinafter.

In general my invention relates to a collecting device for collecting the current from an electric conductor extending along the railway; and it consists, essentially, in one or more collector-arms, each connected at one end in a suitable manner to the vehicle and having the other end free to move transversely to the travel of the vehicle and provided with a suitable current-collecting device, preferably a wheel having an annular recess for the conductor, the said contact device making a moving or traveling contact with the conductor which extends along the railway. The collector-arm may be provided with a spring or its equivalent, which may be arranged to cause the contact device to press against the conductor, and this pressure may be regulated by suitable adjusting devices. The conductor may be of any suitable construction and is preferably arranged at a higher elevation than the rails.

In carrying out my invention I may provide the road-bed with longitudinal stringers arranged parallel to the rails, and preferably close to their inner faces, to act as guards to prevent the cars jumping the track, and on the upper inner edges of these stringers I provide working conductors. The stringers are desirably of sufficient height to bring the conductors at a level above the rails to insure perfect insulation. These stringers may be simply dry wood, but it is better that it be saturated or impregnated with paraffin, pitch, or other good waterproofing substance to insure good insulation of the working conductor in damp weather. The electrically-propelled vehicle is provided with collector-wheels which run upon these working conductors and are carried by movable arms pivoted to the vehicle or wheel-truck of same. The wheel is journaled on a transverse axis with reference to the conductor and is formed with two flanges arranged at an angle to each other, so as to form an annular recess in which the conductor is received. The conductor may be of any shape and supported in any desirable manner when my invention is broadly considered.

In the drawings, Figure 1 is a sectional elevation of a truck and conductors with my improved collectors attached thereto. Fig. 2 is a plan view of same. Fig. 3 is an end elevation of car-truck and cross-section of road-bed, and Fig. 4 is a cross-section of one of the collector-wheels and working conductors.

A′ are the rails and are supported to the usual cross-ties M′. Between the rails and preferably close to their inner faces are secured the longitudinal stringers M, preferably formed of wood saturated or impregnated with paraffin or pitch or their equivalent. To the inner or adjacent and upper edges of these stringers are secured the angle-iron working conductors *m*, which are held in place by spikes *m′*, driven through the extended leg of same into the stringers, as shown in Fig. 4. The heads of these spikes will be sufficiently low down not to be struck by the collector-wheels. Any other form of working conductor may be used, if desired. These stringers act not only as insulating-supports for the working conductors, but also as guards to prevent the car jumping the track. By putting the conductors on the side of the stringer farthest from the rail there will be no tendency to contact therewith by the wheels. It is desirable that these stringers be of sufficient height to bring them at some distance above the top of the rails, thereby performing the double duty of better insulation for the working conductors and a more effective guard for the wheels. While I have shown

two working conductors, it is evident that only one need be used, as the rails may be used as the return-conductor.

The truck or vehicle proper may be made in any of the well-known ways. That shown consists of the frame B′, provided with the usual side guides B^2 for the axle-boxes *b*, in which the axles D are journaled. *d* are the car-wheels. Resting upon the axle-boxes B^2 are the usual equalizing-bars B^3, between which and the frame B′ are arranged the springs *b*′, which in the construction shown are the only spring devices used between the truck-frame and axles.

It is to be understood that I do not limit myself in any sense to the form of truck, as that is immaterial to my invention. A truck, as here shown, might be applied to each end of a car-body, or the frame B′ may be considered as the vehicle-frame and as a complete vehicle if the box or body were built upon it like an ordinary street-car.

The electric motors are shown in dotted lines in Fig. 1 and may be applied in any suitable manner, that shown being as set out in my application, Serial No. 217,346, of which this is a division, or in my Patent No. 441,565, of November 25, 1890. From this it will be seen that the motors E are hinged to the axle, to which they are geared, and are flexibly supported at their free ends by springs J. The gearing G H connects the motor-shaft with the axle D. Any suitable manner of applying the motor or motors may be employed for that shown. As shown, there are two positive and two negative collector-wheels and arms, and the arms of like polarity are pivoted or hinged to the same plate K^2 and may be caused to move their free ends in the same direction by springs *k*, the tension of which may be regulated by nuts *k*′. Referring to Fig. 2, it will be observed that these arms K′ are made like bell-cranks and the short arms are connected by the springs *k*. While two pairs of collector-wheels are preferable, yet only one pair need be used, particularly if the car has two trucks, as then we would have two positive and two negative collectors widely separated to span breaks or divisions and keep a continuous current in the motor-circuits.

The collector-wheels are made with flanges forming an annular groove and run in contact with the conductors, preferably making a rolling contact upon the face of the wheel and a sliding contact upon the flange thereof, thereby greatly increasing the electrical contact. The weight of the wheel and its arm causes the collector to remain upon the conductor, the hinge connection at K^2 being such as to allow sufficient rise and fall, and the spring *k* causes the flange of the wheel to be pressed against the vertical leg of the angle-iron conductor, insuring good contact and also causing the collector-wheel to follow all lateral irregularities in the conductor.

Referring to Fig. 4, K is the collector-wheel, and is shown as being formed of two parts clamped together and having a removable wearing ring. O and O′ are the two parts of the wheel and may be formed of cast or stamped metal, but preferably of bronze or gun-metal. The part O has a flange and the part O′ has an offset or shoulder *o*. P is a copper or bronze wearing contact-ring, and is preferably made flanged, as at *p*, and is clamped between the parts O and O′, or, more specifically, between the flange of part O and shoulder *o* of part O′. The flange of the part O supports the flange *p* of the wearing ring, allowing it to be worn down to an extremely thin layer before replacing. The ring P should fit the part O′ snugly, or to prevent loose play the parts may be fitted by a slight taper, as is customary in making closely-fitting joints. The parts O O′ are clamped together by parts *n n*′ n^2, forming the hub and removable bearing N′ for the stud N of the collector-arm K′. The part *n* carries the bearing proper. Hence there is no tendency to unclamp the parts O O′ by rotation of the wheel. N^2 are nuts to hold the wheel upon the stud. I do not limit myself to the details of construction of this collector-wheel, as the essential features of invention are a removable contact wearing rim and a removable journal. The contact-wheel is thus formed with two flanges, forming an annular groove, crotch, or depression in which the conductor rests while it is moving along. This contact-wheel is free to rise and fall, as well as move laterally, and with it the free end of the collector-arm, to follow all irregularities in the conductor.

In conclusion I would remark that while I prefer the general construction herein set out it is evident that it may be varied in many ways. For instance, the working conductors need not be angle-iron, but might be of any other cross-section. In any construction it is advisable that the means for securing the conductor to its support be arranged as not to come in contact with the collector-wheel. It is also immaterial as to the specific means for attaching the collector or contact wheels to the vehicle.

Having now described my invention, what I claim as new, and desire to secure by Letters Patent, is--

1. In an electric railway an electrically-propelling vehicle having a frame supported upon the axles or axle-boxes independently of the springs supporting the car-body in combination with a horizontally-movable collector-arm hinged thereto, a collector-wheel journaled upon the free end of said arm, and a working conductor upon which said collector-wheel runs.

2. In an electric railway an electrically-propelled vehicle having a frame supported upon the axles or axle-boxes independently of the springs supporting the car-body in combination with a horizontally-movable collector-arm hinged thereto, a collector-wheel journaled upon the free end of said arm a spring

to press said collector-wheel laterally against the conductor, and a working conductor upon which said collector-wheel runs.

3. In an electric railway, an electrically-propelled vehicle having a frame supported upon the axles or axle-boxes independently of the springs supporting the car-body in combination with a horizontally-movable collector-arm hinged thereto, a flanged collector-wheel journaled upon the free end of said arm, a spring to press said collector-wheel laterally against the conductor, a longitudinal stringer of wood, and a working conductor of angle-iron secured to said stringer upon which said collector-wheel runs.

4. In an electrical railway, the combination of a longitudinal insulating-stringer arranged parallel to the track, an angle-iron secured upon the upper edge thereof to form the working conductor, an electrically-propelled vehicle, two horizontally-movable arms hinged to the vehicle and pointing in opposite directions, flanged collector-wheels journaled upon the free ends of said arms and adapted to run upon the angle-iron conductor, and a suitable spring device to press said collector-wheels laterally upon the conductor.

5. In an electric railway, the combination of an electric conductor arranged parallel to the track, an electrically-propelled vehicle having a frame carried by the axles independent of the springs supporting the car-body and having a transverse portion extending between and parallel to the axles, an electric motor to propel the car, a current-collector consisting of a rearwardly-extending arm hinged at one end to the transverse portion of the independent frame and having a roller-contact at the other or free end making a traveling contact with the conductor, and an electric circuit on the car between the collector and motor.

6. In an electric railway, the combination of the rails, with two longitudinal stringers of insulating material arranged parallel to the rails and between them, and working conductors formed of angle-irons secured upon the adjacent upper edges of the stringers.

7. In an electric railway, the combination of the rails, with two longitudinal stringers of insulating material arranged parallel to the rails and between them and close to the rails to form guards to prevent the cars jumping the track, and working conductors formed of angle-irons secured upon the adjacent upper edges of the stringers or those edges farthest from the rails.

8. The combination of a railway, an electric conductor extending along the railway, a traveling vehicle, a laterally-movable arm connected to the vehicle, and a collector-wheel journaled on the arm and consisting of a metallic frame having a removable annular contact-rim.

9. The combination of a railway, an electric conductor extending along the railway, a traveling vehicle, a laterally-movable arm connected to the vehicle, a collector-wheel journaled on the arm and consisting of a metallic frame having a removable annular contact-rim, and clamping devices to clamp the contact-rim to the frame.

10. The combination of a railway, an electric conductor extending along the railway, a traveling vehicle, a laterally-movable arm connected to the vehicle, and a collector-wheel journaled on the arm and consisting of a metallic frame having a removable annular contact-rim, and a central clamping device to clamp the frame and rim together.

11. A collector-wheel for electric railways, consisting of a wheel-frame formed of two parts, a clamping-hub to secure said parts together, and a removable wearing contact-rim clamped in place between said frame parts in combination with a vehicle provided with an electric motor, an arm supporting the collector-wheel, a conductor from the wheel to the motor, and a line conductor against which the collector-wheel travels.

12. A collector-wheel for electric railways consisting of a wheel-frame made of two parts, a removable wearing contact-rim clamped between said wheel parts, a clamping-hub to secure said wheel parts together, in combination with a vehicle provided with an electric motor, an arm supporting the collector-wheel, a conductor from the wheel to the motor, and a line conductor against which the collector-wheel travels.

13. In a collector-wheel for an electric railway, the combination of the disk O, the flanged disk O′ having an offset or shoulder *o*, the flanged annular contact-rim P, and the clamping-hub parts *n n′*.

14. In an electric railway, the combination of the rails, longitudinal stringers of wood arranged adjacent to and independent of the rails, electric conductors secured to the stringers at a higher elevation than the rails, a traveling vehicle, an electric motor to propel the vehicle and rearwardly-extending current-collecting devices carried by the axles independently of the springs supporting the car-body and moving with the vehicle and making a traveling contact with the conductors.

15. In a current-collector having a transverse journal the combination of the parts O O′, wearing flanged rim P, and a clamping-hub to clamp said parts O O′ together.

16. In an electric railway, the combination of a conductor extending along the railway, a traveling vehicle, an electric motor to propel the vehicle, a trailing contact having two faces arranged at an angle to each other one of which makes a rolling contact with the conductor and the other of which makes a sliding contact with the conductor, and a spring to press the face of the collector against the conductor to insure the pressure of the sliding contact.

17. In an electric railway, the combination of a conductor extending along the railway, a traveling vehicle, an electric motor to propel

the vehicle, a contact device having two faces arranged at an angle to each other one of which is adapted to make a rolling contact with the conductor and the other a sliding contact therewith, a rigid arm jointed at one end to the vehicle and movable upon a vertical axis and carrying the contact device at its free end, and a spring acting upon the arm to press the contact device against the conductor.

18. In an electric railway, the combination of a conductor extending along the railway having horizontal and vertical faces, a traveling vehicle, an electric motor to propel the vehicle, a contact device having two faces arranged at an angle to each other one of which is adapted to make a rolling contact with the conductor and the other a sliding contact therewith, a rigid arm jointed at one end to the vehicle with provision for lateral motion and carrying the contact device at its free end, and a spring acting upon the arm to press the contact device laterally against the vertical-face conductor.

19. In an electric railway, the combination of a working conductor having a horizontal and a vertical face, a traveling electrically-propelled vehicle, a collector-wheel having a contact-flange carried by said vehicle and making contact with both faces of the conductor, and means to press the flange against one of the faces to create a surface contact.

20. In an electric railway the combination of a working conductor having a horizontal and a vertical face, a traveling electrically-propelled vehicle, a collector-wheel having a removable contact-flange, carried by said vehicle and making contact with one of the conductor-faces and a spring to press said contact-flange against the vertical face.

21. In an electric railway, the combination of a support of insulating material arranged along the railway, a conductor having a laterally-exposed contact-face, means for securing the conductor to the insulating-support arranged at a lower elevation than the contact-surface of said conductor, a traveling vehicle, and a laterally-movable contact supported by the conductor and pressed against the lateral face of the conductor by a spring.

22. In an electric railway, the combination of a support of insulating material arranged along the railway, a conductor having a laterally-exposed contact-face, means for securing the conductor to the insulating-support arranged at a lower elevation than the contact-surface of said conductor, a traveling vehicle, and a laterally-movable contact supported by the conductor and spring-pressed against the lateral face of the conductor.

23. In an electric railway a railway-track, a line-stringer of wood arranged parallel with said track, an angle-iron conductor arranged along one of the upper corners of the stringer, spikes driven in through the lower leg of the angle-iron an electric-propelled vehicle, and a flanged collector-wheel adapted to run upon said conductor, and in which the flange is less depth than the distance from the top of the angle-iron to the spikes.

24. The combination of a railway, an electric conductor extending along said railway, a traveling vehicle, an electric motor to propel the vehicle a collector-arm connected intermediate of the axles of and extending rearward from the vehicle with freedom of lateral movement, and a contact device carried by the free end of said arm making contact with the conductor.

25. The combination of a railway, two electric conductors extending along said railway, a traveling vehicle, an electric motor to propel the vehicle and two independently-movable collecting-arms movable vertically and laterally carried by the vehicle and provided with contact devices for making contact respectively with the two conductors.

26. The combination of a railway, two electric conductors extending along said railway, a traveling vehicle, an electric motor to propel the vehicle and two independently-movable collecting-arms movable vertically and laterally carried by the vehicle and provided with contact devices for making contact respectively with the two conductors, and independent springs to force said contact devices against their respective conductors.

27. The combination of a railway, two electric conductors extending along said railway, a traveling vehicle, an electric motor to propel the vehicle and two independently-movable collecting-arms movable vertically and laterally carried by the vehicle on vertical axes and provided with grooved contact devices for making contact respectively with the two conductors.

28. The combination of a railway, two electric conductors extending along said railway, a traveling vehicle, an electric motor to propel the vehicle and two independently-movable collecting-arms movable vertically and laterally carried by the vehicle with freedom of both vertical and horizontal movement and provided with contact devices for making contact respectively with the two conductors.

29. The combination of a railway, two electric conductors arranged in substantially the same horizontal plane, a traveling vehicle, an electric motor to propel the vehicle and two collecting-arms movably connected at one end to the vehicle, axles independently of the vehicle-body and having the other ends free to move transversely to the conductors and each provided with a grooved collecting device moving in contact with the respective conductors.

30. The combination of a railway, two electric conductors arranged in substantially the same horizontal plane, a traveling vehicle, an electric motor to propel the vehicle two rearwardly-extending and substantially parallel collecting-arms movably connected at one end to the vehicle, axles independently of the vehicle-body and having the other ends free to move independently transversely to

the conductors, and each provided with a collecting device moving in contact with the respective conductors, and means to force said contact devices against their respective conductors.

31. The combination of a railway, an electric conductor extending along said railway, a traveling vehicle, an electric motor to propel the vehicle a long collector-arm connected at one end to one place on the vehicle on a transverse axis, and having an angular end constituting a short arm close to the pivot-point, a contact-wheel having an annular recess between the flanges carried by said arm at the free end, and a spring acting upon the short arm close to the transverse axis to force said contact-wheel against the conductor.

32. The combination of a railway, an electric conductor extending along the railway, a traveling vehicle having its body part supported on the axles by means of springs, an electric motor to propel the vehicle a long collector-arm carried by the axles independently of the vehicle-body and having one end free to swing vertically laterally and obliquely to the conductor, and a contact device carried by said free end of the collector-arm moving in contact with the conductor.

33. The combination of a railway, an electric conductor extending along the railway, a traveling vehicle having its body part supported on the axles by means of springs, an electric motor to propel the vehicle a long collector-arm carried by the axles independently of the vehicle-body and having one end free to swing vertically laterally and obliquely to the conductor, and a contact device carried by said free end of the collector-arm moving in contact with the conductor, and means to force the contact device against the conductor.

34. The combination of a railway, an electric conductor extending along the railway, a traveling vehicle having its body part supported on the axles by means of springs, an electric motor to propel the vehicle a long collector-arm carried by the axles independently of the vehicle-body and hinged on an axis transverse to the conductor and also having one end free to swing laterally and transversely to the conductor, and a contact device consisting of a wheel having an annular recess and flanges carried by said free end of the collector-arm moving in contact with the conductor, and means to force said contact-wheel against the conductor, which is received in its groove.

35. The combination of a railway, an electric conductor extending along the same, a traveling vehicle, an electric motor to propel the vehicle having its body supported on the axles by springs, a long collector-arm extending rearwardly and loosely connected at one end to the vehicle and supported by the axles independently of the vehicle-body with freedom of lateral movement at its other end, and a contact-wheel journaled on the free end of said arm on a transverse axis for making contact with the conductor.

36. The combination of a railway, an electric conductor arranged parallel to the railway, a traveling vehicle, an electric motor to propel the vehicle and a collector-arm pivoted to the vehicle with freedom of vertical and lateral movement and provided with a contact device making a traveling contact with the conductor, a spring to force the contact device toward the conductor, and means to adjust the tension of the spring.

37. The combination of a railway, an electric conductor extending along the railway, a traveling vehicle, an electric motor to propel the vehicle a bell-crank lever collector-arm having a long and short arm loosely pivoted or hinged to the vehicle so as to have vertical and lateral movement and carrying at the free end of its long arm a contact device making contact with the conductor, and a spring acting on its other or short arm to force the contact device against the conductor.

38. The combination of a railway, an electric conductor extending along the railway, a traveling vehicle, an electric motor to propel the vehicle a bell-crank lever collector-arm loosely pivoted or hinged so as to have both vertical and lateral movement to the vehicle and carrying at the free end of one of its arms a contact device consisting of a wheel having flanges between which the conductor is received, and a spring acting on its other arm to force the contact device against the conductor.

39. The combination of a railway, an electric conductor extending along the railway, a traveling vehicle, an electric motor to propel the vehicle a rearwardly-extending lever collecting-arm loosely pivoted or hinged to the vehicle so as to be capable of having lateral vertical and oblique motion and carrying at the free end of one of its arms a grooved contact device making contact with the conductor, and a spring having one end fixed relatively to the lever and the other end acting on its other arm to force the contact device against the conductor.

In testimony of which invention I hereunto set my hand.

RUDOLPH M. HUNTER.

Witnesses:
E. M. BRECKINREED,
HARRY G. CLARK.