E. J. BUSHEY.

AIR MOISTENER.

APPLICATION FILED MAR. 20, 1915.

1,312,948. Patented Aug. 12, 1919.

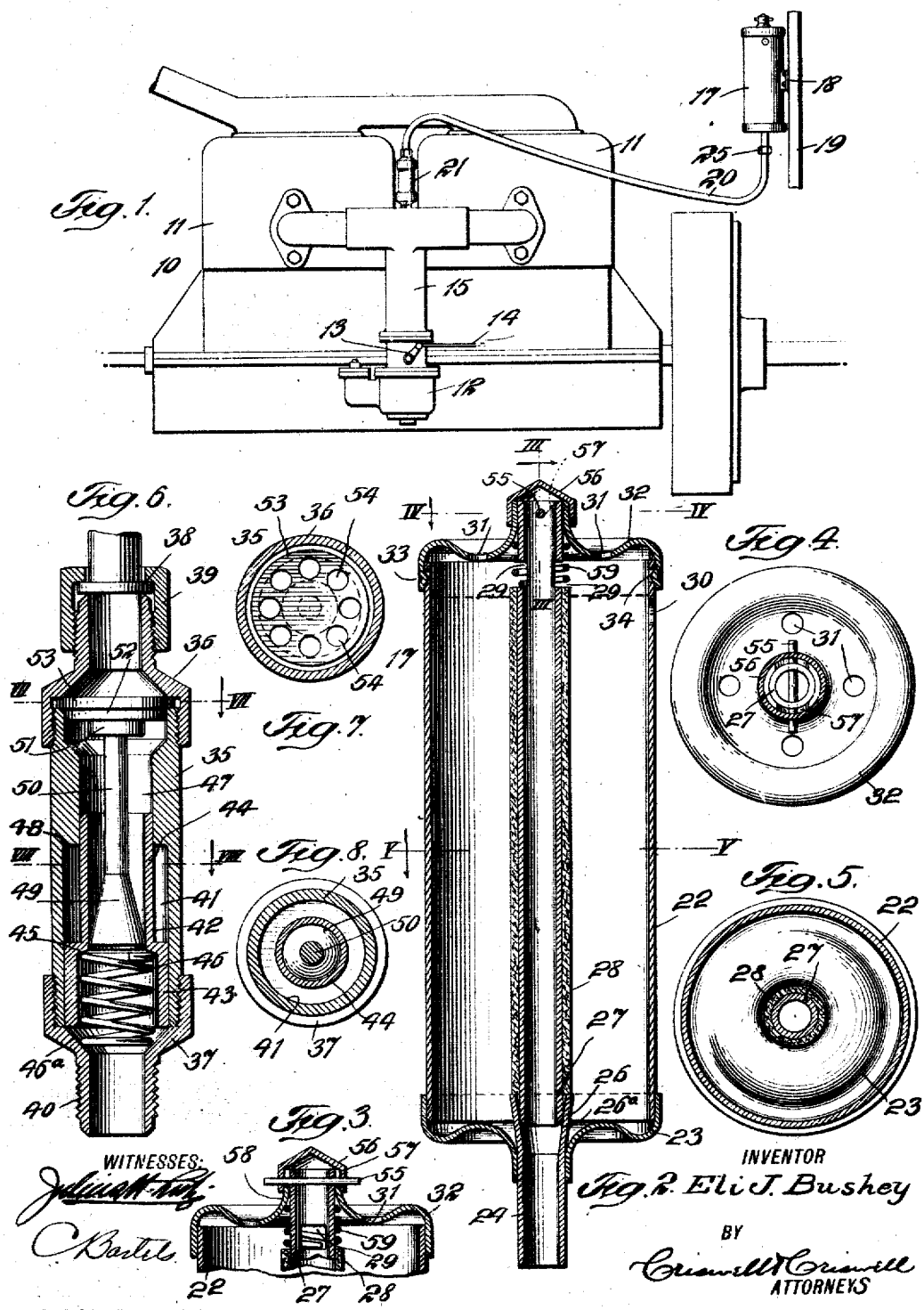

WITNESSES:

C. Bartels

INVENTOR

Eli J. Bushey

BY

Criswell & Criswell

ATTORNEYS

UNITED STATES PATENT OFFICE.

ELI J. BUSHEY, OF NEW YORK, N. Y.

AIR-MOISTENER.

1,312,948. Specification of Letters Patent. Patented Aug. 12, 1919.

Application filed March 20, 1915. Serial No. 15,810.

To all whom it may concern:

Be it known that I, ELI J. BUSHEY, a citizen of the United States, and a resident of New York, county and State of New York, have invented certain new and useful Improvements in Air-Moisteners, of which the following is a full, clear, and exact description.

This invention relates more particularly to the means for saving gas and for cleaning the cylinders of gasolene explosive engines of carbon.

The primary object of the invention is to provide a simple and efficient means which may be readily applied to gasolene engines of automobiles or other vehicles without changing the construction of the same, and by which a mixture of air and water vapor may be combined with the explosive mixture between the carbureter and the cylinder or cylinders of the engine thereby economizing in the use of gasolene and at the same time increasing the speed and causing the carbon deposit in the engine cylinders to be automatically removed.

A further object of the invention is to provide an attachment or apparatus which is inexpensive to manufacture and which may be readily made and assembled and applied to various kinds of engines as ordinarily constructed.

With these and other objects in view, the invention will be hereinafter more particularly described with reference to the accompanying drawings, which form a part of this specification, and will then be pointed out in the claims at the end of the description.

In the drawings, Figure 1 is a side elevation of one form of automobile engine with the invention applied thereto.

Fig. 2 is an enlarged vertical section of the supply tank of the apparatus.

Fig. 3 is a fragmentary vertical section, taken on the line III—III of Fig. 2.

Fig. 4 is a sectional plan view taken on the line IV—IV of Fig. 2.

Fig. 5 is a sectional plan taken on the line V—V of Fig. 2.

Fig. 6 is an enlarged vertical section, partly in elevation, of the automatic vacuum controller or valve.

Fig. 7 is a sectional plan view taken on the line VII—VII of Fig. 6; and

Fig. 8 is a sectional plan view taken on the line VIII—VIII of Fig. 6.

The engine 10 has one or more cylinders 11 and is provided with the usual carbureter 12 having a throttle which may be operated by a crank 13, the latter being operated by a rod 14. Above the carbureter is an intake or manifold 15 which is connected to the cylinders. The parts thus described may be of the usual or of any preferred construction.

A tank 17 may be attached to any convenient place on the automobile and is here shown as being secured by brackets 18 to the dashboard 19. This tank is connected by a pipe 20 to an automatic controller or controlling valve 21, which latter is held to the manifold 15 to control the supply of air and vapor to mix with the explosive mixture from the carbureter as will be presently described. The tank 17 comprises a cylindrical casing or body 22 of any suitable material and of any desired size to the lower end of which is held a bottom or cap 23. A tube 24 connects by a coupling 25 or otherwise to the pipe 20 and said tube 24 extends up through the bottom of the cap 23 and is flared at its upper end, as at 26, to form a seat for the end 26ª of a tube pipe or member 27. The pipe 27 is provided with a covering or casing 28 of blotting paper or other liquid absorbing material and at the upper end thereof said pipe is cut away, as at 29, to provide inlet ports for said pipe, said absorbent material being in the form of a tube and resting at its lower end on the upper edge of the flared end 26 of the tube 24 and at its upper end being flush with the lower lips of the ports 29 and serving by capillary attraction to carry the water to the upper edge of the absorbent material. The tank is adapted to be filled with water to a certain height somewhat below the upper edge of the tube 28 and is provided with an overflow opening 30 which regulates the height of the water, said opening being also utilized if desired to fill the tank with water. The water absorbed by the cover or tube 28 is carried to the openings 29 in the tube or member 27 and is picked up by air entering openings 31 in cap 32 of the tank and opening 30 in tank body and passes into and downwardly through the pipe 27, said openings 31 being used if desired for filling the tank with water instead of opening 30. The vacuum created by the engine or motor in the pipe 27 draws air through the openings 30 and 31 into the upper part of the tank through the ports 29 and being forced

to make a sharp bend over the lower lips of the ports 29 the air will by friction pick up the water vapor from the upper edge of the absorbent material and the moist air will pass into the pipe 27 through said pipe to the pipe or connection 20 and to the automatic valve 21. The cap 32 may have teats or depressed parts 33 which are adapted to enter openings 34 in the cylindrical body 22 of the tank and by which said cap is adapted to be detachably held to said body.

The automatic controller or valve 21 comprises a casing 35 the upper and lower ends of which are threaded and to the threaded portion at the upper end is held a nipple or member 36 and to the threaded lower end a similar nipple or member 37. The pipe 20 may be provided with a flange, as at 38, and may be held in sealing contact with the upper end of the nipple 36 by means of a coupling or nut 39 or otherwise, the nipple 37 of said valve or controller being threaded at one end, as 40, and directly engaging a threaded opening in the manifold 15 to adapt any air or moisture passing through said controller or valve to unite with the explosive mixture from the carbureter and to pass with said explosive mixture to the engine cylinder or cylinders. The casing or body 35 has an enlarged chamber 41 at the lower portion thereof and adapted to move in said chamber is a tubular valve member or piston 42. This valve member 42 has an enlarged portion 43 and a reduced cylindrical portion 44. The enlarged portion 43 provides a shoulder 45 against which one end of a spring 46 is adapted to be seated, the other end of said spring resting against a tapered portion 46^a of the nipple 37 and tending normally to force the valve member 42 upwardly. The reduced portion 44 of the valve member 42 is guided at its upper end in the opening 47 and at the bottom of said opening is a shoulder 48. A metering valve or head 49 is held to a stem or pin 50. The valve 49 tapers upwardly, so that at the point where it joins the stem 50 it is much smaller than the lower portion of said valve. The stem and valve are held stationary within the casing and the valve member or piston 42 is adapted to move relatively thereto. The metering valve stem 50 is provided with an enlarged portion 51 and with collar or disk-like parts 52 and 53. The disk-like part 53 is provided with openings 54 of any desired number and size, said openings also passing through the disk portion 52. The flange or disk-like portion 53 is held between a part of the nipple or member 36 and the upper end of the casing or body 35, while the disk or member 52 fits neatly within the upper end of said member 35, the latter being enlarged at this point so as to properly centralize the valve 49 within the body 35, it being understood that between the various joints where desired, packing may be employed to further assist in making the parts tight.

During the normal action of the tank or receptacle 22 the controller or valve 21 among other things regulates the volume of vapor delivered to the motor in an entirely automatic manner. The nipple 40 being screwed into the intake manifold above the throttle it will be apparent that when the throttle is closed with the motor running, the vacuum in the manifold is at its highest. This vacuum acts against the projected area of the lower end of the piston or valve member 43 and pulls it down against the force of the spring 45 and in doing so causes the small part of the member 43 to telescope or move along the conical end 49 of the metering pin or stem 50 thereby shutting off the vapor to the motor. As the throttle of the motor is opened, the vacuum in the manifold decreases and therefore the spring 45 forces the piston or member 43 to rise thereby admitting vapor and air to the motor in volumes proportionate to the vacuum in the intake manifold. It should be borne in mind that the controller 21 is always fed nothing but water vapor and air by the tank 22 during the normal operation of the invention and that this vapor in passing through the holes 54 in the metering pin 50 is broken up still finer due to the high velocity of the vapor through the numerous small diameter holes; and finally just before entering the motor the vapor is broken up once more in passing between the edge of the conical end of metering pin 50 and the edge of the counterbore of the piston or valve member 43, the shape of the opening between the metering pin and the piston being always similar to a venturi which in itself is an excellent means for vaporization purposes. The vaporization or atomizing of the water is thus done entirely mechanically and is fed in this state into the manifold.

It is apparent that the vapor is broken up three times before it gets into the motor thereby reducing the possibility of condensation *en route* to the cylinders; that the volume of vapor delivered to the motor is governed entirely by the engine itself; and that when the motor is stopped, the piston or valve member 43 is forced upward by the spring 45 until the small part 44 thereof telescopes over the shoulder 51 of the metering pin 50, and the downward action of the piston is checked by the dash pot formed by the chamber 41, there being an escape for any air or gas in the chamber 41 about the part 44 or by a vent through the casing 35. Therefore when you crank the motor on a throttle which must always be almost closed you are not admitting false air which

would make starting not only difficult but in some cases impossible, it being evident that the valve member or piston 43 shuts off the vapor and air in both extreme positions and automatically. It is also apparent that the tank and valve coöperate with each other and that the process of atomizing or vaporizing is not complete until the vapor passes through the controller or valve 43.

In case it is desired to clean the engine cylinders thoroughly should they become dirty through deposits of carbon, etc., and when first attaching the invention to the engine already in use, the invention may be arranged to have a scavenging effect. To secure this result means is provided whereby a much larger quantity of the water or vapor may be caused to pass to the engine cylinders. The pipe 27 at its upper end is provided with a transversely extending pin or rod 55 which also passes through a cap 56 forming a closure for the upper end of the pipe 27. The pin 55 normally rests in the bottom of a V-shaped groove 57 formed in the upper edge of the reduced part 58 of the cap 32. If the cap 56 with the pin 55 is given a rotary movement, the pin will ride up the side of the V-shaped groove 57 and this will raise the tube 27 and cover 28 so that water within the tank will pass directly into the flared portion 26 of the pipe or tube 24. A spring 59 is located about the tube 27 and tends normally to keep the lower end thereof seated against the flared part 26, said spring having one end resting against the under surface of the cap 27 and its lower end against the edge of the cut-away part forming the openings 29 for the passage of the vapor in said tube and serving also to keep the absorbing tube 28 from creeping upwardly and partly or wholly covering the ports 29. The water passes to the controller valve 21 and in its passage therethrough will be broken up first by the holes 54 in the metering pin 50 and is then converted into a spray in passing between the sharp edge of the conical part 45 and lower edge of small part 44 of the valve member or piston 42. After the water is converted into a spray it is caused to pass into the gasolene mixture in the manifold 15 and from there into the cylinder where it is converted into steam. By this means the engine may be run very rapidly and the steam created by the moisture will tend to loosen the carbon deposit, which latter will in turn be thrown out with the exhaust gases.

It will be understood that instead of the pipe 20 with the mixture of vapor and air passing to the controlling valve 21 to mix with the explosive mixture from the carbureter without preheating the said mixture from the tank may be heated at any desired point so that the mixture may be in the form of steam before it reaches the engine cylinders.

Having thus described my invention, I claim as new and desire to secure by Letters Patent:—

1. In an apparatus of the character described, a tank comprising a body adapted to hold water, caps located at opposite ends of said cylindrical body, a tube having a flared portion providing a seat, a pipe adapted normally to be seated in said flared portion, an elongated absorbent covering fitting about the pipe, said pipe having inlet means above said absorbent covering, the lower edge of said inlet means being flush with the upper edge of the absorbent covering, means whereby air may be supplied to the tank to adapt a mixture of vapor and air to pass into said pipe, and means normally keeping the pipe seated in the flared portion of the tube.

2. In apparatus of the character described, a tank having a body, a connection at the lower portion thereof forming a seat, a pipe having a covering thereabout of absorbent material, a spring normally forcing the pipe downward to its seat, a cap forming a closure for the tank and having a reduced portion and having openings for the entrance of air from the atmosphere to the interior of said tank, said cap having a cam portion thereon, a second smaller cap, and a pin passing through the pipe and said second cap to hold the two together and adapted when the cap is rotated to ride upon the cam portion of the tank cap to elevate the pipe to permit the water within the tank to pass freely into the connection leading therefrom.

3. In apparatus of the character described, a tank having a body, a connection at the lower portion thereof forming a seat, a pipe having a covering thereabout of absorbent material and adapted to engage said seat, a cap forming a closure for the tank and having openings for the entrance of air from the atmosphere to the interior of said tank, and rotary means to elevate the pipe to permit water within the tank to pass freely into the connection leading therefrom.

This specification signed and witnessed this 17th day of March A. D. 1915.

ELI J. BUSHEY.

Witnesses:
MYLTON L. MELTZER,
MAX YORSTEIN.