Dec. 23, 1958 F. G. SAPPER ET AL 2,866,172

ELECTRICAL CONNECTOR

Filed Oct. 11, 1955

Fig. 1.

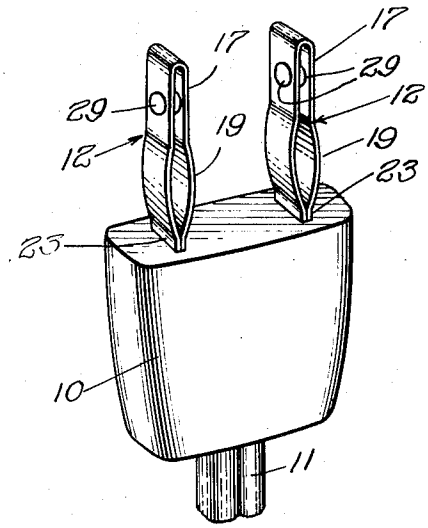

Fig. 2.

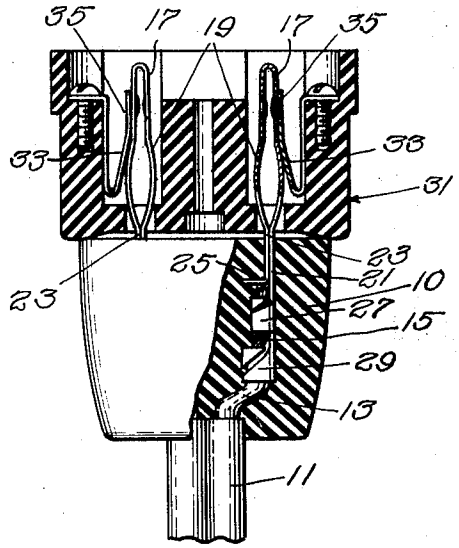

Fig. 3.

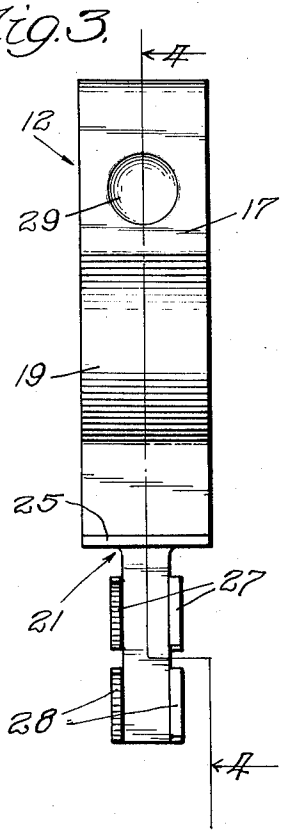

Fig. 4.

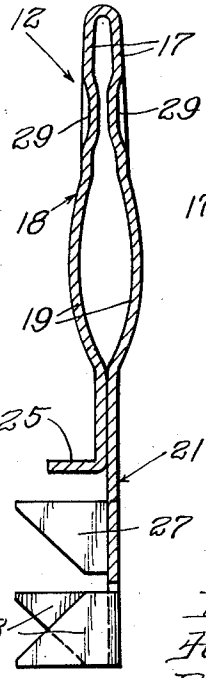

Fig. 5.

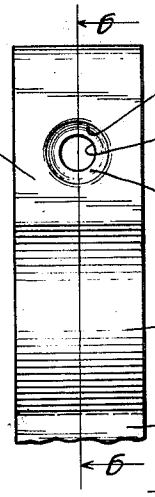

Fig. 6.

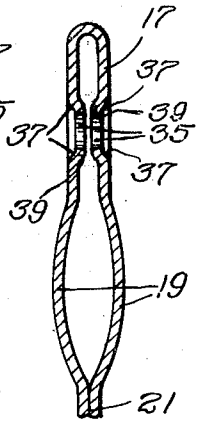

Inventors:
Frank G. Sapper,
Hugo H. Wermine,
By Soans, Glaister, Anderson
Attys.

United States Patent Office

2,866,172

Patented Dec. 23, 1958

1

2,866,172

ELECTRICAL CONNECTOR

Frank G. Sapper, Maywood, and Hugo H. Wermine, Wheaton, Ill., assignors to Belden Manufacturing Company, Chicago, Ill., a corporation of Illinois

Application October 11, 1955, Serial No. 539,761

2 Claims. (Cl. 339—195)

Our invention relates to electrical connector plugs of the type used for connecting appliance and other electrical conductor cords to wall receptacles and similar sources of electrical power. Electrical connectors of this general type are disclosed in the United States patents to Wermine, Nos. 2,439,767 and 2,671,205, which are owned by the assignee of the present invention. The invention has particular relation to the blade terminals which constitute a part of these devices.

The obtaining of good electrical contact between the blade terminals of connector plugs and the cooperating contacts of receptacles and other power outlets has for many years presented a very considerable problem to the industry. Originally, most connector plug terminals consisted of a flat, rigid, blade-like member of conducting material of suitable sandardized dimensions for engaging the resilient contacts provided in the receptacles. These operated satisfactorily when used with well designed receptacles, especially when the receptacles were new. There are, however, large numbers of quite old receptacles in use, and many of these, because of wear or design, do not provide satisfactory electrical contact with the ordinary rigid blade. To overcome this difficulty, various types of spring action blades have been designed and have been used, some quite successfully. The two-ply spring blades disclosed in the aforementioned patents constitute one particularly satisfactory type of spring action blade, but even with this type blade, some difficulties have been experienced.

There is considerable variation in the dimensions of receptacles and other outlet fittings, and when a connector plug having two-ply blades is used without proper care, or when a receptacle of inferior type or quality is encountered, damage to the blade terminals may occur. Particularly, the plies of the blade are sometimes forced together or bent out of shape with the result that the spring action contact feature is impaired, or at least is not realized to its full extent.

The principal object of the present invention, therefore, is to provide an improved two-ply contact blade for a plug connector of the class described, which is more rugged and foolproof than two-ply contact blades heretofore in use, which will remain serviceable and provide an efficient electrical connection, notwithstanding the abuse to which the plug may be subjected and notwithstanding improper design or quality of the receptacles with which it is used, and which can be inserted, and withdrawn from, virtually any type of receptacle now in use or on the market without injury to the connector or to the receptacle.

In the drawing accompanying this application,

Figure 1 is a perspective view of a plug connector provided with spring blades in accordance with our invention;

Figure 2 is an elevational view, partly in section, showing the internal construction of the plug connector of Figure 1, and the manner in which two-ply connector

2

blades in accordance with the invention coact with one type of receptacle or outlet;

Figure 3 is an enlarged elevational or side view of a spring blade in accordance with the invention;

Figure 4 is a sectional view taken on the line 4—4 of Figure 3;

Figure 5 is a fragmentary side elevational view of a second type of spring blade in accordance with the invention; and

Figure 6 is a sectional view taken on the line 6—6 of Figure 5.

We have illustrated our invention as being applied to a molded-on type plug connector in which the electrical connections between the contact blades and the conductors of the cord or cable are made prior to the molding operation. In the manufacture of plug connectors of this type, after the electrical connections are made, the parts are placed in a suitable die and the plug body is then molded about the end of the cord conductor and the shank portions of the contact blades, as shown in Figure 1. However, it will be understood that the use of our improved contact blade is not limited to plug connectors of the molded-on type; it can be used in a plug connector body of the type illustrated in Patent No. 2,439,767, heretofore referred to, and with other connectors.

In the drawings, **10** represents the plug body which is made of molded insulating material such as a rubber or other suitable plastic material, for example, one of the vinyl molding compounds. As above noted, the plug body is molded about the assembled parts which include end portions **13** of the conductor cord **11** and the pair of blade members **12**, which are respectively connected to bared ends **15** of the cord conductors.

As previously stated, the present invention is concerned primarily with the construction of the terminal contacts or blade members **12**. In this connection, it may be noted that certain standard specifications for terminal contacts or blades have existed in the industry for many years. These specifications, which have been promulgated by the Underwriters' Laboratory, under the sponsorship of the National Board of Fire Underwriters, define standard dimensions for the blade elements, and the allowable manufacturing tolerances. It is by this and similar specifications for the receptacles and other apparatus that electrical cord connectors are substantially interchangeable.

The improved spring blade of the present invention, as illustrated at **12**, constitutes a two-ply, transversely resilient blade which in its physical dimensions, accurately conforms to the dimension requirements of the Underwriters' Laboratory. The blade is manufactured by folding over and shaping a strip of suitable spring material of standard prong width (.25") so as to provide two, longitudinally-spaced, transversely resilient contact portions and a shank or support portion which constitutes an extension of the contact portions, and which is adapted to be molded into the plug body. In the embodiment illustrated in Figures 1–4, the two contact portions are illustrated at **17** and **19**, and the shank portion at **21**.

The outer-most contact portion **17** comprises coextensive, substantially parallel or slightly tapered sections of the strip, which are spaced apart a short distance, desirably a distance approximately equal to the blade thickness, normally about .015–.025". The outermost contact portion has a length which is desirably about one-half of the length of the blade, i. e. from about .30–.375". For convenience in inserting the blades into the receptacles with which they are to be used, a slight taper of the order of from about 2°–5° has been successfully utilized between the two half sections constituting the outermost contact portion. The taper provides minimum blade

thickness at the outer extremities of the blade, and the term "substantially parallel" as used herein is thus intended to include constructions which may be slightly tapering, or which are truly parallel. The inner contact portion **19** has a length approxiately equal to the length of the outer contact portion, and comprises symmetrical, outwardly bowed, arcuate sections of the strip, the radius of the defining surface in one satisfactory embodiment of the invention being approximately .5".

The strip material from which the blades are manufactured is preferably spring brass or Phosphor bronze, and tests indicate that it should have a thickness within the limits of approximately .015–.30". The two halves of the strip are bent back upon each other along a smooth radius, and in the blade structure illustrated at **12**, the two halves of the blade are symmetrically disposed with reference to the longitudinal axis of the blade. The relative dimensions of the two contact portions **17** and **19** and the positioning of the bowed contact portion **19** relative to the plug body is desirably such that when the plug is in use, the inner or shank end of the bowed contact portion **19** will be spaced outwardly from the face of the plug body a short distance. This provides a spring portion **23** intermediate the two contact portions and the plug body.

One of the two parallel sections constituting the shank portion **21** of the blade **12** terminates in a short limb **25** which extends at right angles to the longitudinal axis of the blade. The limb **25** serves the double function of providing a stop for the end of the conductor which is attached to the blade, and of anchoring the blade in the plug body. The two parallel sections of the shank portion are in contact with each other in the region between the bowed contact portion **19** and the limb **25**.

The other half section of the shank portion **21** extends below the limb **25** and is provided with two sets of opposed ears, as shown at **27** and **28**. The ears **27** are used to provide an electrical connection between the cord conductor and the blade terminals, and depending upon the type of conductor cord used, the ears **28** are used to provide an additional electrical connection to the cord conductor or a mechanical, strain relief connection. In providing the electrical connection, the ears are bent or clinched tightly about a bared end portion of the cord conductor. If the connector cord includes individually insulated conductors, as shown at **13**, in Figure 2, a strain relief connection can be provided by bending the opposed ears **28** about the conductor insulation, as shown in Figure 2. In either event, the arrangement provides an efficient mechanical and electrical connection between the blade shank and the conductor cord with which the blade is used. As a precaution, if deemed advisable, the connection may be soldered.

In order to obtain a low-resistance electrical connection between the end of the conductor and the shank portion of the contact blade, without the expense of soldering the connection, the opposed ears should be clinched over the wire as tightly as possible and in this operation the ears may be subjected to a considerable distortion. Consequently, it is desirable that the grain of the metal of which the blade is formed should extend in the direction which will best permit this bending or clinching operation when the connection is made. In other words, the grain of the stock should be perpendicular to the length of the strip. However, this means that the grain of the stock necessarily runs parallel with the line of the fold at the outer end of the blade, so that the folded end of the blade is mechanically inferior to a fold which is made crosswise of the grain.

In actual practice, in order to enable the blade elements to be made from a continuous strip by means of automatic machinery, it is found preferably to use strip stock in a continuous length and of sufficient width to permit the contact blade to extend crosswise of the stock. This suits the requirements for the connecting ears **27** and **28**, but after making the fold at the end of the blank the folded end is not as rugged as it would be if the blank had been made lengthwise of the strip stock, nor is the blade as well able to resist excessive bending or twisting forces to which the prongs of the plug may be subjected during use.

For this or other reasons, certain difficulties have been experienced in the use of two-ply blades of the described type, as above noted. Particularly, difficulty has been experienced in obtaining a completely reliable electrical connection with all types of receptacles, especially after the connector plugs have been in use for a period of time. The plug may work completely satisfactorily when carefully plugged into a high quality, modern receptacle, but in other receptacles, it may be difficult to insert or it may fail to make a low-resistance, high quality contact.

We have discovered that these difficulties can be effectively overcome by certain changes in the structure of the blade. In the first place, we so construct the blade as to enable it to resist excessive distortion as an incident to the punching, pressing and other operations required in the forming of the outer portions of the blade. Secondly, we so construct the blade as to maintain the security of the plug in the receptacle while, at the same time, making it possible to withdraw the plug from the receptacle without requiring the exercise of excessive force which might distort or damage the prongs or the receptacle contact springs.

Specifically, we have discovered that if the two folded-over half sections, which comprise the outer contact portion of the blade, are provided with opposed, inwardly projecting means, which limit but do not prevent movement of the two half sections of the blade toward each other, much longer blade life and much more satisfactory operation will result. This motion-limiting means may comprise opposed indentations, as illustrated at **29** in Figures 1 through 4, or it may comprise arrangements of the type shown in Figures 5 and 6. The indentations **29** shown in Figures 1 through 4 are of spherical or other convenient form, and are desirably of such dimensions that movement of the two half sections of the outer contact portion **17** of the blade is limited to about one-half the normal separation of those sections.

Where spherical or similarly shaped indentations are used, the two half sections of the blade engage each other with point or line contact, which contact is located intermediate the length of the outer contact portion **17**. This maintains excellent blade flexibility, which permits ease of insertion and ease of withdrawal of the plug. At the same time, it definitely limits the stressing of the outer contact portion and assures a resilient or spring action in the outer contact portion **17** throughout the operative life of the blade. The spherical or similarly shaped indentations have a further advantage in that they provide some structural strengthening of the half sections of the blade, which comprises the outer contact portion **17**.

It will be appreciated that a single indentation formed in one of the two half sections of the blade may be sufficient, and that the indentation may take other forms than the spherical section shown. Figure 2 illustrates the manner in which blades in accordance with the invention coact with a receptacle **31** of an approved type. The contact springs **33** in this receptacle are provided with detents **35** which are adapted to engage the central holes normally provided at the outer end of connector plug blade terminals. The formed indentations **29** in the outer contact portions **17** of the blades **12** coact with these detents in essentially the same manner as holes, but provide better electrical contact, and, because of the curved edge surfaces, are capable of easier insertion and withdrawal. The smooth edges of the indentations **29** also minimize the likelihood of damage to the receptacle springs **33** during insertion or withdrawal of the plug.

In Figures 5 and 6, there is shown a modified form of indentation in the outer contact portion of the blades. In this form of the invention, opposed, centrally disposed holes **35**, similar to the holes previously used in contact

blades, are provided in the two half sections which constitute the outer contact portion **17**. The rim of each of these holes is, however, indented, as shown at **37** to form an annular inner projection or indentation **39**. The indentations **39** in the two half sections of the blade are opposed and in alignment with each other, and provide a stop for limiting the movement of the two half sections of the blade toward and away from each other, similarly to the indentations **29** of the previously described structure. The working of the blade incident to the production of the indentations **39** also strengthens the two half sections of the blade which make up the outer contact portion **17**. Again, the amount of inward projection should be such that the movement of the half sections toward each other is limited to about half the normal spacing of those sections.

In both constructions, it will be noted that the indentations provide a motion-limiting stop intermediate the length of the outer contact portion. This is not only advantageous in maintaining resilience in the outer contact portion as described, but it also aids materially in maintaining the resilience of the inner contact portion.

Various of the features of the invention believed to be new are set forth in the accompanying claims.

We claim:

1. A two ply, one-piece spring blade for electrical plug connectors and the like comprising a flat metal strip folded upon itself at the outer end of said blade to provide an outer contact portion, a shank portion and an intermediate contact portion connecting the outer contact portion and the shank portion, said outer contact portion comprising a pair of resilient, co-extensive, substantially parallel sections of said strip spaced apart a short distance from each other, at least one of said sections having an inwardly extending projection spaced from said fold and extending toward the other section for preventing excessive movement of said sections towards each other, but normally spaced from said other section and from said fold so as to permit a limited amount of such movement, said inner contact portion comprising co-extensive sections of said strip which are outwardly bowed and spaced apart a substantially greater distance than the sections of said outer contact portion, whereby said sections of said inner contact portion are capable of a substantial additional movement towards each other after the aforesaid limited movement of the parallel outer sections has been arrested by reason of said projection, the shank portion including parts which are formed as extensions of said sections of the inner contact portion.

2. A two ply, one-piece spring blade for electrical plug connectors and the like comprising a flat metal strip folded upon itself at the outer end of said blade to provide an outer contact portion, a shank portion and an intermediate contact portion connecting the outer contact portion and the shank portion, said outer contact portion comprising a pair of resilient, co-extensive, substantially parallel sections of said strip spaced apart a short distance from each other, each of said sections having an inwardly extending projection spaced from said fold and opposing a corresponding projection on the other section for preventing excessive movement of said sections towards each other, said opposing projections being normally spaced apart so as to permit a limited amount of such movement, said inner contact portion comprising co-extensive sections of said strip which are outwardly bowed and spaced apart a substantially greater distance than the sections of said outer contact portion, whereby said sections of said inner contact portion are capable of a substantial additional movement towards each other after the aforesaid limited movement of the parallel outer sections has been arrested by reason of said projections, the shank portion including parts which are formed as extensions of said sections of the inner contact portion.

References Cited in the file of this patent

UNITED STATES PATENTS

2,439,767	Wermine	Apr. 13, 1948
2,476,738	Klumpp	July 19, 1949
2,511,806	Macy	June 13, 1950
2,671,205	Wermine	Mar. 2, 1954