(12) UK Patent Application (19) GB (11) 2 072 011 A

(21) Application No **8009334**
(22) Date of filing **20 Mar 1980**
(43) Application published
**30 Sep 1981**
(51) **INT CL**[3]
**A62C 3/00 3/14**
(52) Domestic classification
**A5A** 22
(56) Documents cited
**None**
(58) Field of search
**A5A**
(71) Applicants
**Kenneth Wright,**
**"Sparrow Corner",**
**9 Sandsacre Avenue,**
**Bridlington,**
**YO16 5UW,**
**Yorkshire.**
(72) Inventors
**Kenneth Wright**
(74) Agents
**Messrs. W.P. Thompson**
**& Co.,**
**Coopers Building,**
**Church Street,**
**Liverpool L1 3AB.**

(54) **Mail box**

(57) In order to reduce the possibility of a serious fire starting when burning material is put through a letter box the invention provides a mail box containing fire extinguishing means. In a particular embodiment the mail box comprises a container divided into two compartments A and B by a permeable grating 8. Fire extinguishing means in the form of a plastics bag filled with sand or gravel is supported on the grating 8 such that a fire in the compartment A causes the bag in compartment B to burst so releasing its contents and suffocating the flames.

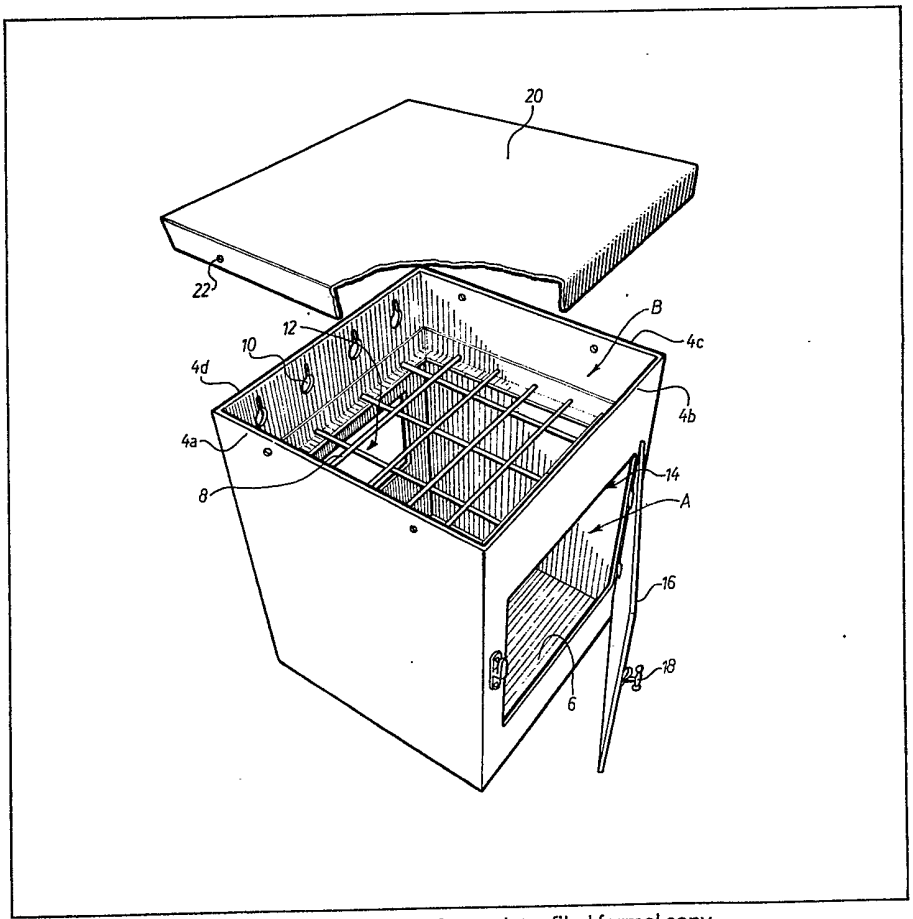


The drawing originally filed was informal and the print here reproduced is taken from a later filed formal copy.

GB 2 072 011 A

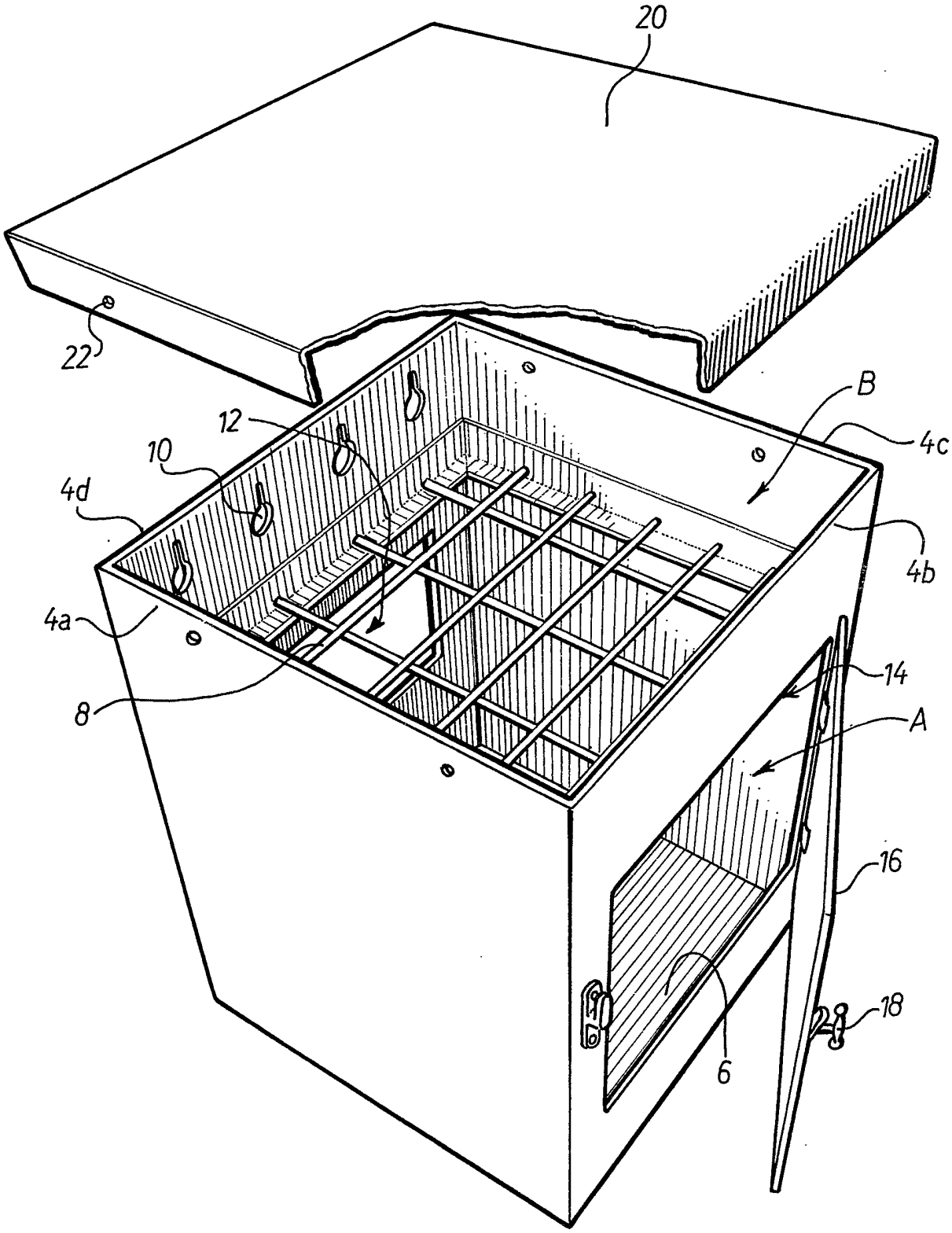
20
22
B
12
4c
10
4d
4b
4a
14
8
A
16
18
6

SPECIFICATION

**Mail box**

This invention concerns a mail box for receiving mail deposited through a mail opening.

The frequency with which fires occur as a result of arson is increasing. One popular way of starting a fire is to put a paraffin soaked rag or the like through a letter box and then set it alight or to put an already burning rag through the letter box. Paraffin or petrol may be poured through the letter box to further good effect.

The result of such action is at the least a badly burnt door, or in more serious cases a serious fire results.

An aim of the present invention is to provide a mail box which may help prevent fire damage and reduce the possibility of a serious fire starting when burning material is put through the letter box.

According to the present invention there is provided a mail box comprising a compartment having an opening for depositing mail into the compartment and an access door, and flame extinguishing means for extinguishing a fire in the compartment.

The flame extinguishing means may be a fire extinguisher, using any convenient extinguishing agent e.g. foam, triggered in dependence upon the pressure of heat or flames in the mail compartment.

According to a preferred embodiment of the invention there is provided a mail box having two compartments separated by a grating, the first compartment receiving mail deposited through a letter opening and having a mail access door, the second compartment having an access door and containing flame extinguishing means.

Conveniently the mail box is a substantially rectangular metal container which is adapted to be attached to the door or wall in which the letter box is located, a corresponding opening being provided in the first compartment for the admission of mail and a lockable mail access door being provided. The second compartment is located vertically above the first compartment and contains the flame extinguishing means. Preferably the flame extinguishing means is a polyethene bag filled with sand or gravel.

The grating serves as suspension means to suspend the flame extinguishing means vertically above any mail in the box. It will be appreciated that the grating may be replaced by any other suitable suspension means, and that the main box need not be divided into two compartments if, for example, the flame extinguishinhg means are suspended from the roof of the mail box.

The invention will now be described further by way of example only, with reference to the accompanying drawing which is perspective view of the mail box from the front and above, partially cut away for clarity.

Referring to the drawing which illustrates one embodiment of the invention a mail box generally indicated (2) comprises a substantially rectangular box having four walls 4 (*a*, *b*, *c*, *d*) and a base 6.

The box is divided into two compartments A and B by a grating 8 formed by a pluraity of metallic rods. In the illustrated embodiment a flange projects from the four walls of the container and the metallic rods are secured thereto, conveniently by welding. Some rods are secured to a respective flange associated to the walls 4*a*, 4*c* whilst others are secured to a respective flange associated with the walls 4*b*, 4*d*. In an alternative construction the grating may consist of metallic rods running in one direction only.

The wall 4*d* is provided with four pear shaped holes 10 by means of which the mail box is retained on the wall or door containing the mail opening, screws being used for this purpose. A mail receiving slot 12 is provided in the wall 4*d* and in use this is aligned with the mail opening in the door or wall as the case may be. The mail receiving slot opens into the compartment A.

The wall 4*b* has an opening 14 giving access to the compartment A, and a hinged door 16 for the opening which is provided with an external catch 18 to retain the door in the closed position.

The compartment B, has a removable lid 20 which is secured in position by four self taping screws 22. Alternatively the lid 20 may be HINGED.

A bag, preferably polythene containing sand or fine gravel which acts as the flame extinguishing means is placed in the compartment B where it is supported on the grid. The lid is secured in place. Any other suitable flame extinguishing material may be used.

Should a fire occur in the compartment A, for example if a paraffin soaked rag is ignited, then the flames will melt the polythene bag and the sand will be released. The burning material will be covered with sand and the flames extinguished by suffocation. Thus the likelihood of extensive damage and the spread of fire is substantially reduced by utilising a mail box in accordance with the invention.

In an alternative embodiment of the invention (not illustrated) the mail box comprises a box shaped compartment having four walls, a base and a roof, constructed of metal and adapted to be secured to a door or wall having a mail opening therein. One wall has a letter opening for receiving mail to be deposited in the box and another wall, preferably opposite the letter opening, has a second opening closable by a mail access door.

A fire extinguisher, preferably of the foam generator or dry powder type, is located such that in operation the extinguishing agent enters the mail compartment and extinguishes any fire therein. Preferably, the fire extinguisher is located outside of the compartment and a nozzle of the extinguisher projects into the compartment through a hole in any one of the walls, roof or floor, but preferably the roof. Preferably the extinguisher is activated by a heat or flame detector located in the compartment.

CLAIMS

1. A mail box comprising a compartment having an opening for depositing mail into the compartment, an access door for removing mail from the compartment and flame extinguishing means for extinguishing a fire in the compartment.

2. A mail box as claimed in claim 1, in which a

second compartment is disposed above the mail receiving compartment, and separated therefrom by a grating which second compartment has an access door and contains the flame extinguishing means.

3. A mail box as claimed in claim 1 or 2, in which the fire extinguishing means comprises a dry powder or foam fire extinguisher whose outlet nozzle directs extinguishant into the compartment and the extinguisher is activated by a heat sensor disposed in the compartment.

4. A mail box as claimed in claim 1 or 2, in which the flame extinguishing means comprises a plastics bag filled with sand or gravel.

5. A mail box as claimed in claim 4, when appendant to claim 2, in which the bag containing the extinguishing material is supported by the grating.

6. A mail box as claimed in claim 4, in which the bag is suspended from a roof of the mail box.

7. A mail box as claimed in claim 1, comprising a substantially rectangular container which is divided into two compartments by a permeable mesh the first compartment having a lockable mail acess for removing mail deposited therein and the second compartment containing extinguishing means and having a hinged access door.

8. A mail box constructed and arranged substantially as hereinbefore described with reference to and as illustrated in the accompanying drawings.

Printed for Her Majesty's Stationery Office by Croydon Printing Company Limited, Croydon, Surrey, 1981.
Published by The Patent Office, 25 Southampton Buildings, London, WC2A 1AY, from which copies may be obtained.