Feb. 2, 1960 F. R. WERNER ET AL 2,923,234

SLIP PRINTING MECHANISM FOR CASH REGISTERS AND ACCOUNTING MACHINES

Filed July 1, 1955 4 Sheets-Sheet 1

FIG. 2

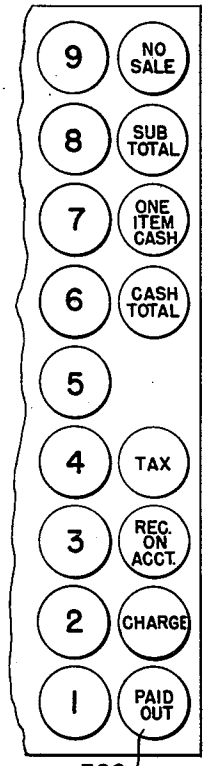

FIG. 1

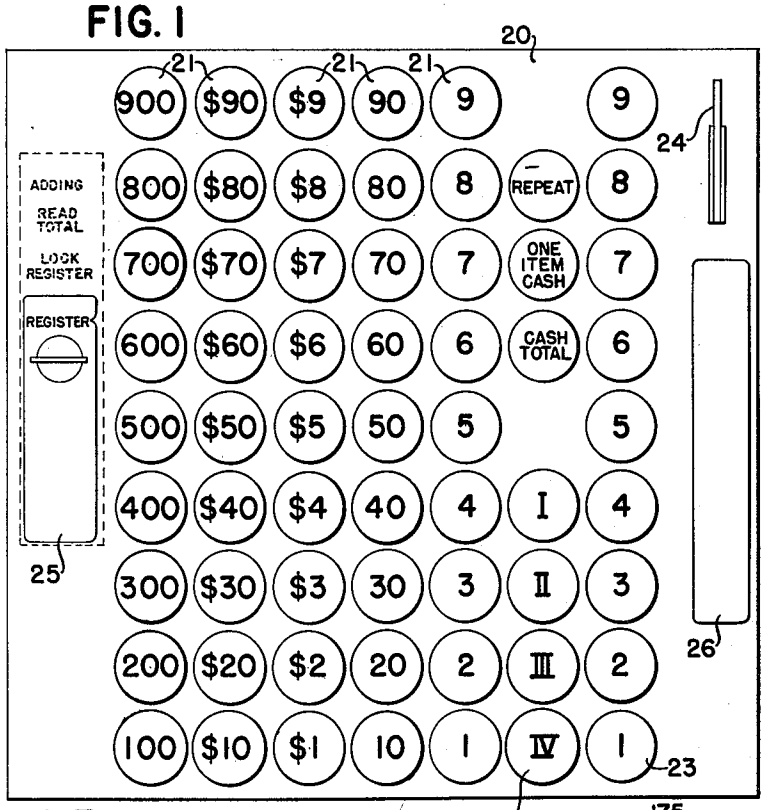

FIG. 3

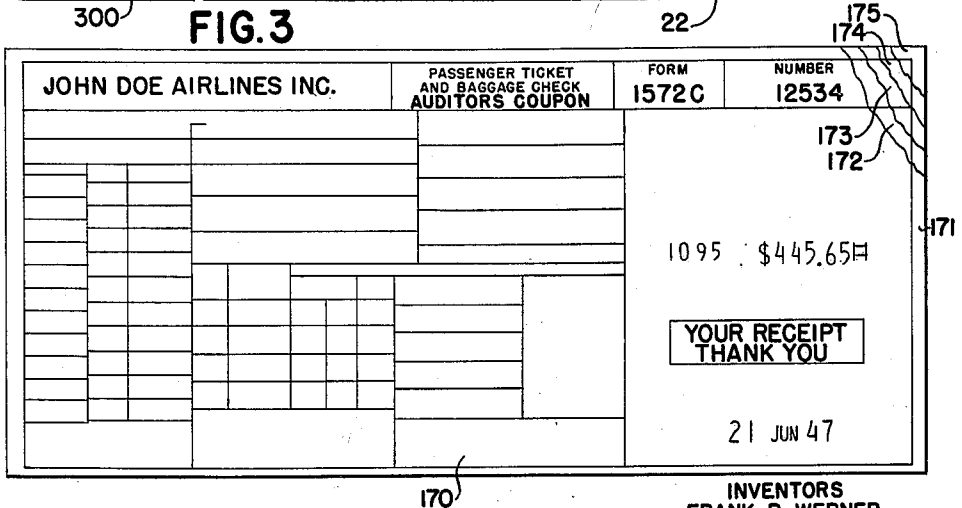

INVENTORS
FRANK R. WERNER
RICHARD C. SCHWINN &
WALTER G. STERZER

BY Earl Reust
Richard Van Buren

THEIR ATTORNEYS

Feb. 2, 1960 F. R. WERNER ET AL 2,923,234

SLIP PRINTING MECHANISM FOR CASH REGISTERS AND ACCOUNTING MACHINES

Filed July 1, 1955 4 Sheets-Sheet 2

FIG. 4

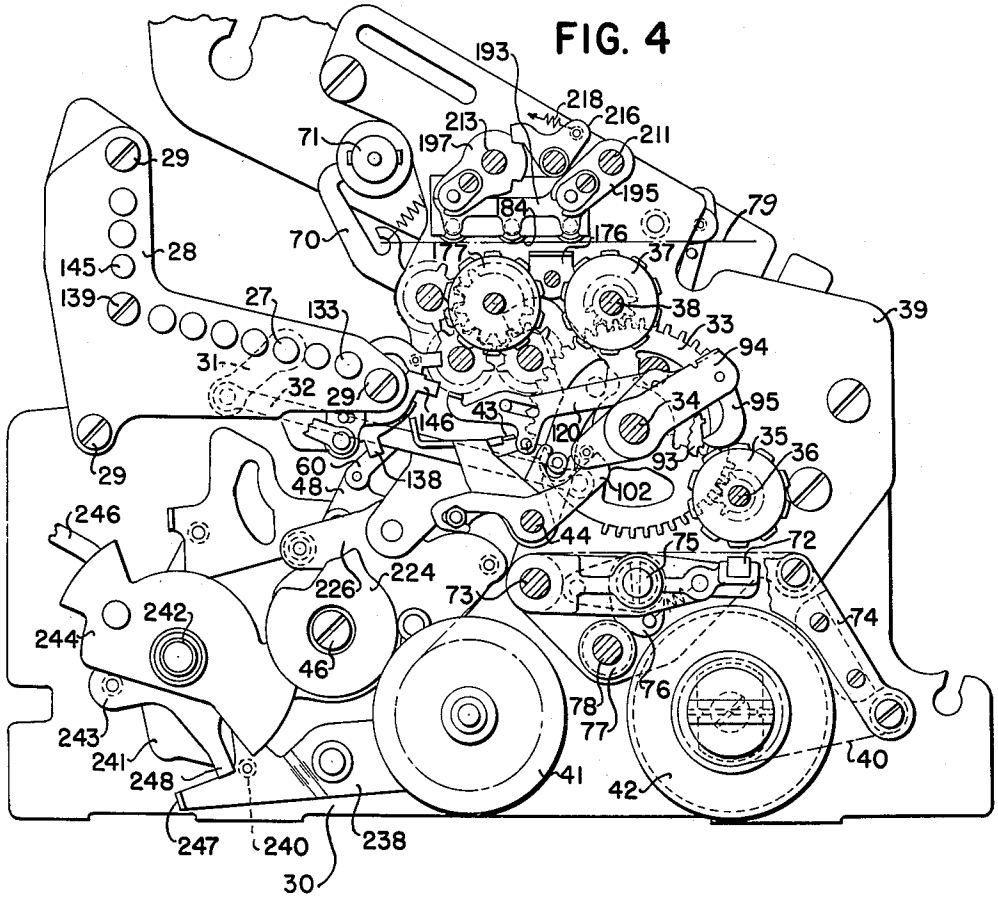

INVENTORS
FRANK R. WERNER
RICHARD C. SCHWINN &
WALTER G. STERZER

BY Karl Ernst
Richard Van Buskirk

THEIR ATTORNEYS

Feb. 2, 1960 F. R. WERNER ET AL 2,923,234

SLIP PRINTING MECHANISM FOR CASH REGISTERS AND ACCOUNTING MACHINES

Filed July 1, 1955 4 Sheets-Sheet 3

FIG. 5

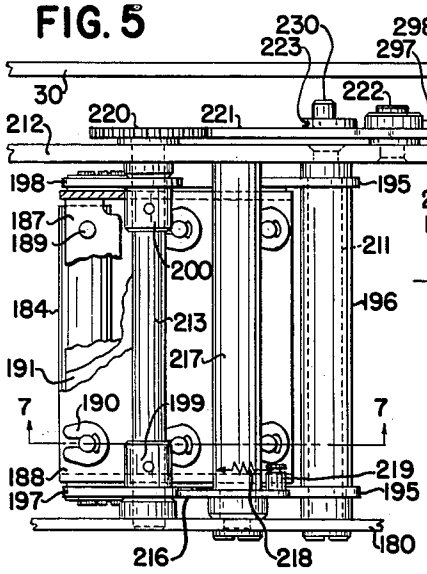

FIG. 6

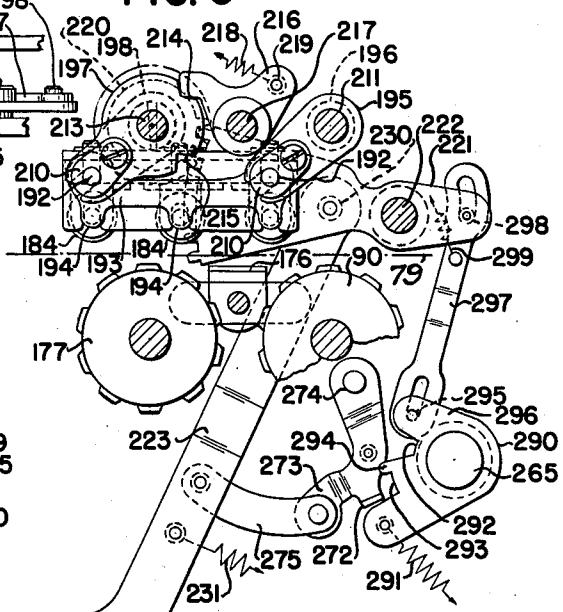

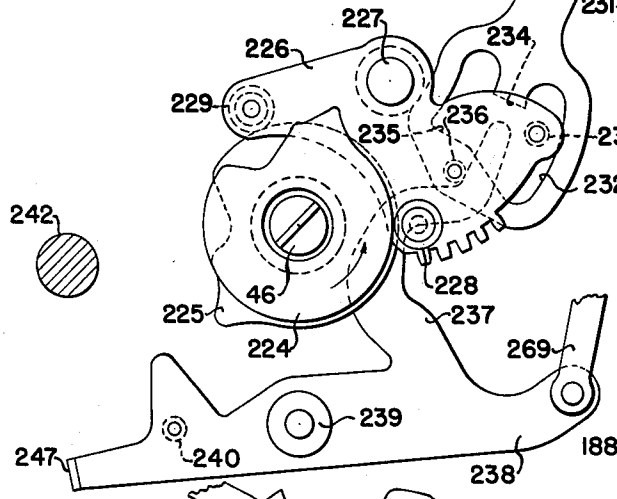

FIG. 7

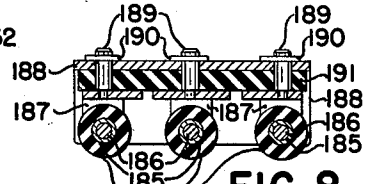

FIG. 8

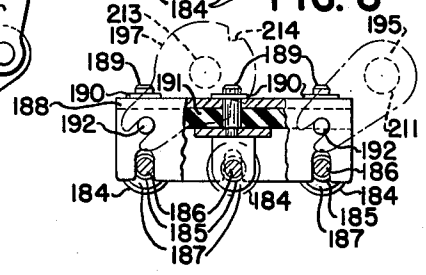

FIG. 9

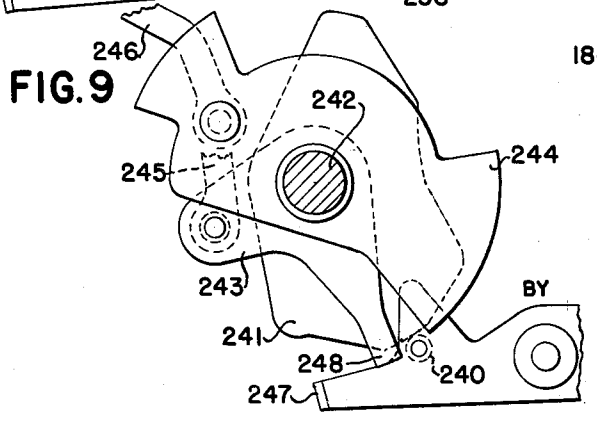

INVENTORS
FRANK R. WERNER
RICHARD C. SCHWINN &
WALTER G. STERZER

BY

Pearl Berust

Richard Van Buscum

THEIR ATTORNEYS

Feb. 2, 1960 F. R. WERNER ET AL 2,923,234

SLIP PRINTING MECHANISM FOR CASH REGISTERS AND ACCOUNTING MACHINES

Filed July 1, 1955 4 Sheets-Sheet 4

FIG. 10

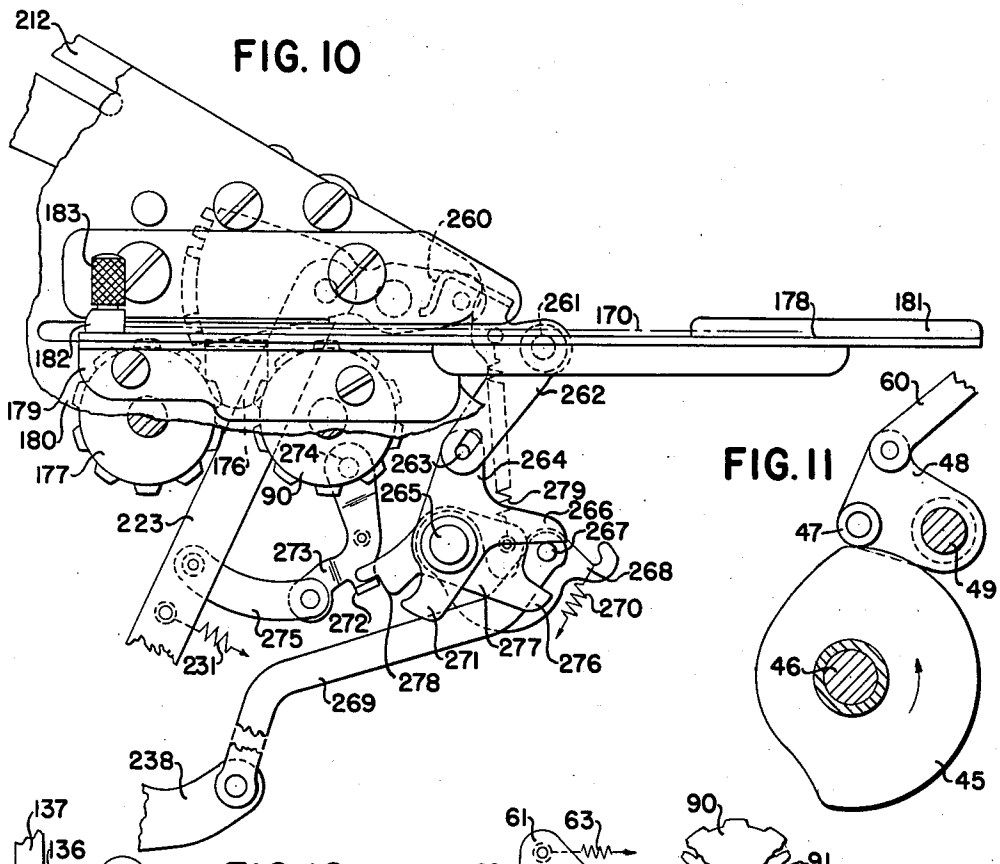

FIG. 11

FIG. 12

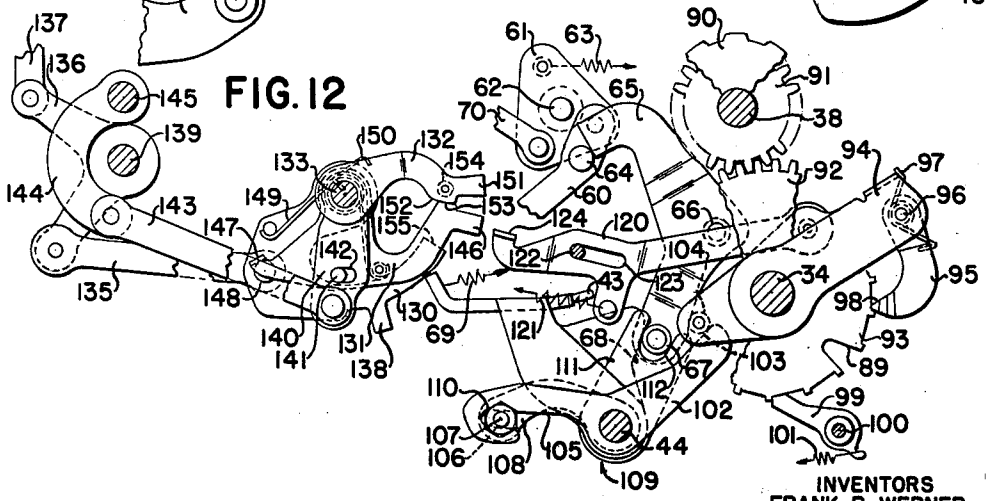

INVENTORS
FRANK R. WERNER
RICHARD C. SCHWINN &
WALTER G. STERZER

BY Pearl Bennett
Richard Van Buskirk

THEIR ATTORNEYS

United States Patent Office 2,923,234 Patented Feb. 2, 1960

2,923,234

SLIP PRINTING MECHANISM FOR CASH REGISTERS AND ACCOUNTING MACHINES

Frank R. Werner, Richard C. Schwinn, and Walter G. Sterzer, Dayton, Ohio, assignors to The National Cash Register Company, Dayton, Ohio, a corporation of Maryland

Application July 1, 1955, Serial No. 519,424

9 Claims. (Cl. 101—274)

The present invention relates generally to cash registers and accounting machines and is particularly directed to the printing mechanism of such machines.

An object of this invention is the provision of an improved mechanism for printing records on record material.

Another object is to provide a cash register or an accounting machine with a simple and efficient mechanism for printing a multiple-copy slip or ticket inserted into the machine.

Still another object is the provision of an improved construction of a roller-type printing mechanism.

A further object is the provision of a printing mechanism capable of forcing the record material consisting of a plurality of superimposed sheets provided with transfer means against the type wheels with sufficient force to enable clear impressions to be obtained simultaneously on the several sheets.

Another object is the provision of a roller-type printing mechanism in which rollers traverse the type faces under sufficient pressure to cause clear impressions to be simultaneously made upon several sheets of paper provided with transfer means and interposed between the type faces and the rollers.

Still another object is to provide control means for a roller-type printing mechanism whereby during any printing operation the rollers traverse the type faces in one direction only and during the next printing operation are automatically caused to traverse the type faces in the opposite direction.

A further object is the provision of mechanism for printing consecutive numbers in the records of succeeding transactions.

Another object is the provision of control means for the consecutive numbering mechanism whereby type wheels for consecutive numbering may be selectively advanced by one increment, depending upon the type of machine operation.

Still another object of the present invention is to provide a cash register or an accounting machine with a simple and efficient mechanism for identifying each distinct series of operations by means of a different symbol.

An additional object is the provision in a cash register or an accounting machine of a consecutive numbering mechanism for printing an identifying number on record material and means responsive to the operation control slide and the control keys for selectively changing the identifying number.

With these and incidental objects in view, the invention includes certain novel features of construction and combinations of parts, a preferred form or embodiment of which is hereinafter described with reference to the drawings which accompany and form a part of this specification.

In the drawings:

Fig. 1 is a diagrammatic view of one modification of the keyboard of the machine embodying the present invention.

Fig. 2 is a diagrammatic view of a portion of a second

modification of the keyboard of the machine embodying the present invention.

Fig. 3 is a facsimile of a typical airline ticket comprising several superimposed sheets of paper on which appropriate data has been entered by the machine embodying the present invention.

Fig. 4 is a left side elevation of the machine showing in a general way the slip impression unit, the consecutive numbering mechanism and control means therefor, and the detail strip feeding and printing mechanism.

Fig. 5 is a top plan view of the slip impression unit and its supporting means.

Fig. 6 is a detail view showing the operating mechanism for the slip impression unit and part of the mechanism for controlling the functioning of said operating mechanism.

Fig. 7 is a sectional view of the slip impression unit taken on line 7—7 of Fig. 5.

Fig. 8 is a left side elevation of the slip impression unit with a portion of the impression roll holder broken away to show part of the impression tension pad and one of the impression roll yokes.

Fig. 9 is a detail view showing additional mechanism for controlling the operation of the slip impression unit.

Fig. 10 is a left side elevation showing supporting means for the slip impression unit, the slip table, and additional mechanism for controlling the operation of the slip impression unit.

Fig. 11 is a detail view showing the type wheel aliner cam and its follower.

Fig. 12 is a detail view showing the consecutive numbering mechanism and control means therefor, and the type wheel aliner.

DESCRIPTION

The present invention is directed to improvements in combined cash registers and adding machines of the general type disclosed in the United States Patent No. 2,443,652, issued June 22, 1948, to Edward J. Carey et al., and United States Patent No 2,450,165, issued September 28, 1948, to Harold O. Randall et al., to which patents reference may be had for a complete disclosure of mechanism which is not pertinent to the present invention and which for that reason will not be described or illustrated herein.

Likewise, the improved mechanism disclosed in the present application is applied to a machine which is similar with regard to certain details of construction to the machines disclosed in the following co-pending applications for Letters Patent of the United States: Serial No. 255,870, filed November 10, 1951, now U.S. Patent No. 2,722,887, issued November 8, 1955, inventors Frank R. Werner and Walter G. Sterzer; Serial No. 488,288, filed February 15, 1955, now U.S. Patent No. 2,798,429, issued July 9, 1957, inventors Frank R Werner and Walter G. Sterzer (a division of application Serial No. 255,870); and Serial No. 306,762, filed August 28, 1952, now U.S. Patent No. 2,710,576, issued June 14, 1955, inventors Frank R. Werner, Walter G. Sterzer, and Louis E. Zurbuchen.

Machine in general

The mechanism of the machine is enclosed in a suitable case or cabinet secured to a machine base which in turn supports the framework of the machine. Neither the cabinet nor the base is shown herein, but the cabinet may be similar in shape to the cabinet in the above-cited application Serial No. 306,762. However, it is contemplated that, in some applications of the machine of the present invention, the visible indicators will not be used, and the section of the cabinet housing the indicators will therefore be eliminated.

Depending upon the particular application of the machine of the present invention, the machine base may be secured to the top surface of the drawer cabinet, which houses a cash drawer having suitable partitions for coins and currency, the cash drawer being arranged to open automatically upon certain types of operations of the machine. Also a coin panel for use in making change may be located above the cash drawer upon the top surface of the drawer cabinet. These constructions are not illustrated herein, but are fully disclosed in the above-cited application Serial No. 306,762.

The machine as illustrated is provided with a keyboard 20, which comprises five rows or denominational orders of amount keys 21 (Fig. 1) which through the usual corresponding differential mechanisms (not shown) control the positioning of corresponding type wheels, as will be explained presently, and also control the positioning of the usual corresponding actuators (not shown), which are adapted to coact with the usual totalizers (not shown). The keyboard also includes the row of transaction or control keys 22 for controlling the positioning of the corresponding type wheels to record the type of transaction being performed and also for controlling the engagement and disengagement of the totalizers with and from the actuators and also for controlling the shifting of the totalizers to effect the proper selection thereof. The keyboard also comprises a row of department keys 23, which control the positioning of corresponding type wheels for printing characters which may be used, for example, to identify the clerk handling the transaction, to describe the goods or services being sold, or to designate the departments from which goods or services are sold.

A key release lever 24 is provided for releasing depressed amount or control keys and is likewise used for restoring the motor starting bar and associated mechanism from depressed position to underpressed position, in case said motor bar is inadvertently retained depressed at the end of machine operation.

The machine is provided with the usual operation control slide 25, which is shiftable to various positions to control the functioning of the machine. As may be seen in Fig. 1, these positions are Register, Lock Register, Read Total, and Adding. Of course, it is obvious that additional positions, such as a Reset Total position, wherein the group totalizer may be read and then reset to zero, could be provided if desired. The control slide 25 is provided with a lock and key for controlling its movement, so that only authorized persons may operate said slide. In some cases, the lock for the control slide 25 may be provided with two keys, one of which permits the slide to be moved only between Register and Lock Register positions, while the other permits movement of the slide to any of its four positions. Such latter key is generally retained by the proprietor or other authorized person. The control slide 25 also controls the positioning of corresponding type wheels for printing characters to identify the functions controlled by said slide.

The machine is provided with the usual starting bar 26 located at the right hand side of the machine for initiating machine operations, which under normal conditions are performed electrically. However, a hand crank (not shown) is provided for operating the machine manually if necessary or desirable, due to unusual conditions.

The five rows of amount keys 21 (Fig. 1) through their differential mechanisms (not shown) position corresponding shafts 27 (Fig. 4) in accordance with the values thereof, said shafts being journaled in the machine framework, including a right frame (not shown) and a left auxiliary framework comprising similar plates 28 spaced apart by screw studs 29. The plates 28 are secured to an upper left frame (not shown) secured to a main left frame 30, in turn secured to the machine base. Secured on the left hand end of each of the shafts 27 is a corresponding crank 31 connected by a link 32 to a corresponding type wheel driving segment 33 rotatively supported on a stud 34 secured in the frame 30. The segments have on their forward edges gear teeth which mesh with pinions integral with corresponding type wheels 35 and 37 rotatively supported, respectively, on studs 36 and 38, secured in the frame 30. The outer ends of the studs 34, 36, and 38 (Fig. 4) are supported by a plate (not shown) secured in spaced relationship to a companion plate 39 in turn secured by screw studs in proper spaced relationship to the left frame 30.

The type wheels 35 are arranged for the printing of values corresponding to the depressed amount keys on the web of a detail strip 40 (Fig. 4), which web is unwound from a supply roll 41 mounted in the machine framework onto a receiving roll 42 also mounted in the machine framework, and in certain types of operation of the machine said roll 42 is advanced an increment of movement to properly space the detail strip.

The mechanism for rotating the receiving roll 42 to advance the detail strip 40 is similar in every respect to the corresponding mechanism disclosed in the co-pending application Serial No. 255,870, to which reference may be had for a complete description of this mechanism.

The type wheels 37 are arranged to print values corresponding to the depressed amount keys upon a slip or ticket which may be inserted into the machine, as will be more fully described hereinafter.

Type wheel aliner

The segments 33 (Fig. 4) are provided with a series of alining teeth which are arranged to be engaged by an alining bar 43 (Figs. 4 and 12) having parallel side arms rotatably supported on a stud 44 secured in the machine framework, said aliner being actuated so as to engage the teeth in segments 33 after said segments have been positioned and prior to operation of the impression mechanism, to hold said segments and the type wheels 35 and 37 in position during operation of said impression mechanism. The aliner 43 is operated by a cam 45 (Fig. 11) secured on a main cam shaft 46 journaled in the machine framework, the periphery of said cam coacting with a roller 47 mountd on an arm 48 free on a stud 49 secured in the frame 30. A link 60 (Figs. 11 and 12) pivotally connects the arm 48 to a companion arm 61 free on a fixed stud 62. A spring 63 urges the arm 61 clockwise, which through the link 60 urges the arm 48 counterclockwise to maintain the roller 47 in yielding engagement with the edge of the cam 45. The link 60 carries a roller 64, which coacts with the left-hand extension of a lever 65 free on a stationary stud 66, said lever carrying a roller 67, which coacts with a cam surface 68 on an extension of the inner arm of the aliner 43.

During each machine operation, the main cam shaft 46 (Fig. 11) and the cam 45 receive one counter-clockwise revolution of movement, and during this movement a low portion of the periphery of said cam 45, in cooperation with the roller 47, permits the spring 63 to shift the link 60 downwardly to withdraw the roller 64 from the extension of the lever 65, to free said lever and the aliner 43 to the action of a spring 69, which is secured to the aliner 43 and to a portion of the machine framework, and which rocks said aliner clockwise to engage it with the teeth in the segments 33 prior to operation of the impression mechanism, so that said segments and the type wheels geared thereto will be retained in set positions during operation of said impression mechanism. After the impression mechanism has operated, the cam 45, in cooperation with the roller 47, restores the link 60 upwardly, causing the stud 64 to restore the lever 65 clockwise to normal position, as shown in Fig. 12, to disengage the aliner 43 from the teeth of the segments 33, so that said segments may be positioned under control of the corresponding mechanisms in the succeeding machine operation.

Also pivotally connected to the arm 61 (Figs. 4 and 12) is a ribbon feed pawl 70, which is maintained in yielding engagement with the teeth of a ribbon feed ratchet 71, whereupon rotation of the cam 45 and consequent rocking movement of the lever 61 shift the feed pawl 70 up and down, causing the tooth thereof, in cooperation with the ratchet 71, to advance said ratchet one increment of movement each machine operation, to feed an inking ribbon 79 (Fig. 4) so that a freshly inked portion thereof will be presented to the type wheels each machine operation to insure a clear and distinct impression.

The entire ink ribbon assembly, with the exception of the ratchet 71 and the feed pawl 70, is mounted on a ribbon support plate 180 (Figs. 5 and 10) and is similar to the ink ribbon assembly disclosed in the co-pending application Serial No. 488,288.

Printing hammer for detail strip

A detail impression hammer 72 (Fig. 4) coacts with the type wheels 35 to imprint the data thereon upon the web of the detail strip 40, as it is fed in relation to said wheels and said hammer. The hammer 72 is pivoted on a stud 73 supported between the frame 39 and an auxiliary support plate 74, maintained in proper spaced relationship to said frame by various studs, shafts, and rods extending between said plate and said frame. The hammer 72 freely supports between its side arms a shaft 75 having secured thereon a hammer operating cam 76, which coacts with the periphery of an impression adjusting cone 77 supported by stud 78 extending between the frame 39 and the plate 74, said cone being adjustable along said stud 78 to bring different diameters thereof into coacting relationship with the cam 76 to obtain the desired degree of impression.

Clockwise movement of the shaft 75 (Fig. 4) and the cam 76 causes said cam, in cooperation with the periphery of the cone 77, to rock the hammer 72 counterclockwise, whereupon the platen of said hammer carries the inking ribbon and the detail strip 40 into contact with the type wheels 35 to imprint the data set up on said wheels on said detail strip. Return movement counterclockwise of the shaft 75 and the cam 76 restores the hammer to inoperative position, as shown in Fig. 4.

The mechanism for imparting a rotative movement to the shaft 75, and the means for controlling the operation of this mechanism in response to the type of function performed by the machine, are similar to the corresponding mechanism disclosed in the co-pending application Serial No. 306,762, to which reference may be had for a complete description of this mechanism.

Consecutive numbering mechanism.

A novel mechanism is provided for printing consecutive identifying numbers in the records of succeeding transactions, so that each distinct series of operations is identified by a different number.

Type wheels 90 (Fig. 12), which print the identifying numbers on a slip which may be inserted into the machine are mounted free on shaft 38 to the outside of type wheels 37 (Fig. 4), which, it will be recalled, are also mounted on shaft 38. Type wheels 90 are separated from type wheels 37 by a printer support plate (not shown). Similar type wheels (not shown), which print the identifying numbers on the detail strip 40, are mounted free on shaft 36 (Fig. 4) to the outside of type wheels 35 and are separated from the type wheels 35 by the abovementioned printer support plate. Each type wheel 90 has a pinion 91 (Fig. 12) integral therewith, which meshes with gear teeth on a consecutive numbering segment 92 free on shaft 34. Integral with each segment 92 and also free on shaft 34 is a consecutive numbering ratchet 93.

It will be seen that rotation of one of the ratchets 93 will cause a rotation of the corresponding type wheel 90 such as to position a different type character in printing position. Such rotation is accomplished by means of a consecutive number drive yoke 94 (Fig. 12) provided with a driving pawl 95. Pawl 95 is free on a shaft 96 secured in the end of yoke 94 and is urged in a clockwise direction relative to yoke 94 by spring 97, so that a tooth 98 of pawl 95 is urged into engagement with ratchet 93. As shown in Fig. 12, pawl 95 has four teeth of varying lengths. Each of these teeth is positioned in alinement with one of the ratchets 93, the longest tooth being alined with the ratchet corresponding to the lowest order consecutive numbering type wheel. Each ratchet is provided with a deep notch, such as is shown at 89 on ratchet 93, for the purpose of effecting an addition of one to the next higher order as each order passes from nine to zero, in a manner well known in the art.

Movement of yoke 94 in a clockwise direction acts through engagement of tooth 98 on pawl 95 with the teeth on ratchet 93, to advance the ratchet in a clockwise direction, thus advancing the type wheel 90 in a counter-clockwise direction. In Fig. 12, yoke 94 is shown positioned at the limit of its clockwise movement.

Each of the ratchets 93 is retained against movement, except when it is being rotated in a clockwise direction by driving pawl 95, by means of a retaining pawl 99 free on a shaft 100 secured in and extending between two of the printer support plates (not shown). Each retaining pawl 99 is urged in a clockwise direction by a spring 101 to maintain the pawl in engagement with the ratchet 93.

Clockwise movement is imparted to yoke 94 by the coaction of a surface 103 of a yoke drive lever 102 with a stud 104, which is secured in one leg of the yoke 94. Lever 102 is free on stud 44. One arm 105 of lever 102 is slotted at 106 to receive a threaded stud 107, which is secured to a leg 108 of a yoke 109, thus forming a sliding connection between arm 105 and leg 108. A nut 110 is threaded on stud 107 to retain the arm 105 and the leg 108 in connected relation. Yoke 109 also includes a leg 111, which is notched as shown at 112 in Fig. 12 to receive the roller 67, which is mounted on lever 65.

Pivotally attached to the drive yoke 94 is a feeler or sensing lever 120 having an integral bent-over ear 124. The feeler 120 is urged to the left as viewed in Fig. 12 by a spring 121 to sense for the presence of high or low portions on a control mechanism which will presently be described. Engagement of ear 124 with any high portion of the control mechanism blocks movement of feeler 120 to the left. Movement of feeler 120 is guided and limited by the cooperation of the slot 123 therein with a headed stud 122 mounted in one of the printer support plates (not shown).

It will be recalled that during each machine operation the main cam shaft 46 (Fig. 11) and the cam 45 receive one counter-clockwise revolution of movement, and during this movement the roller 64 (Fig. 12) is withdrawn from the extension of the lever 65, to free said lever for counter-clockwise rotation about its pivot 66. Through contact of cam surface 68 on aliner 43 with roller 67 on lever 65, spring 69 on aliner 43 urges lever 65 and roller 67 in a counter-clockwise direction. Engagement of roller 67 with the edges of the notched portion 112 of leg 111 of yoke 109 causes yoke 109 to rotate clockwise about its pivot 44. This clockwise rotation of yoke 109 is transmitted through leg 108 to yoke drive arm 105 and moves the lever 102 out of the position shown in Fig. 12, in which it blocks counter-clockwise movement of stud 104 about shaft 34. Movement of lever 102 out of blocking engagement with stud 104 frees feeler 120 to the action of spring 121 and permits ear 124 of feeler 120 to sense for the presence of a high or low portion on the control mechanism.

In the event that a low portion of the control mechanism is positioned opposite ear 124 of feeler 120, the

feeler 120 will be moved to the left as viewed in Fig. 12 under the influence of spring 121, thereby rotating yoke 94 counter-clockwise sufficiently to cause a tooth 98 of driving pawl 95 to ratchet upwardly over a tooth of ratchet 93.

Near the end of the cycle of machine operation, cam 45 (Fig. 11) in cooperation with roller 47 will restore link 60 upwardly, causing stud 64 (Fig. 12) to restore the lever 65 clockwise, which in turn will rotate the yoke drive lever 102 counter-clockwise and, through the engagement of surface 103 and stud 104, will rotate the yoke 94 clockwise. By means of driving pawl 95, this movement will advance ratchet 93, and consequently the consecutive numbering type wheel 90, one increment, so that a different number will appear when the next transaction is recorded. It will be noted that this addition of one to the number does not take place until after the printing operation of the present machine cycle has been completed.

On the other hand, if a high portion of the control mechanism is positioned opposite the ear 124 of feeler 120, the feeler 120 and the yoke 94 will be retained against movement out of the position in which they are shown in Fig. 12. As a consequence, the movements of lever 102 during the cycle of machine operation will be without effect on yoke 94, and the ratchet 93 and the consecutive numbering type wheel 90 will not be advanced.

Novel means are provided for controlling the consecutive numbering mechanism according to the type of operation of the machine. Such means includes three selection plates 130, 131, and 132, all of which are free on a shaft 133 (Figs. 4 and 12), said shaft being journaled in the machine framework, including a right frame (not shown) and a left auxiliary framework comprising similar plates 28 spaced apart by screw studs 29.

Selecting plate 130 is connected, by a link 135, a bell crank 136, free on a shaft 139 mounted in the machine framework, and a link 137, to the differential mechanism for the row of transaction or control keys 22 (Fig. 1), so that said selecting plate 130 is positioned according to which, if any, of the transaction keys 22 is depressed. In Figs. 4 and 12, the plate 130 is shown in "zero" position, to which it is adjusted in a machine operation in which no transaction key 22 is depressed. It will be noted that in the embodiment shown in Figs. 4 and 12, there is one high portion 138 on plate 130, which will be positioned in the path of movement of the ear 124 of feeler 120 when the machine is operated with the "Repeat" key 22 (Fig. 1) depressed.

The second selecting plate 131 is connected to an arm 140 free on shaft 133 by means of a stud 141 on plate 131, which rides in a slot 142 in arm 140. The arm 140 in turn is connected, through a link 143, a crank 144, and a shaft 145, which is mounted in the machine framework and to which crank 144 is secured, to the control lock slide 25 (Fig. 1), so that said selecting plate 131 is positioned according to the position of the control lock slide 25. At one end, plate 131 is provided, for a purpose presently to be disclosed, with an ear 147, which is positioned to be engageable by the head of a pivot member 148, which connects selecting plate 130 and link 135. The ear 147 is constantly urged counter-clockwise relative to plate 130 and toward engagement with the head of pivot member 148 by means of a spring 149, which is connected at one end to selecting plate 130, and at its other end to selecting plate 131, and which is coiled in its intermediate portion about shaft 133.

A third selecting plate 132 (Fig. 12) is urged in a clockwise direction about shaft 133 by a spring 150, one end of which bears against plate 132 and the other end of which is secured to shaft 133. Plate 132 has one high portion 151, which, during certain operations of the machine, will be interposed in the path of movement of ear 124 of feeler 120, as will be presently described. A surface 152 on plate 132 is positioned to be engageable with surface 153 of selecting plate 131. In addition, a stud 154 is secured in plate 132 in such position as to be engageable with surface 155 of selecting plate 130.

The operation of the consecutive numbering control mechanism during different types of operation of the machine will now be described.

When control lock slide 25 is moved to Register position, as shown in Fig. 1, arm 140 will be moved by shaft 145, crank 144, and link 143 to the position in which it is shown in Fig. 12. It will be noted that the stud 141 and slot 142 connection between arm 140 and plate 131 permits some lost motion between the two, and therefore allows selecting plate 131 to assume either of two different positions, depending upon the position of plate 130, which, as has been stated, is connected to the transaction differential mechanism.

If no transaction key 22 has been depressed prior to machine operation, the transaction differential mechanism, through link 137, bell crank 136, and link 135 will cause selecting plate 130 to be positioned in "zero" position, as shown in Fig. 12. It will be seen that in the "zero" position of plate 130, the head of pivot member 148 engages ear 147 on plate 131 and thereby retains plate 131 against the force of spring 149 in such position that high portion 146 of plate 131 is interposed in the path of movement of ear 124 of feeler 120, thus preventing operation of the consecutive numbering mechanism in a machine operation in which no transaction key 22 is depressed. The reason for such arrangement is that machine operations in which no transaction key is depressed are itemizing operations, which constitute only part of a complete multiple-item transaction. It is desirable that each item in the transaction bear the same identifying number, and that this number not be changed until the multiple-item transaction has been completed.

If the plate 130 is not in "zero" position, the head of pivot member 148 will not engage ear 147 and therefore will not retain plate 131 against the force of spring 149. The spring 149, which is stronger than the spring 150, will move plate 131 counter-clockwise as viewed in Fig. 12 to the extent permitted by the travel of stud 141 in slot 142, and will thus position high portion 146 of plate 131 above and out of the path of movement of ear 124 of feeler 120.

As has been described, selecting plate 130 has one high portion 138, which is moved to a position opposite and in the path of ear 124 of feeler 120 when the machine is operated with the "Repeat" transaction key 22 depressed, and thus prevents operation of the consecutive numbering mechanism. The reason for such arrangement is that the "Repeat" transaction key 22 initiates what is in effect a sub-total operation. Since such an operation does not complete a transaction, it is desirable that the number identifying the transaction not be changed.

It will be seen from the above description that, when control lock slide 25 is in Register position, a high portion of the consecutive numbering control mechanism will be interposed in the path of movement of ear 124 of feeler 120 only in the following types of machine operations: first, when no transaction key 22 is depressed, and second, where the "Repeat" transaction key 22 is depressed.

When control lock slide 25 is moved to Lock Register position, the arm 131 will assume a position in which high portion 146 will be interposed in the path of movement of the ear 124 of feeler 120.

When control lock slide 25 is moved to Read Total position, arm 131 will assume a position in which high portion 146 will be below and out of the path of movement of the ear 124 of feeler 120, thus permitting full sensing movement to the left, as viewed in Fig. 12, of feeler 120. In this connection, it may be noted that the present machine is provided with an interlock means, which prevents depression of any of the amount keys 21,

transaction keys 22, or department keys 23, when the control lock slide 25 is in Read Total position. Such interlock means is fully disclosed in the above-cited patent to Carey et al. Depression of the motor bar 26 alone operates the machine when the control lock slide is in Read Total position, and advances the consecutive numbering type wheels by one.

When control lock slide 25 is moved to Adding position, plate 131 will assume a position in which high portion 146 will be below the position it is in when control lock slide 25 is in Read Total position. It will be recalled that selecting plate 132 is free on shaft 133 and is urged clockwise, as viewed in Fig. 12, by spring 150. Therefore, plate 132 will constantly have its surface 152 in abutting relationship with surface 153 on selecting plate 131, except when its spring-urged clockwise movement is blocked by the engagement of its stud 154 with surface 155 of selecting plate 130, as will subsequently be described.

The selecting plate 131 is so positioned when control lock slide 25 is in Adding position that, in a machine operation in which plate 132 is not blocked by the coaction of stud 154 and surface 155 from abutting the plate 131, high portion 151 on plate 132 will be interposed in the path of movement of the ear 124 of feeler 120, and thus prevent operation of the consecutive numbering mechanism.

On the other hand, if selecting plate 132 is moved or retained out of abutting engagement with selecting plate 131, due to the position of selecting plate 130, the high portion 151 of plate 132 will be moved or retained out of the path of movement of ear 124 of feeler 120.

A machine operation with the control lock slide 25 in Adding position, in which any of the I, II, III, "Cash Total," "One Item Cash," or "Repeat" transaction keys 22 are depressed, will position the selecting plate 130 so that its surface 155 will engage the stud 154 on plate 132, and will move or retain plate 132 so that high portion 151 on plate 132 is positioned above and out of the path of movement of ear 124 of feeler 120.

Therefore, in a machine operation with the control lock slide 25 in Adding position, and in which any of the I, II, III, "Cash Total" or "One Item Cash" transaction keys are depressed, the feeler 120 will make a full sensing movement to the left, and the consecutive numbering mechanism will be operated to advance the consecutive numbering type wheels by one unit. However, in a machine operation, with the control lock slide 25 in the Adding position, and in which the "Repeat" transaction key 22 is depressed, the selecting plate 130 will be so positioned that the high portion 138 thereon will be in the path of movement of ear 124 of feeler 120, and the consecutive numbering mechanism will not operate.

If desired, interlock means of the type disclosed in the previously mentioned patent to Carey et al. may be provided to prevent depression of any desired ones of the Row 2 transaction keys 22 when the control lock slide 25 is in Adding position. For example, in the machine as illustrated it is contemplated that the "One Item Cash," I, II, and IV keys 22 may be locked against depression by such a means when the control lock slide 25 is in Adding position.

The consecutive numbering type wheels may be reset to "zero" position by a reset mechanism of conventional design (not shown), which is operated by rotation of shaft 34 (Fig. 12). The shaft 34 is provided at its end with a knob (not shown) which is accessible for manual rotation of the shaft.

Slip printing mechanism

A novel mechanism is provided for printing records on a single sheet or multiple sheet slip or ticket, which is inserted into the machine of the present invention.

The slip 170 (Figs. 3 and 10) either may consist of a single sheet or may include multiple sheets having transfer means so that a legible impression can be made simultaneously on all sheets. One form of such a slip is shown in Fig. 3, in the embodiment of an airline ticket composed of a plurality of sheets 171, 172, 173, 174, and 175. Transfer means, such as a carbon backing on each sheet except the last one, is provided so that a legible impression can be made simultaneously on all sheets.

The slip 170 is supported on and directed into printing relationship with the amount type wheels 37 (Fig. 4), the consecutive numbering type wheels 90 (Figs. 6, 10 and 12), the electro 176 (Figs. 4, 6, and 10), and the date type wheels 177 (Figs. 4, 6 and 10), by a slip table 178 (Fig. 10) secured to a bracket 179, in turn secured to the ribbon support plate 180 by suitable screws. The inner edge of the table 178 is bent upwardly to form a guide flange 181 for side-spacing the slip in relation to the amount type wheels 37, the consecutive numbering type wheels 90, the electro 176, and the date type wheels 177. Likewise, an adjustable slip stop bar 182 is provided for locating the slip 170 lengthwise in relation to the printing wheels and electro, and said stop bar is provided with a clamp screw 183, which coacts with a slot in the table 178, to provide means for adjusting the slip 170 with relation to the printing wheels and electro, so that data on these printing elements will be printed in the proper location on said slip.

Three impression rolls 184 (Figs. 5, 6, 7 and 8) coact with the three printing stations, consisting of the amount and consecutive numbering type wheels 37 and 90 on shaft 38, the electro 176, and the date type wheels 177, to imprint the data thereon upon the slip or ticket 170. Rolls 184 are preferably made of synthetic rubber of suitable hardness. Inserted in a longitudinal axial bore in each of the rolls 184 is a sleeve 185. Each roll 184 with inserted sleeve 185 is rotatable on a shaft 186, and each shaft 186 is mounted at its ends in a yoke 187.

The three yokes 187 are resiliently mounted in an impression roll holder 188 by means of studs 189 secured to the yokes 187, extending through holes in the holder 188, and retained against separation from the holder by means of spring clips 190. Positioned between the yokes 187 and the holder 188 is an impression tension pad 191, preferably made of synthetic rubber of suitable hardness. The sides of the impression roll holder are bent downwardly and provided with slots to slidingly receive the ends of the impression roll shafts 186. Projecting from each side of the impression roll holder 188 are two studs 192, which serve as attaching means for an impression roll holder clip 193 (Figs. 4 and 6), one of which is provided at each side of the impression roll holder 188, and which includes cover portions 194 which extend over each of the shaft-receiving slots in the impression roll holder 188.

The studs 192 also serve as pivots by which the impression roll holder 188 with its assembled rolls 184 is mounted for swinging movement on two forward impression roll holder arms 195 (Figs. 5, 6 and 8) connected by a tubular hub 196, and on two rear impression roll holder arms 197 and 198, each having a separate hub 199 and 200 respectively integral therewith. All four of the impression roll holder arms are provided at their lower ends with slots for receiving the studs 192. Secured to each of the forward and rear impression roll holder arms to retain the studs 192 in position in the slots is a clip 210 (Fig. 6). The tubular hub 196 of the forward impression roll holder arms 195 is free on a shaft 211, which is secured in the ribbon support plate 180 (Fig. 5) and a printer support plate 212. Hubs 199 and 200 of the rear impression roll holder arms 197 and 198 respectively are secured to a shaft 213, which is rotatably mounted in the ribbon support plate 180 and the printer support plate 212.

The periphery of rear impression roll holder arm 197 is provided with two notches 214 and 215 (Fig. 6),

slightly more than ninety degrees apart, which cooperate with an impression pitman retaining arm **216** (Figs. 5 and 6). Said arm is free on shaft **217**, which is secured in and extends between ribbon support plate **180** and printer support plate **212**. A strong spring **218**, connected to a stud **219** on the arm **216** and to the ribbon support plate **180**, urges the arm **216** counter-clockwise as viewed in Fig. 6, so that the arm **216** is constantly in engagement with the periphery of rear impression roll holder arm **197** and, when positioned in one of the notches **214** and **215** of arm **197**, tends to yieldingly retain arm **197** and the shaft **213**, to which arm **197** is secured through hub **199**, against movement.

As shown in Fig. 5, shaft **213** extends through the printer support plate **212** and on its end is secured a drive pinion **220**. An impression roll holder drive segment **221** is free on a stud **222** secured in the printer support plate **212** and is provided with teeth which mesh with the teeth of drive pinion **220**.

Rotational movement is imparted to segment **221** by slip impression pitman **223**. The manner in which movement is imparted to the pitman **223** will be subsequently disclosed. At the beginning of any slip printing operation, the segment **221** will be in one of two positions; namely in a "down" position as shown in Fig. 6, or in an "up" position (not shown). Means which will subsequently be disclosed are provided which control the direction of movement of the pitman **223**, so that if the segment **221** is in its "down" position, an upward movement will be imparted to the pitman **223** during the next slip printing operation, and if the segment **221** is in its "up" position, a downward movement will be imparted to the pitman **223** during the next slip printing operation.

Therefore with segment **221** in the "down" position, shown in Fig. 6, movement in an upward direction will be imparted to the pitman **223** during the next slip printing operation. Such upward movement of pitman **223** will rotate segment **221** clockwise as viewed in Fig. 6 about its pivot **222**, which will cause the meshing pinion **220** and the shaft **213**, to which it is secured, to be rotated counter-clockwise. The rear impression roll holder arms **197** and **198**, being secured to shaft **213**, will rotate counter-clockwise with it. The extent of rotation will be such that retaining arm **216** will be positioned in notch **215** at the conclusion of movement. It should be noted that spring **218** (Figs. 5 and 6), which urges retaining arm **216** in a counter-clockwise direction, is sufficiently strong to hold the end of retaining arm **216** in either of the two notches **214** and **215** in the absence of rotation of pinion **220** on shaft **213** by segment **221**, but is not sufficiently strong to resist the torque applied to shaft **213** by rotation of segment **221**. This arrangement enables the arm **216** and the spring **218** to retain the impression mechanism in whichever position it assumes at the end of a printing operation until the next printing operation is begun.

Counter-clockwise rotation of arms **197** and **198** about the axis of shaft **213** will move the impression roll holder **188** with its assembled rolls **184** to the right as viewed in Fig. 6. The forward impression roll holder arms **195**, being free on shaft **211** and being pivotally connected to holder **188** by studs **192**, will rotate in conjunction with the rear arms **197** and **198** and will serve to guide the movement of holder **188**. As is shown in Figs. 4 and 6, the initial or "home" position of arms **195**, **197**, and **198** is angularly displaced from the vertical, so that rotation of these arms will move the holder **188** downwardly, as well as to the right, in an arcuate path.

Rolls **184** on holder **188** will also move in an arcuate path until they are brought into contact with the slip **170** simultaneously at the three places where the slip is backed by the amount and consecutive numbering type wheels **37** and **90** on shaft **38**, the electro **176**, and the date type wheels **177**. In other words, at the same time that the rightmost roll **184**, as viewed in Figs. 4 and 6, is brought into contact with slip **170** at the left edge of the place where the slip is backed by the amount and consecutive numbering type wheels **37** and **90** on shaft **38**, the central roll **184** is brought into contact with the left edge of the place where the slip **170** is backed by the electro **176**, and the leftmost roll **184** is brought into contact with the left edge of the place where the slip **170** is backed by the date type wheels **177**.

As the holder **188** continues its arcuate movement, the rolls **184**, due to their contact with the printing member-backed slip **170**, will be forced to move in a horizontal path rather than an arcuate path. The rolls **184** will rotate during their horizontal movement while engaged with the slip **170**.

During the horizontal movement of the rolls **184**, the vertical component of the movement of the holder **188** is taken up by the resilient mounting of the rolls **184** in the holder **188**. The thrust exerted on rolls **184** by the pad **191** as it is compressed in the take-up movement is applied by the rolls **184** to force slip **170** against the three printing stations to imprint upon the slip the data set up on the printing stations.

The high amount of pressure required to print through a plurality of sheets is achieved by the use of the separate rolls **184**, one for each printing station, and by making these rolls of as small diameter as possible. In other words, it will be seen that with a given force applied to a roll, the area of contact between the roll and the rigid surface upon which it exerts pressure will be inversely proportional to the pressure exerted.

It will also be seen that to a certain degree, the slip printing mechanism compensates automatically for variations in the number of superimposed sheets composing the ticket or slip **170**. That is, the greater the number of sheets to be placed in the machine for printing at one time, the greater the force will be which is exerted on the rolls **184**, due to the fact that increasing the number of sheets decreases the amount of allowable downward movement of the rolls **184** and therefore increases the amount of take-up movement to be absorbed by the tension pad **191**, with a consequent increase in the force which the pad **191** exerts on the roll **184**.

The mechanism for imparting movement to the slip impression pitman **223** will now be described.

Secured to the main cam shaft **46** are two companion plate cams **224** and **225** (Fig. 6). An operating lever **226** is free on a stud **227** and carries rollers **228** and **229**, which cooperate with the peripheries of cams **224** and **225**, respectively. Rotation of the shaft **46** and the cams **224** and **225** through one counter-clockwise revolution each machine operation rocks the lever **226** from its "home" position, as shown in Fig. 6, first clockwise, then counter-clockwise past its "home" position, and finally clockwise back to its "home" position.

Pitman **223** is pivotally connected to the impression roll holder drive segment **221** by stud **230** and is urged to the right or counter-clockwise about its pivot **230** as viewed in Fig. 6 by a spring **231**. The enlarged bottom end of the pitman **223** has an irregular control slot **232**, which cooperates with a stud **233** on the lever **226**. It will be seen that a clockwise movement of lever **226** as viewed in Fig. 6 will result in a generally downward movement of a stud **233** from the position in which it is shown in Fig. 6, and that a counter-clockwise movement of lever **226** will result in a generally upward movement of stud **233** from the position in which it is shown in Fig. 6.

In the relative positions of pitman **223** and stud **233** which are shown in Fig. 6, movement of stud **233** will not affect the position of pitman **223**, since stud **233** is free to idle in the enlarged right hand portion of the control slot **232**. However, it will be seen that, if the enlarged bottom end of pitman **223** is moved to the right sufficiently to interpose a surface **234**, which forms a portion of the boundary of the slot **232**, in the path of

movement of stud 233, a subsequent upward movement of stud 233 will impart an upward movement to pitman 223 such as to rotate the impression roll holder drive segment 221 clockwise from its "down" position to its "up" position, and thus cause rolls 184 to traverse their respective printing stations to the right as viewed in Fig. 6 to effect a printing operation on the slip 170. Similarly it will be seen that if the segment 221 and pitman 223 are in their "up" positions, and if pitman 223 is moved to the right sufficiently to interpose a surface 235, which forms a portion of the boundary of the slot 232, in the path of movement of stud 233, a subsequent downward movement of stud 233 will impart a downward movement to pitman 223 such as to rotate the impression roll holder drive segment 221 counter-clockwise from its "up" position to its "down" position, and thus cause rolls 184 to traverse their respective printing stations to the left as viewed in Fig. 6 to effect a printing operation on the slip 170.

A stud 236 (Fig. 6) fast in the lower end of the pitman 223 is positioned to coact with an upward extension 237 on a sensing lever 238, which is pivoted on a stud 239 secured in the frame 30. The lever 238 is urged in a clockwise direction by the spring 231 to normally retain a stud 240 therein in yielding engagement with a corresponding camming surface on a cam 241 (Figs. 4 and 9), which is free on a stud 242.

Also free on stud 242 are control plates 243 and 244. Control plate 243 is connected by a link 245 to the control slide 25 (Fig. 1), so that movement of said control slide positions control plate 243 accordingly. In Figs. 4 and 9, control plate 243 is shown in the position to which it is adjusted when the control slide 25 is in Register position. Control plate 244 is connected by a link 246 to the differential mechanism for the row of transaction or control keys 22 (Fig. 1), so that said control plate 244 is positioned according to which, if any, of the control keys 22 are depressed. In Figs. 4 and 9, the plate 244 is shown in the "zero" position to which it is adjusted under control of the transaction differential during a machine operation in which no transaction key 22 is depressed.

The initial rocking movement of the cam 241 moves it out of engagement with stud 240. This causes lever 238, urged by spring 231, through the coaction of stud 236 on pitman 223 with extension 237, to sense for high and low portions on the control plates 243 and 244. It will be seen from Figs. 6 and 9 that, unless an ear 247 on lever 238 contacts a high portion on one of the two plates 243 and 244, and thus blocks rotation of lever 238, the lever will rotate clockwise under the urging of spring 231, and will thus permit pitman 223 to rotate in a counter-clockwise direction about its pivot 230, whereby either the surface 234 or the surface 235 may be interposed in the path of movement of stud 233 on operating lever 226, depending upon the position of other control mechanisms, which will presently be described.

On the other hand, it will be seen that if ear 247 on lever 238 contacts a high portion on one of the two plates 243 and 244 upon initial rocking movement of the cam 241, which moves it out of engagement with stud 240, the lever 238 will be blocked against clockwise rotation. Therefore extension 237 will remain in the position in which it is shown in Fig. 6. Since the extension 237 abuts the stud 236 on pitman 223, said pitman will be retained against spring-urged movement in a counter-clockwise direction about pivot 230, whereby the enlarged right hand portion of control slot 232 will be retained in registry with the stud 233 on lever 226, and said stud will thus be ineffective to impart upward or downward movement to pitman 223.

Near the end of each cycle of machine operation, cam 241 is returned to the position shown in Fig. 9, causing lever 238 to assume the position in which it is shown in Figs. 6 and 9, due to the coaction of stud 240 with cam 241, and causing pitman 223 to assume the position in which it is shown in Fig. 6 and in which stud 233 is in registry with the enlarged right-hand portion of control slot 232.

In the illustrated embodiment of the present machine, there is one high portion 248 on the plate 243, which is controlled by the control slide 25. This portion 248 will be interposed in the path of movement of the ear 247 of the lever 238 when the control slide 25 is in Adding position. There are no high portions on the plate 244, which is controlled by the transaction differential, in the illustrated embodiment of the machine. It would, of course, be well within the scope of the present invention to provide high portions wherever desired on the peripheries of plates 243 and 244, depending upon the business application for which the machine was designed.

Mechanism is provided for controlling the printing movement of pitman 223 to permit printing movement of said pitman only when a slip or ticket 170 has been properly inserted into the machine for a printing operation thereon.

Coacting with the slip 170 (Fig. 10) is a slip feeler 260 pivoted on a stud 261 secured in the frame 30, said slip feeler having a downwardly extending arm 262 with a slot which engages a stud 263 in an upward extension of an arm 264 free on a stud 265 secured in the frame 30. The arm 264 has an extension 266, which overlies and coacts with a stud 267 in an arm 268 free on the stud 265, said stud 267 also having pivotally connected thereto the upper end of a link 269, the lower end of which is pivotally connected to the sensing lever 238 (see also Fig. 6), which, as previously explained, coacts with the control plates 243 and 244 to control operation of the pitman 223 and the impression roll holder drive segment 221. A spring 270 urges the arm 268 and the sensing lever 238 clockwise in a sensing direction. The arm 264 has a control extension 271, which coacts with an ear 272 formed outwardly from an arm 273 on a stud 274 in frame 30. A link 275 pivotally connects the arm 273 to the pitman 223 for the purpose of controlling the movement of said pitman to the right. The stud 267 (Fig. 10) also coacts with an extension 276 on an arm 277 free on the stud 265 and having a control surface 278 which coacts with the ear 272. A spring 279, tensioned between the feeler 260 and the arm 277, urges said arm counter-clockwise to normally maintain a finger extending inwardly from the control surface 278 in yielding contact with the upper surface of the ear 272, and said spring urges said feeler 260 also in a counter-clockwise or feeling direction to normally maintain the extension 266 of the arm 264 in yielding contact with the stud 267, as here shown.

When low control surfaces on the plates 243 and 244 (Figs. 4 and 9) permit full clockwise sensing movement of the lever 238, the link 269 (Fig. 10) withdraws the stud 267 from the extension 266 to permit counter-clockwise sensing movement of the feeler 260, under influence of the spring 279. If a slip 170 is in proper position on the table 178, the feeler 260 contacts said slip, and further movement of said feeler and the arm 264 is prevented, and consequently the control extension 271 remains below and out of the path of the ear 272 and does not interfere with the movement of the pitman 223 forwardly or counter-clockwise into coacting relationship with the stud 233. Full clockwise sensing movement of the lever 238 likewise, through the link 269, causes the stud 267 to engage the extension 276 to rock the arm 277 clockwise, against the action of the spring 279, to move the control surface 278 out of the path of the ear 272, so that counter-clockwise movement of the pitman 223 will not be obstructed, and therefore said pitman is free to move under control of the lever 238 (Fig. 6) into coacting relationship with the stud 233, which, in cooperation with one of the control surfaces 234 and 235, urges said pitman either upwardly or down-

wardly depending upon which of the surfaces said stud **233** is alined with, to rotate the impression roll holder drive segment **221** to cause rolls **184** to traverse their printing stations and thus effect a printing operation upon the slip or ticket **170**.

In case there is no slip **170** on the table **178** to obstruct movement of the feeler **260**, said feeler is free to move through an opening in said table **178**, during downward movement of the stud **267**, and consequently the arm **264** moves in unison therewith to move the extension **271** into the path of the ear **272** to retain the pitman **223** in ineffective position, as shown in Fig. 6, in which case the stud **233** operates idly in the enlarged portion of the slot **232**, and therefore does not impart any printing movement to the printing mechanism. In operations of the machine in which either of the control plates **243** or **244** (Fig. 9) is positioned so that a high portion of the periphery thereof (such as the projection **248** on the plate **243**) is opposite the ear **247** and thus obstructs counter-clockwise sensing movement of the lever **238**, the link **269** and the stud **267** remain stationary, and as a result the arm **277** remains in effective position, as here shown, in which the control surface **278** obstructs counter-clockwise movement of the pitman **223**, and consequently said pitman is retained in the position shown in Fig. 6, in which the enlarged portion of the slot **232** is in coacting relation with the stud **233**, and under such conditions no printing movement is imparted to the printing mechanism.

Mechanism is provided for controlling the movement of pitman **223** in such manner that when the impression roll holder drive segment **221** and the pitman **223** are in the "down" position, the next substantially vertical or "printing" movement of said pitman will be upwardly, and conversely, so that, when the drive segment **221** and the pitman **223** are in the "up" position, the next substantially vertical or "printing" movement of said pitman will be downwardly.

Mounted on stud **265** outwardly of arms **264**, **268**, and **277** is an arm **290** (Fig. 6), which is urged in a counter-clockwise direction by a spring **291** connected to the arm **290** and to the machine frame **30**. Arm **290** is formed to include on its periphery a surface **292** and a surface **293**, which is further from the center of rotation of arm **290** than is the surface **292**, and which is separated from surface **292** by a projection **294**. A stud **295** is fast in an extension **296** of arm **290** and is engaged with a slot in the lower end of a link **297**. A second slot in link **297**, at its upper end, engages a stud **298** fast in the impression roll holder drive segment **221**. Link **297** is urged upwardly as viewed in Fig. 6 by a spring **299**, which is connected to said link and to the machine frame **30**.

Spring **299** is somewhat stronger than spring **291**, and therefore, when segment **221** is in its "down" position as shown in Fig. 6, the lower end of the upper slot in the link **297** will be urged into engagement with stud **298** by spring **299**. Stud **295** will be urged into engagement with the lower end of the lower slot in link **297** by spring **291**, thus positioning surface **293** in the path of movement of ear **272**. Therefore if, during a machine operation, sensing lever **238** is permitted by control plates **243** and **244** to rotate in a clockwise sensing movement, thereby freeing the enlarged bottom end of pitman **223** for movement to the right as viewed in Fig. 6, and if movement of ear **272** on arm **273** is not otherwise obstructed, the arm **273** and the pitman **223** will move counter-clockwise to the right until ear **272** contacts surface **293**. This extent of movement will position pitman **223** so that surface **234** is in the path of movement of stud **233**. Subsequent counter-clockwise rotation of lever **226** will impart an upward movement to the pitman **223**, thus shifting the pitman and the segment **221** from "down" position to "up" position and effecting a printing operation on the slip ticket **170** (Fig. 10) inserted into the machine.

Conversely, when segment **221** is in its "up" position (not shown), the link **297** and the spring **291** will position the arm **290** so that surface **292** is in the path of movement of ear **272**. Then if, during the machine operation, the arm **273** and the pitman **223** move counter-clockwise to the right until ear **272** contacts surface **292**, pitman **223** will be positioned so that surface **235** is in the path of movement of stud **233**. Subsequent clockwise rotation of lever **226** will impart a downward movement to the pitman **223**, thus shifting the pitman and the segment **221** from "up" position to "down" position and effecting a printing operation on the slip or ticket **170** inserted into the machine.

Applications

As has been previously stated, the manner in which the slip printing mechanism functions may be varied to suit the requirements of the business system to which the machine is being applied, by properly arranging the high and low surfaces on the control plates **243** and **244**. Similarly the manner in which the consecutive numbering mechanism functions may be varied to meet particular requirements by properly arranging the high and low surfaces on the selecting plates **130**, **131** and **132**.

One system in which the machine may be used is illustrated by the embodiment of the keyboard shown in Fig. 1 and the slip or ticket **170** shown in Fig. 3, which is in the form of an airline ticket, containing a number of superimposed transfer sheets **171**, **172**, **173**, **174**, and **175** having transfer means therebetween, so that an impression made on the top sheet will be reproduced simultaneously on all of the other sheets. The number of sheets employed varies with the number of separate flights required to go from the point of departure to the destination, one sheet being customarily removed at the beginning of each separate flight.

It is desirable that such a ticket be certified at the time of purchase with data showing the amount paid, the destination, and a number which identifies the particular transaction. It is also desirable that this certification be printed on each of the separate sheets of the ticket, and that it be accomplished by a machine which will simultaneously make a permanent record of the transaction on its detail strip **40**.

Heretofore difficulty has been experienced in the machine certification of tickets of the type shown in Fig. 3, containing a plurality of sheets, since no suitable machine existed having a printing mechanism capable of making clear impressions through so many sheets. This problem has been overcome by the present printing mechanism, which employs a plurality of printing rolls, one for each printing station, each of which traverses its respective printing station under pressure to cause the desired impression to be made on the slip or ticket **170**, while the transaction is simultaneously recorded on the machine detail strip **40**.

In use it is contemplated that the various item amounts making up the total price of the ticket will be entered into the machine by successive operations by use of the amount keys **21** and the department keys **23**, which may be used to indicate the identity of the clerk operating the machine, according to a pre-arranged system. During these itemizing operations, the slip or ticket **170** is not inserted into the machine. Upon completion of the itemizing operations, the slip or ticket **170** is inserted into the machine, and either the "Cash Total" transaction key **22** or one of the transaction keys **22** bearing Roman numerals I, II, III or IV is depressed and the machine operated. Any of the above-designated transaction keys **22** initiates a total taking operation. The keys **22** bearing the Roman numerals may be used to indicate different destinations or other information, according to a pre-arranged system, and in this event, the "Cash Total" key is used if the actual destination is one not represented in the system by any of the four Roman numerals.

In the event that the total price of the ticket is deter-

mined by a single item, the appropriate amount keys **21**, the "One Item Cash" transaction key **22**, and the appropriate department key **23** may all be depressed, the ticket **170** inserted into the machine, and the machine operated, thus completing the transaction in a single operation, if desired. However it should be noted that if the "One Item Cash" key is employed, the Roman numeral keys **22** cannot be used in the same operation, and therefore no Roman numeral indicating the destination will appear in the certification.

An example of the data printed on a ticket in a typical certification is shown in Fig. 3. The number "1095" is an identifying number for the transaction which is printed by the type wheels **90**, and this same number also appears on the corresponding itemizing entries on the detail strip **40**. The amount shown on the same line as the identifying number is printed by type wheels **37** and represents the total price of the ticket, while the Roman numeral II turned on its side indicates the destination of the ticket holder. The legend "Your Receipt—Thank You," is printed by the electro **176**, while the date appearing below it is printed by the date type wheels **177**.

It will be recalled that, in the present embodiment, operation of the machine with any of the "Cash Total," "One Item Cash," I, II, III, or IV transaction keys **22** depressed, and with the control slide **25** in Register position, causes the consecutive numbering mechanism to add one unit to the number which will be printed by the consecutive numbering type wheels in the next following printing operation, thus providing a different identifying number for each ticket certification, which is accomplished in the manner described above.

The "Repeat" transaction key **23** in the present embodiment is depressed in a machine operation in which a sub-total is desired of a number of items entered in previous machine operations. Such a sub-total operation does not clear the previously entered items from the machine's item totalizer. Therefore, the same number may be printed as an amount as many times as desired by successive machine operations in which the "Repeat" key **23** is depressed. However, it will be recalled that in the present embodiment, such operations do not actuate the consecutive numbering mechanism to add to the identifying number printed, and the same identifying number will therefore appear in such succeeding operations.

The application described above is, of course, only one of many to which the present machine may be adapted. In Fig. 2 is shown a portion of a keyboard with which the present machine might be provided for use in establishments such as a drug store or a grocery store. Such a keyboard differs from the keyboard of Fig. 1 only in the transaction keys, which are designated as **300** in Fig. 2. A "No Sale" transaction key has been added, the "Repeat" key has been retitled "Sub-Total," and "Tax," "Received on Account," "Charge," and "Paid Out" keys have been substituted for the Roman numeral keys I, II, III, and IV, respectively. The functions of these four keys may be varied as desired by changes in the machine such as are well known in the art.

In the embodiment of the machine in which the keyboard of Fig. 2 would be used, the machine may be provided with visible indicators and a drawer cabinet having a cash drawer, if desired. As has been previously stated, these constructions are not illustrated herein but are fully disclosed in the above-cited application Serial No. 306,762. Such a machine would, of course, be of particular value where establishments of the type mentioned above employ a slip or ticket in the form of multiple sheets having transfer means, whereby one of the sheets may be given to the customer as a receipt and a second sheet may be retained by the clerk or some other person as a record of the transaction which is in addition to the record printed on the detail strip **40**.

While the forms of mechanism herein shown and described are admirably suited to fulfill the objects primarily stated, it is to be understood that it is not intended to confine the invention to the forms or embodiments herein disclosed, for it is susceptible of embodiment in various other forms, all coming within the scope and spirit of the invention.

What is claimed is:

1. In a machine of the class described, constructed and arranged to perform various types of operations, and to print data relating to said operations on record material, the combination of a type number; a platen coacting with the type member to print data on the record material; a rockable holder for the platen; rotatable means connected to the holder and rotatable back and forth to rock the holder and the platen also back and forth from one position to another position and vice versa, to cause said platen to traverse the type member each time it moves from one position to the other, to print data on the record material; operating means for the rotatable means; positionable means connected to the rotatable means and having a first operating surface coacting with the operating means to rock said rotatable means back, and having a second operating surface coacting with said operating means to rock said rotatable means forth; and means connected to the rotatable means and coacting with the positionable means to position the operating surfaces in proper relationship to the operating means to insure that the platen holder and the platen are rocked in the proper direction.

2. In a machine of the class described, the combination of a type member; an impression platen holder; an impression platen resiliently mounted in the impression platen holder and arranged to coact with the type member to print records on record material; supporting means operatively connected to the impression platen holder for supporting the holder and imparting an arcuate movement thereto whereby the resiliently mounted platen is brought into printing relation with the type member and traverses the type member; driven means associated with said supporting means; rotatable means constructed and arranged to coact with said driven means to impart rotational movement to said driven means, and hence to said supporting means, said rotatable means being operable between two positions to cause the impression platen to traverse the type member in either of two directions to effect a printing operation on the record material in either direction of movement; operating means for operating said rotatable means; and means controlled by the position of the rotatable means for controlling the direction of operation of the rotatable means by the operating means.

3. In a machine of the class described, constructed and arranged to perform various types of operations and to print data relating to said operations upon record material, the combination of a type member; a platen constructed and arranged to traverse the type member and the record material once each machine operation to print data on said record material; a rockable holder for the platen; rotatable means connected to the holder and rockable in one direction to rock the holder and the platen from one position to another position, to cause said platen to traverse the type member and the record material to print data on said record material, said rotatable means rockable in the reverse direction to rock said holder and said platen from said another position to said one position to cause said platen to traverse the type member and the record material to print data on said record material; operating means for the rotatable means, said operating means constructed and arranged to rock said rotatable means in either said one direction or said reverse direction during an operation of the machine; positionable means connected to the rotatable means and having a first operating surface coacting with the operating means to rock the holder and the platen to said another position, said positionable means having a sec-

ond operating surface coacting with said operating means to rock said holder and said platen to said one position; yieldable means effective each machine operation to move either operating surface into coacting relationship with the operating means; and stop means connected to and positionable by the rotatable means, and engageable by the positionable means to locate the first operating surface in coacting relationship with the operating means when the holder and the platen are in said one position, and to locate the second operating surface in coacting relationship with said operating means when said holder and said platen are in said another position to insure that the platen traverses the type member and the record material only once during an operation of the machine to prevent blurring the data printed on said record material.

4. In a machine of the class described, constructed and arranged to perform various types of operations, said machine having a plurality of manually operable control elements to control operation thereof, and control members positionable under control of said control elements, the combination of a type member; an impression platen holder; an impression platen mounted in the impression platen holder and arranged to coact with the type member to print records on record material; rotatable means for supporting the impression platen holder for movement back and forth between two end positions to cause the impression platen to coact with the type member to effect a printing operation on the record material in either direction of movement; means to retain the platen holder in either end position; operating means for said rotatable means; means including a pitman to connect the rotatable means to the operating means and movable in either of two directions, said pitman operatively connected with the rotatable means and connectable to the operating means, but normally disconnected therefrom; means connected to the pitman and coacting with the control members to selectively connect said pitman and the operating means to operate said rotatable means in certain operations; and means controlled by the position of the rotatable means for controlling the direction of operation of the pitman.

5. In a machine of the class described, constructed and arranged to perform various types of operations, said machine having a plurality of manually operable control elements to control operation thereof, and control members positionable under control of said control elements, the combination of a type member; an impression platen holder; an impression platen mounted in the impression platen holder and arranged to coact with the type member to print records on record material; rotatable means associated with the impression platen holder and movable back and forth between two positions to cause the impression platen to coact with the type member to effect a printing operation on the record material in either direction of movement; operating means for said rotatable means; means including a pitman to connect the rotatable means to the operating means, and movable in either of two directions to correspondingly move the rotatable means, said pitman being operatively connected to the rotatable means and constructed and arranged to coact with the operating means to operate said rotatable means, but normally retained out of coacting relationship with said operating means; means connected to the pitman and coacting with the control members to selectively connect said pitman and the operating means to operate said rotatable means in certain operations; means controlled by the position of the rotatable means for controlling the direction of operation of the pitman; means to sense for the presence of record material in printing position; and means controlled by the record material sensing means to obstruct the movement of the pitman into coacting relationship with the operating means to prevent operation of the rotatable means when the record material is not in printing position.

6. In a machine of the class described, the combination of a plurality of type members; a plurality of impression platen units, each unit including a yoke, a shaft mounted in the yoke, and a platen rotatably mounted on the shaft, each platen being arranged to coact with a type member once each machine operation to print data on record material; an impression platen unit holder; means for mounting the platen units in the platen unit holder; rockable means for supporting the impression platen unit holder for movement back and forth between two end positions to cause the impression platens to coact with the type members to effect a printing operation on the record material in either direction of movement; means to retain the platen holder in either end position; rotatable means connected to the rockable means and rockable back and forth in unison therewith; operating means for the rotatable means, said operating means having a back-and-forth movement each machine operation; positionable means connected to the rotatable means and connectable to the operating means during either its back or forth movement to impart one printing movement to the rotatable means, the rockable means, the platen holder, and the platens, each machine operation, to prevent blurring the data printed on the record material; and means connected to the rotatable means and positionable thereby to control the positioning of the positionable means in relation to the operating means, to insure that only one rocking movement is imparted to said rotatable means, the rockable means, the platen holder, and the platens each machine operation.

7. In a machine of the class described, the combination of a type member; an impression platen holder; an impression platen mounted in the impression platen holder and arranged to coact with the type member to print records on record material; rotatable means for mounting the impression platen holder for movement in opposite directions between two positions to cause the impression platen to coact with the type member to effect a printing operation on the record material in either direction of movement; operating means for said rotatable means arranged to partake of oscillating movement during machine operation; means including a pitman to connect the rotatable means to the operating means and movable in either of two directions to correspondingly move the rotatable means, and having first and second operating surfaces, constructed and arranged to coact with the operating means in different directions of its oscillating movement; an arm connected to said pitman; and a member connected to said rotatable means and having first and second blocking surfaces thereon; said member being arranged to be positioned by said rotatable means to selectively place said first or said second blocking surface in the path of movement of said arm, according to the position of said rotatable means; whereby when said arm coacts with said first blocking surface of said member, the first of said operating surfaces on said pitman will be positioned to coact with the operating means to move said pitman in one direction, and when said arm coacts with the second said blocking surface of said member, the second of said operating surfaces on said pitman will be positioned to coact with the operating means to move said pitman in another direction.

8. In a machine of the class described, the combination of a type member; an impression platen holder; an impression platen mounted in the impression platen holder and arranged to coact with the type member to print records on record material; a pair of forward supporting arms pivotally connected to said holder; a forward shaft on which said forward arms are mounted for swinging movement; a pair of rear supporting arms pivotally connected to said holder; a rear shaft to which said rear arms are secured; a pinion secured to said rear shaft; a segment mounted for rotational movement and having teeth which mesh with said pinion; means for driving said segment in either of two directions of rotation;

and means for retaining said segment at the limit of its movement in either direction, whereby a printing operation is effected on the record material by the coaction of the platen and the type member upon rotational movement of said segment in either direction.

9. In a machine of the class described, the combination of a type member; an impression platen holder; an impression platen mounted in the impression platen holder and arranged to coact with the type member to print records on record material; a pair of forward supporting arms pivotally connected to said holders; a forward shaft on which said forward arms are mounted for swinging movement; a pair of rear supporting arms pivotally connected to said holder; a rear shaft to which said rear arms are secured; a pinion secured to said rear shaft; a segment mounted for rotational movement and having teeth which mesh with said pinion; means for driving said segment in either of two directions of rotation; means for retaining said segment at the limit of its movement in either direction; and means controlled by the position of said segment for controlling the direction of operation of said segment by the driving means, whereby a

printing operation is effected on the record material by the coaction of the platen and the type member upon rotational movement of said segment in either direction.

References Cited in the file of this patent

UNITED STATES PATENTS

1,115,626	Von Pein	Nov. 3, 1914
1,801,592	Dugdale	Apr. 21, 1931
2,039,072	Dugdale	Apr. 28, 1936
2,043,600	Ward	June 9, 1936
2,104,863	Hueber	Jan. 11, 1938
2,119,684	Paden	June 7, 1938
2,176,371	Wahl	Oct. 17, 1939
2,260,970	Elder	Oct. 28, 1941
2,295,748	Moore	Sept. 15, 1942
2,349,660	Hughes	May 23, 1944
2,606,494	Vogt	Aug. 12, 1952
2,647,458	Goodbar	Aug. 4, 1953
2,708,498	Werner	May 17, 1955
2,775,936	Curtis	Jan. 1, 1957
2,795,186	Bach	June 11, 1957