Aug. 23, 1960 M. S. LIEBERMAN 2,949,642

METHOD OF ASSEMBLING A MOLDED CABLE CONNECTOR

Filed March 14, 1957

3 Sheets-Sheet 1

FIG.1.

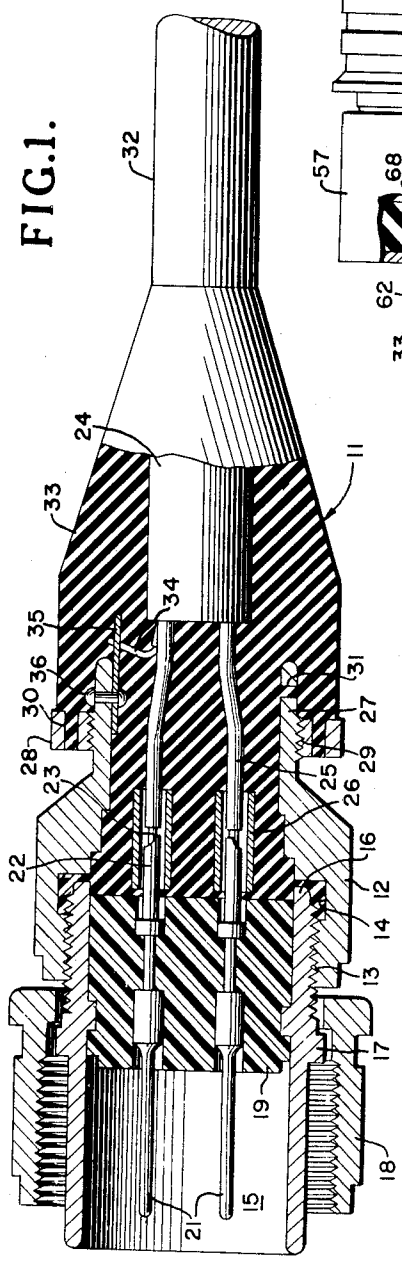

FIG.2.

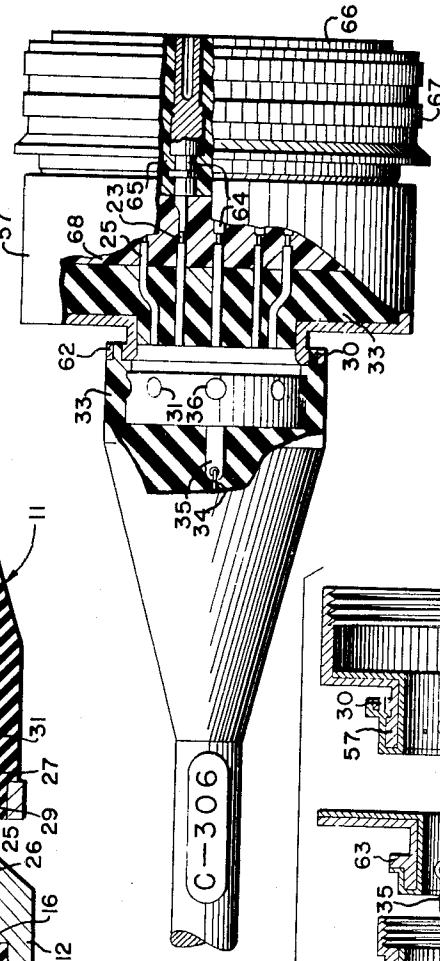

FIG.6.

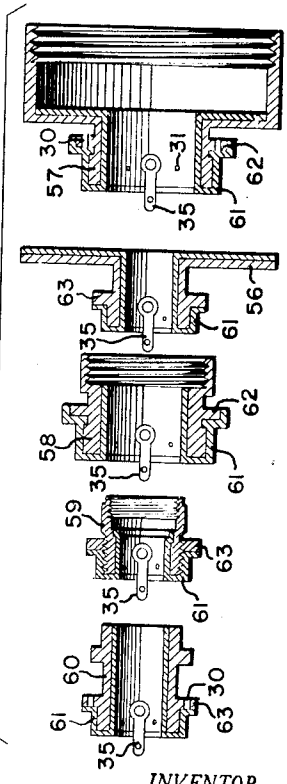

INVENTOR.
MORRIS S. LIEBERMAN
BY

ATTYS

Aug. 23, 1960 M. S. LIEBERMAN 2,949,642

METHOD OF ASSEMBLING A MOLDED CABLE CONNECTOR

Filed March 14, 1957 3 Sheets-Sheet 2

FIG.5.

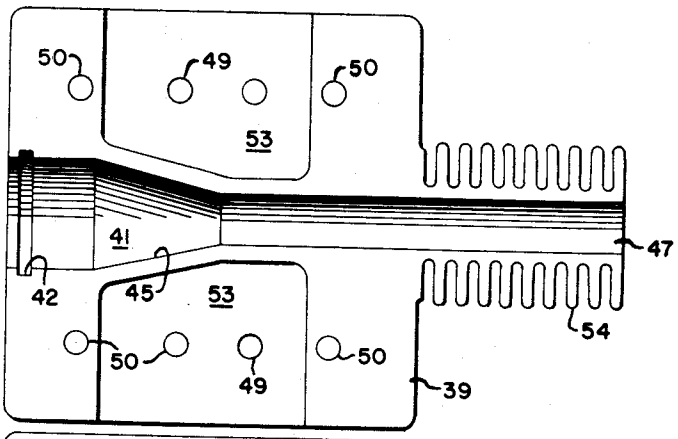

FIG.4.

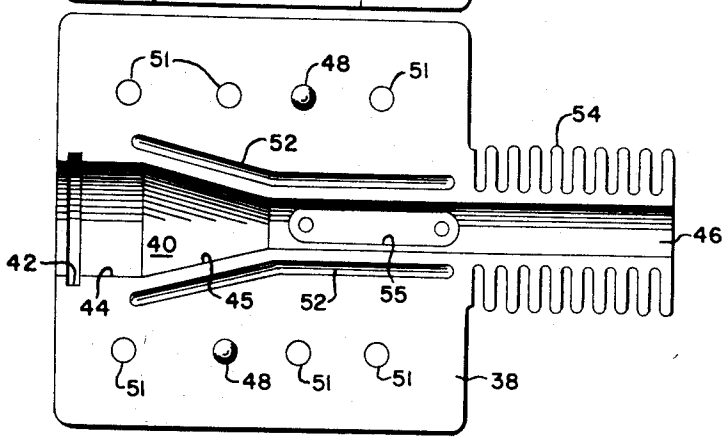

FIG.3.

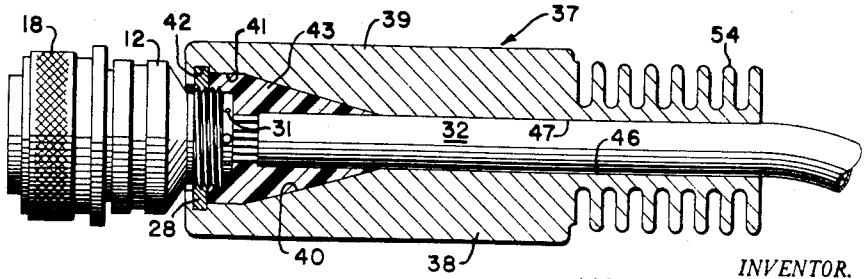

INVENTOR.
MORRIS S. LIEBERMAN
BY
W. O. Lauenberg
ATTYS

Aug. 23, 1960 M. S. LIEBERMAN 2,949,642

METHOD OF ASSEMBLING A MOLDED CABLE CONNECTOR

Filed March 14, 1957 3 Sheets-Sheet 3

FIG.7.

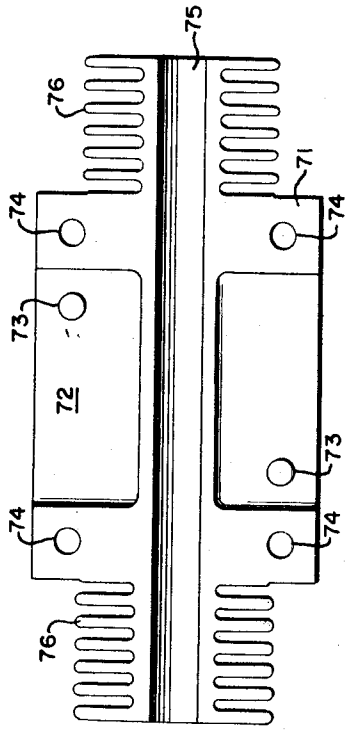

FIG.8.

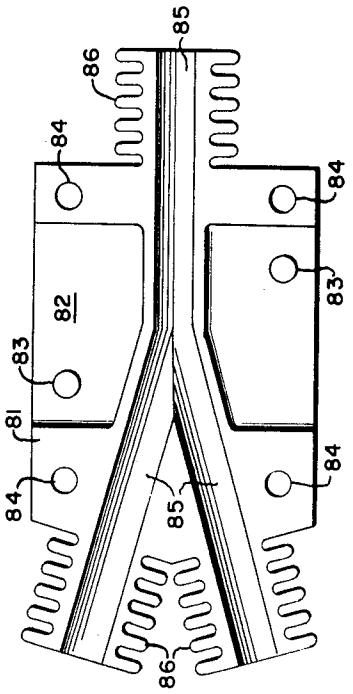

FIG.9.

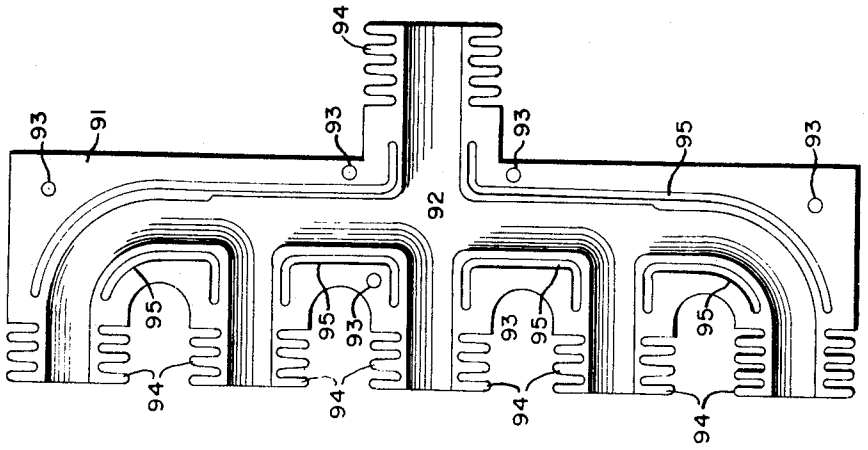

INVENTOR.
MORRIS S. LIEBERMAN
BY

ATTYS

United States Patent Office 2,949,642 Patented Aug. 23, 1960

2,949,642

METHOD OF ASSEMBLING A MOLDED CABLE CONNECTOR

Morris S. Lieberman, Silver Spring, Md., assignor to the United States of America as represented by the Secretary of the Navy

Filed Mar. 14, 1957, Ser. No. 646,180

1 Claim. (Cl. 18—59)

(Granted under Title 35, U.S. Code (1952), sec. 266)

The invention described herein may be manufactured and used by or for the Government of the United States of America for governmental purposes without the payment of any royalties thereon or therefor.

The present invention relates to a method of making molded cable assemblies or connectors. More particularly the invention relates to new and improved moisture-proof cable assemblies molded with a plastic molding material.

In checking components having high impedance circuits for various electrical factors such, for example, as electrical leakage, experience has shown that electrical test equipment used for the purpose or checking the high impedance circuit is subject to serious deterioration and loss of accuracy due to humidity and other moisture problems. In some cases, equipment which is perfectly good on one day may, on the next, be completely worthless or require several hours of heating or "cooking" to make it usable. Cable assemblies, whether they be for use with test equipment or actually form part of the component, if left lying about exposed to the atmosphere, are always subject to becoming unusable because of the entry of moisture therein. To avoid this difficulty, it is desirable to protect the equipment and its associated test cables from the adverse effects of moisture. To this end, it has been proposed that insulating material in a molten state be injected under pressure into a metal coupling or backshell encircling the end of a wire cable and containing the contacts to which the wires of the cables are connected, the backshell being provided with a spew-hole to indicate when it is full. In another prior art cable connector, insulating inserts carrying the cable contacts are disposed in metal casings and are sealed therein by the use of gaskets and threaded retaining rings.

According to the present invention, the end of the cable and a metal backshell or adapter connected thereto are encased in a plastic molding material molded thereabout and integrally bonded to the plastic covering of the rest of the cable, thereby providing a moistureproof cable assembly, which may be visually inspected readily for any air holes and which does away with the need for numerous gaskets and retaining rings. The plastic material may be of the putty type and is packed into the backshell and between and around the wire ends of the cable, after which the packed cable assembly is placed in a suitable mold for the molding of the plastic material. Each mold is comprised of a pair of mold halves, each mold half being provided with a semicircular channel or groove. The semicircular channels or grooves are adapted to receive a molding or adapter ring of suitable thickness and diameter, whereby the pair of mold halves may be used to mold cable assemblies with different-sized metal backshells, each of which is provided with a molding ring of proper thickness and external diameter but the internal diameter of which varies to fit the backshell being molded. Thus, each pair of mold halves can effectively mold and seal a plurality of backshells ranging in size to the end

that a few sets of pairs of mold halves are all that are needed to mold cable assemblies with backshells of various desired sizes. For example, by choosing rings of suitable general sizes, as many as seventy (70) different-sized backshells were adapted to be molded by as few as ten (10) sets of molds.

An object of the present invention is the provision of a novel and improved method of forming moisture proof cable assemblies which, in general, consists of molding plastic material in a solid mass bonded to the cover of a cable having a plastic tubing cover and to a metal backshell connected to the cable.

Other objects and many of the attendant advantages of this invention will be readily appreciated as the same becomes better understood by reference to the following detailed description when considered in connection with the accompanying drawings in which like reference numerals designate like parts throughout the figures thereof and wherein:

Fig. 1 is a fragmentary view, in section, of one embodiment of a molded cable connector assembly of this invention;

Fig. 2 is a fragmentary view, in section, of another form of molded cable connector assembly;

Fig. 3 is an elevational view, in section, wherein a cable connector and cable end are shown cooperatively related to a mold and the placement of molding material is illustrated;

Fig. 4 is a plan view of a mold half and illustrates some of the structural features thereof;

Fig. 5 is a plan view of a mold half complementary to the mold half of Fig. 4 and illustrates structural details;

Fig. 6 is a view showing an exemplary group of different-sized connector backshells or adapters, each of which is provided with a molding or adapter ring for use with a mold, the backshells or adapters being shown in section;

Fig. 7 is a plan view of a mold half used for splicing or integrally bonding the plastic tubing cover of a single cable, it being understood that a complementary mold half is also used to effect the aforesaid molding;

Fig. 8 is a plan view of a mold half used in splicing or bonding together the plastic tubing covers of a forked or Y branch cable; and

Fig. 9 is a mold half used in splicing or integrally bonding the covers of a multiple branch cable.

Referring now to the drawings, wherein like reference numerals designate like or corresponding parts throughout the several views, there is shown in Fig. 1, which illustrates one embodiment of the invention, a molded cable connector assembly generally designated by numeral **11**. Assembly **11** comprises a metal backshell or adapter **12** which is internally threaded as at **13** and has formed therein an annular recess **14**. Threadedly connected to said threaded portion **13** of the backshell or adapter is a tubular member or connector shell **15** which has an annular projection **16** extending into the annular recess **14** in the backshell. The connector shell or tubular member **15** is formed with an external annular projection **17** which is engaged by a coupling element **18** surrounding the connector shell, as will be understood by those skilled in the art.

Within the connector shell **15** is an insert **19** of suitable insulating material which is retained in the connector shell and is sealed thereto in any suitable manner, for example, by molding or cementing. The insert carries prong contacts or terminals **21**, each such contact or terminal having a portion thereof imbedded in said insulating material of the insert **19** and in sealed engagement therewith.

Each contact **21** has a connecting element **22** extend-

ing into the backshell 12, each such element having a sleeve-like portion adapted to receive therein an end of one of the wires 23 of a cable 24. Each wire end is electrically connected to its respective connecting element by suitable means, such as solder, or the like. Each of the wires 23 of the cable 24 is provided with a flexible covering 25 composed of a suitable insulating material such, for example, as tetrafluoroethylene, also known as Teflon. Covering 25 terminates adjacent its respective connecting element and the material thereof is very suitable for the purpose because it does not deform due to heat and does not bond to the molding material described later. Also, if desired, the adjacent ends of each wire end and its respective connecting element may be surrounded by insulation sleeving 26 of suitable material such, for example, as glass-fiber, silicone rubber coated.

The backshell 12 is formed with a reduced portion 27 and upon said reduced portion there is carried a molding or adapter ring 28 which may be threadedly connected thereto as at 29, or formed integrally therewith, as desired. The molding or adapter ring 28 is provided with a plurality of holes or openings 30 as shown in Fig. 1. Additionally, adjacent the free end of the backshell 27 a series of openings or holes 31 are drilled or otherwise formed therein.

For moistureproofing and further insulating the wire ends and respective connecting elements, the cable is suitably covered with a flexible moistureproof material, such as plastic tubing 32, and a suitable molding material 33 is molded between and around the connections, the material also being bonded to the backshell or adapter 12 and vulcanized or bonded integrally to the plastic tubing cover of the cable.

A special formulation of vinyl chloride, known as Vinyl Chloride 4125 manufactured by United Chromium Corporation of New York, New York, has been successfully used and is available in liquid or putty form. Either form is suitable for molding cable assemblies; the tubing was extruded from the liquid material, while the material used for molding was in putty form although the liquid material could be used, if desired. No difficulty was involved in vulcanizing or bonding the putty type material to tubing made from liquid material; the resulting product being homogeneous. Vinyl Chloride 4125, once molded into a cable, is flexible from 200° F. to −60° F. and in its raw or uncured state has an electrical resistance ranging from 50 to 80 megohms, while in its cured state, the resistance varies from 2000 to 7000 megohms.

The molding material, in its uncured state, is packed or forced into the backshell against the back of insulating insert 19 and around the wire connections, the putty form of the material being used for this purpose. During curing, the molding material flows in between and around the connections and into the annular recess 14 formed in the backshell. Putty type molding material is also packed or forced into a mold which is adapted to encase the reduced portion 27 of the back backshell, ring 28 and the adjacent cable end, in order that the material may be molded thereabout and a moistureproof connection formed. During such molding process, the molding material is cured and bonds with the cable covering and flows into holes or openings 30 and 31 in the ring and backshell respectively, thereby, in effect, forming fingers of material extending into said holes or openings. These fingers of material act to grip and lock the ring and backshell to the material, which action, coupled with the bonding of the material to the cable covering and the surfaces of the backshell in contact with the material, makes for a rugged moistureproof connection. It is being understood, of course, that the surfaces of the backshell or adapter are precoated with an adhesive in order that the molding material will effectively adhere and bond thereto.

For the purpose of providing a ground wire 34, where necessary, a lug 35 may be secured to the backshell, as by a rivet 36, or the like, and the ground wire connected thereto. Additionally, the ground wire may serve to prevent undue strain which could result in harmful elongation of the cable, the ground or strain wire 34 for this purpose being made of steel strands which provide for flexibility as well as strength.

For a better understanding of the molding process, reference may be had to Fig. 3, wherein a cable assembly of the type shown in Fig. 1 is illustrated encased in a mold generally designated by numeral 37, the mold being made up of a pair of complementary mold halves 38 and 39. Mold half 38 is fashioned with a concavity or mold cavity 40, mold half 39 being similarly formed with a concavity or mold cavity 41 complementary to cavity 40. Each mold half is provided with a semicircular channel or groove 42 which grooves, when the mold haves are mated, form a circular channel or groove adapted to receive the molding or adapter ring 28 on the backshell 12. Raw or uncured molding material 43 of the putty type, is suitably packed into cavities 40 and 41 as well as into the backshell between and around the ends of the wires. It will be appreciated that when the mold halves have been mated with ring 28 received in channels or grooves 42, the ring constitutes a wall preventing flow of molding material out of the mold cavities.

Turning now to Figs. 4 and 5 for a more specific description of the mold, there is shown in Fig. 4 a mold half 38 formed with a concavity 40 having a semi-cylindrical surface 44 from which extends a tapering surface 45, the latter merging with the surface of a semicylindrical concavity or cavity of reduced diameter 46. Adjacent one end of the mold, a semicircular channel or groove 42 is formed in the mold coaxial with the aforenamed concavities, said channel or groove being of a suitable diameter and width for snugly receiving one-half of ring 28.

The mold half 39 shown in Fig. 5 is formed with concavities 41 and 47, complementary to concavities 40 and 46, respectively. Mold half 39 is provided with a semicircular channel or groove 42 and together with channel or groove 42 of mold half 38 of Fig. 4 forms a circular channel or groove adapted to receive ring 28.

In order that the concavities and channels or grooves of the mold halves may be properly mated, mold half 38 may be provided with mating pins 48 which are adapted to be received in mating openings or apertures 49 formed in mold half 39. Mold half 39 may be provided with through openings or holes 50 which receive bolts (not shown) adapted to be screwed into threaded openings 41 in mold half 38 for tightly holding the mold halves together.

Mold half 38 is formed with a pair of elongated channels 52 at the sides of the tapering surface 45 of concavity 40 and the sides of the semicylindrical concavity 46 and generally parallel thereto. Mold half 39 is formed with a pair of depressions 53 which, in the mated relation of the mold halves, communicate with elongated channels 52 respectively. Also, the mold halves are so formed that when they are held together in mated relation, a slight gap or slit exists between the sides of the concavities and the adjacent edges of the channels 52 and depressions 53, which slit or gap is for the purpose of providing an outlet for molding material in excess to the capacity of the concavities and overflowing therefrom during molding and curing.

Each mold half is provided with a portion having cooling fins 54, the fin portions serving to dissipate heat and establish a gradual temperature gradient along the plastic tubing cover of the cable surrounded by the fin portions, in order that the plastic tubing not flow and yet be effectively bonded to the molding material, it being understood that the cable is received in the semicylindrical concavities 46 and 47.

For the purpose of identifying the cable assemblies, mold half **38** may be formed with an elongated recess or slot **55** in semicylindrical concavity **46**, which recess or slot is adapted to receive an insert plate having identifying characters and numerals engraved therein. The slot is further adapted to be packed with molding material whereby the cable assembly may be molded with a raised flat carrying raised identification symbols thereon; see Fig. 2 noting symbols C–306.

The mold halves may be constructed of aluminum and may be anodized for corrosion protection and to provide smooth, non-sticking cavity surfaces.

In Fig. 6, there is shown an exemplary group of connector backshells or adapters **56**, **57**, **58**, **59** and **60**, of different size and shape or type, each backshell or adapter having a coating **61** of suitable adhesive. Backshells **57** and **58**, although of different size, respectively carry thereon a molding or adapter ring **62**, each of the rings being of the same external diameter and equal in thickness but differing in the internal diameter thereof in order to fit the external diameter of the backshell with which the ring is associated.

The external dimensions of a set of rings may be made equal to the dimensions of the semicircular channels or grooves **42** of a pair of mold halves such as those shown in Figs. 4 and 5. By such an arrangement, one mold may be employed to mold connector backshells or adapters of different types provided, of course, each backshell has thereon a molding or adapter ring of proper size to fit snugly into the channels or grooves **42** of the mold.

Thus, a mold formed with channels or grooves adapted to receive molding or adapter rings **63** of backshells or adapters **56**, **59** and **60** could be utilized to mold cables to such backshells or to backshells of other size and shape carrying a ring of the external dimensions of ring **63**.

While backshells **58** and **59** are shown with the ring thereof threaded thereon, it should be clear that such ring could, if desired, be otherwise connected to the backshell, or formed integrally therewith. For example, backshells **56**, **57** and **60** have the ring thereof formed integrally therewith.

Albeit only five forms of connector backshells or adapters are shown in Fig. 6, such showing is illustrative and not limiting, since it is obvious that a considerable number of backshells and adapters, different in size and type, could be formed with or made to carry an adapter ring of the proper size for use with a mold. Moreover, each backshell or adapter could be formed with locking openings **30** and **31** and have a lug **35** secured thereto for a ground or strain wire.

It should therefore be clear that with a few sets of molds formed to accommodate adapter rings in a range of sizes, a considerable number of connector backshells or adapters, different in size and type, could be molded to cables.

For example, a connector backshell or adapter of the type designated by numeral **57** in Fig. 6 is shown molded to a cable in the form of cable assembly illustrated in Fig. 2. This cable assembly is constructed with socket contacts **64**, said contacts being imbedded in an insert **65** of insulating material carried in a connector shell **66** secured to the backshell **57**, the connector shell having associated therewith a coupling **67**, similar in purpose to coupling element **18** in Fig. 1. The socket contacts are electrically connected to wires **23** of the cable by solder, or the like, each wire having a flexible covering **25**. The soldered connections may be surrounded by insulation sleeving **26** (not shown), if desired, and the backshell and adapter may have locking openings **30** and **31** formed therein.

Connector backshells having large longitudinal or lateral dimensions pose the problem that heat applied to the mold during molding of a cable assembly cannot penetrate to the full extent thereof. To solve this problem, the backshell is potted with an organopolysiloxane elastomeric potting compound from the back of the insulating

insert out to a level to which heat from the mold will penetrate. The backshell may be similarly potted with organopolysiloxane elastomeric potting compound for better insulation; especially, where a number of the contacts are shorted. Silastic S–2007 manufactured by Dow Corning Corporation of Midland, Michigan, has proved suitable for this purpose when cured for four hours at 325° F. The remaining space in the backshell is packed with molding material as hereinbefore described.

In the cable assembly illustrated in Fig. 2, the cured silastic potting compound is referenced by numeral **68** and fills the space between the insulating insert **65** and the molded material **33**.

Where it is necessary that a cable be passed through a packing gland, the cable must have a solid section to prevent its collapse. This is accomplished by slitting the plastic tubing cover of the cable and packing raw molding material between and around the wires. This section is then placed in a straight tube type mold and processed through the regular curing cycle. Fig. 7 illustrates one half of a straight tube type mold, the mold half **71** shown in Fig. 7 being that half which is formed with depressions **72**, which are similar in purpose to depressions **53** of mold half **39**. Mold half **71** is provided with mating openings **73** adapted to receive mating pins (not shown) extending from a complementary mold half (not shown), and with openings or through holes **74** adapted to receive bolts (not shown) for tightening and holding the mold halves together. These mold halves are each formed with a semicircular concavity **75** in which the cable is received and are also provided with portions having cooling fins **76**. Depressions **72** cooperate with elongated channels (not shown) at the sides of the semicircular concavity in the complementary mold half (not shown) in the same manner as depressions **53** cooperate with channels **52** in the mold of Figs. 4 and 5.

For molding or vulcanizing the plastic tubing cover of a forked or Y branch cable, use is made of a mold one-half **81** of which is shown in Fig. 8 and which is mated with a complementary mold half (not shown) formed with elongated channels (not shown) cooperatively related to depressions **82** in the mold half **81**. Mold half **81**, too, is provided with mating openings **83** and bolt holes **84**. This mold has semicircular concavities **85** and finned portions **86** for cooling the portion of the cable adjacent the section being molded or vulcanized. The mold half **91** shown in Fig. 9 has semicircular concavities **92** and is for a cable having four branches, it being understood, of course, that the mold could be formed to accommodate more or a lesser number of branches and that the mold would be provided with suitable means **93** for properly mating the mold half with a complementary mold half (not shown) and for retaining or holding the mold halves together in proper relationship. Also, if desired, such mold halves could be provided with finned portions **94** to cool sections thereof and with elongated channels **95** at the sides of concavities **92** for taking care of overflow of any excess molding material.

The molding process will now be described in more detail. The connector backshell to which the cable is to be molded is first cleaned thoroughly with a suitable solvent such as methyl ethyl ketone. A thin coat of a suitable adhesive such, for example, as Unichrome Primer 219–PX, made by United Chromium Corporation of New York, N.Y., is applied by dipping, brushing or spraying, to the backshell and suitably dried. Care should be taken, during coating, that the end of lug **35** is not coated so that a good electrical connection may be made to the ground wire **34**. Such coating is schematically illustrated and referenced by numeral **61** in Fig. 6.

Employing a suitable connector carrying the desired form of contacts and a coated backshell, the contacts

are wired to a cable and insulated, if desired. The backshell of the connector is then packed with vinyl chloride molding material. In the case of the larger backshells and for better insulation, the backshell is first partially packed with silastic potting compound, the compound being cured prior to packing the rest of the way with vinyl chloride molding material. The mold cavities of the mold halves are packed with vinyl chloride molding material and the backshell and cable are placed in one of the mold halves with the adapter ring of the backshell received in the semicircular channel or groove of the mold half. The mold halves are then mated and bolted together and placed in an electric heating press with enough pressure to insure adequate heat transfer.

Before applying heat to the mold, a retaining means is attached to the connector to prevent the insulating insert and the contacts carried thereby from being forced from the connector by the pressures generated within the mold. During heating, the plastic tubing cover of the cable expands and provision must be made to prevent bulging and distortion and it is therefore necessary to support the cable at the point where it extends beyond the mold. During molding, a blower may be directed over the cooling fins of the mold to aid in keeping the tubing sufficiently cool to keep it from flowing and collapsing. The mold is then heated to a temperature of approximately 340° F., the average molding time being about 20 minutes at such temperature. Vinyl chloride can be cured from 300° to 340° F., depending upon the size of the connector and the curing time. The cable and mold, while still in the press, are then allowed to cool gradually to about 100° F., after which time the cable is removed. The cooling time can be reduced by directing a blower over the mold.

Applicant has achieved the objects of the invention by providing moistureproof cable assemblies which are formed by a process of molding moistureproof molding material about a cable connector and the cable end and by providing suitable molds and adapters to carry out the process over a wide range in size of connectors.

Obviously, many modifications and variations of the present invention are possible in light of the above teachings. It is therefore to be understood that the invention may be practiced otherwise than as specifically described.

What is claimed and desired to be secured by Letters Patent of the United States is:

A method of assembling a connector in moistureproof relation to a wire cable comprising the steps of securing an insert carrying contacts electrically connected to the wires of the cable in a metal backshell carrying an external ring near one end which has a multiplicity of longitudinal apertures, said backshell further having a multiplicity of lateral apertures near the same end, packing the interior of the backshell with a molding material to hold the connected wires in position, placing the ring into an annular groove of a mold, packing the interior of the mold with molding material, said molding material engaging the ring and surrounding the end of the cable, curing the molding material sufficiently to cause it to bond with said cable and to flow into said longitudinal and lateral apertures and thereby grip and lock the molded material to said ring and to said backshell, and removing the molded cable assembly from the mold.

References Cited in the file of this patent

UNITED STATES PATENTS

2,385,460	Omansky	Sept. 25, 1945
2,580,668	Franz	Jan. 1, 1952
2,697,855	Brown	Dec. 28, 1954
2,707,803	Thorne	May 10, 1955
2,727,120	Boggs	Dec. 13, 1955
2,732,421	Chapman	Jan. 24, 1956
2,737,543	Irwin et al.	Mar. 6, 1956