US 20040176822A1

(19) United States

(12) Patent Application Publication (10) Pub. No.: US 2004/0176822 A1

Thompson et al. (43) Pub. Date: Sep. 9, 2004

(54) METHOD AND APPARATUS FOR AUTOMATIC IMPLANTABLE MEDICAL LEAD RECOGNITION AND CONFIGURATION

(75) Inventors: **David L. Thompson**, Andover, MN (US); **Steven D. Goedeke**, Forest Lake, MN (US); **Gregory J. Haubrich**, Champlin, MN (US); **Ryan Cobian**, New Brighton, MN (US); **Eric Bonde**, Victoria, MN (US); **John L. Sommer**, Coon Rapids, MN (US); **Jonathan Werder**, Maple Grove, MN (US); **Nels Nerison**, Wyoming, MN (US); **Eric V. Blaha**, Hudson, WI (US)

Correspondence Address:
MEDTRONIC, INC.
710 MEDTRONIC PARKWAY NE
MS-LC340
MINNEAPOLIS, MN 55432-5604 (US)

(73) Assignee: **Medtronic, Inc.**

(21) Appl. No.: **10/713,661**

(22) Filed: **Nov. 14, 2003**

Related U.S. Application Data

(62) Division of application No. 09/907,308, filed on Jul. 17, 2001, now Pat. No. 6,675,049.

Publication Classification

(51) **Int. Cl.**[7] **A61N 1/08**

(52) **U.S. Cl.** **607/60**

(57) **ABSTRACT**

An automated identification and configuration system for use with an implantable medical device (IMD) is disclosed. The system includes a first communication circuit that is attached to, or otherwise carried by, a detachable component associated with the IMD such as a medical lead. The communication circuit stores data such as model numbers, serial numbers, technical data, and/or calibration information that describes the additional component. This information may be transferred by the first communications circuit to a second communications circuit that is external to the additional component. This transferred data can be used to automatically configure the internal circuitry and connection functions of the IMD to properly interface with, and support, the additional component. For example, the data can be used to automatically adjust amplifier gains or other sensor circuitry, or to configure a connector block to properly couple to the component. The data may further be entered into a patient record on an external programmer, or may be transferred to a central storage location to be generally accessible to health care providers. In one embodiment, the first communication circuit is a passive RF transponder. This first communication circuit may include a receiver as well as a transmitter to allow the circuit to programmably receive data at the time of component manufacture.

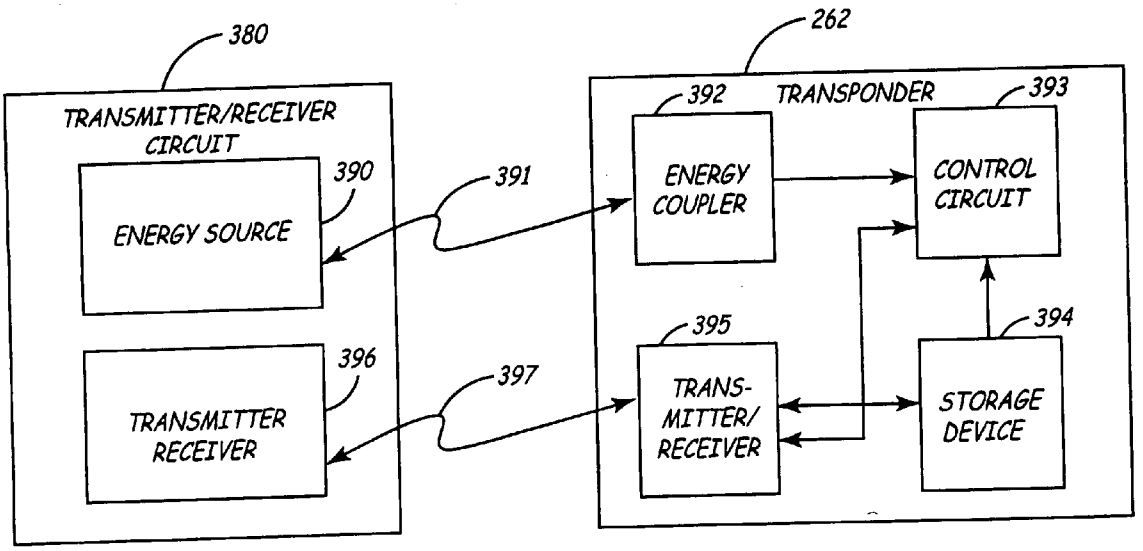

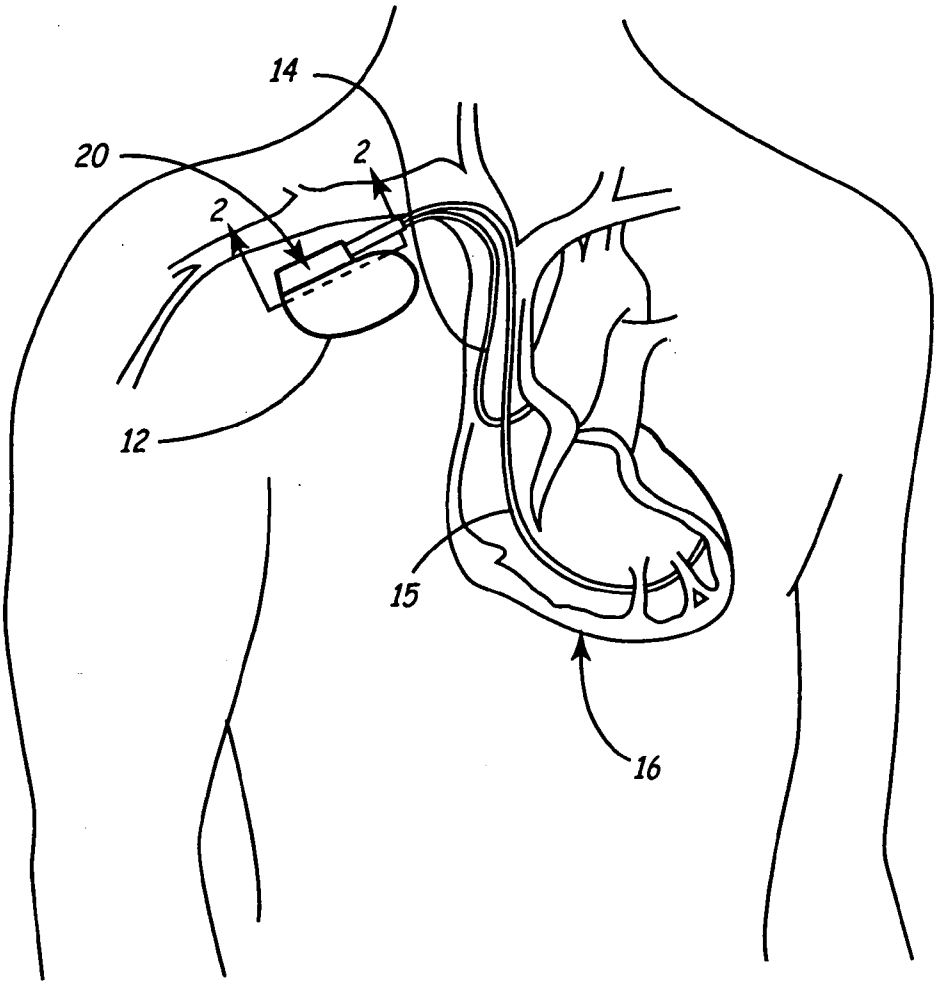

FIGURE 1

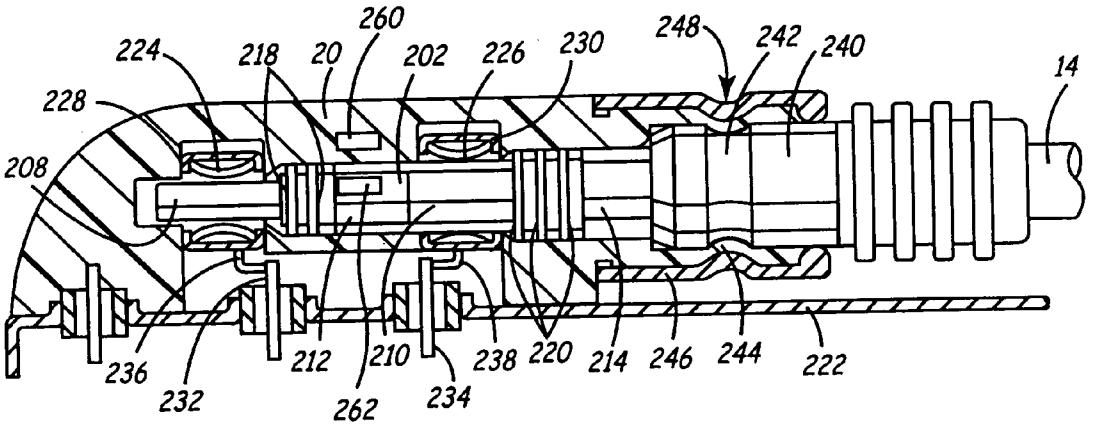
260
224
218
20
202
226
230
248
242
240
14
228
208
236
232
212
262
210
238
234
220
214
246
244
222

FIGURE 2

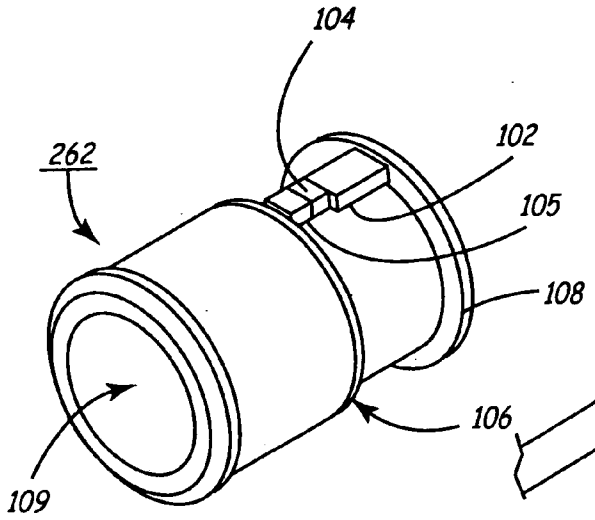

FIGURE 3

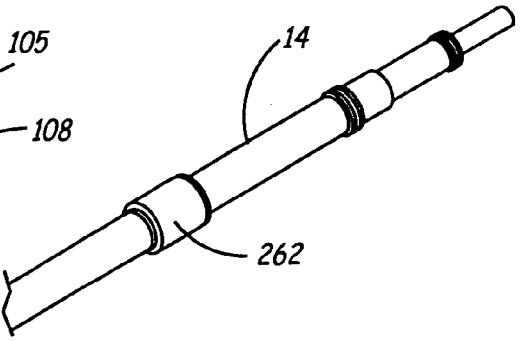

FIGURE 4

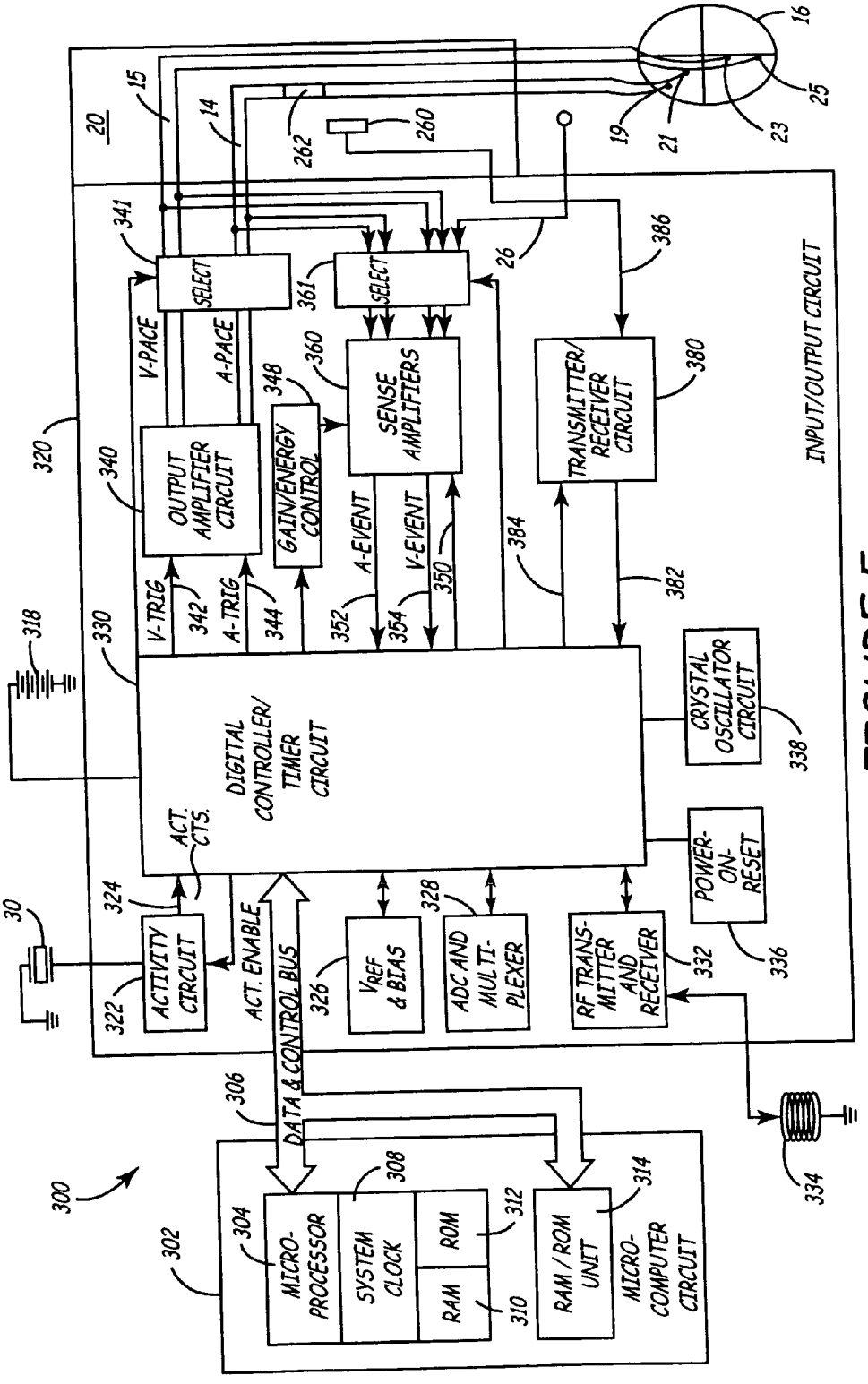
16
25
23
21
19
260
262
14
15
20
341
SELECT
361
SELECT
26
386
V-PACE
A-PACE
348
360
SENSE AMPLIFIERS
TRANSMITTER/ RECEIVER CIRCUIT
380
320
340
OUTPUT AMPLIFIER CIRCUIT
GAIN/ENERGY CONTROL
A-EVENT
V-EVENT
350
384
INPUT/OUTPUT CIRCUIT
318
330
V-TRIG
342
A-TRIG
344
352
354
382
DIGITAL CONTROLLER/ TIMER CIRCUIT
CRYSTAL OSCILLATOR CIRCUIT
338
ACT. CTS.
30
324
POWER-ON-RESET
328
ACTIVITY CIRCUIT
ACT. ENABLE
VREF & BIAS
ADC AND MULTI-PLEXER
RF TRANS-MITTER AND RECEIVER
332
336
322
326
306
DATA & CONTROL BUS
334
300
308
314
302
304
MICRO-PROCESSOR
SYSTEM CLOCK
ROM
RAM
312
310
RAM / ROM UNIT
MICRO-COMPUTER CIRCUIT

FIGURE 5

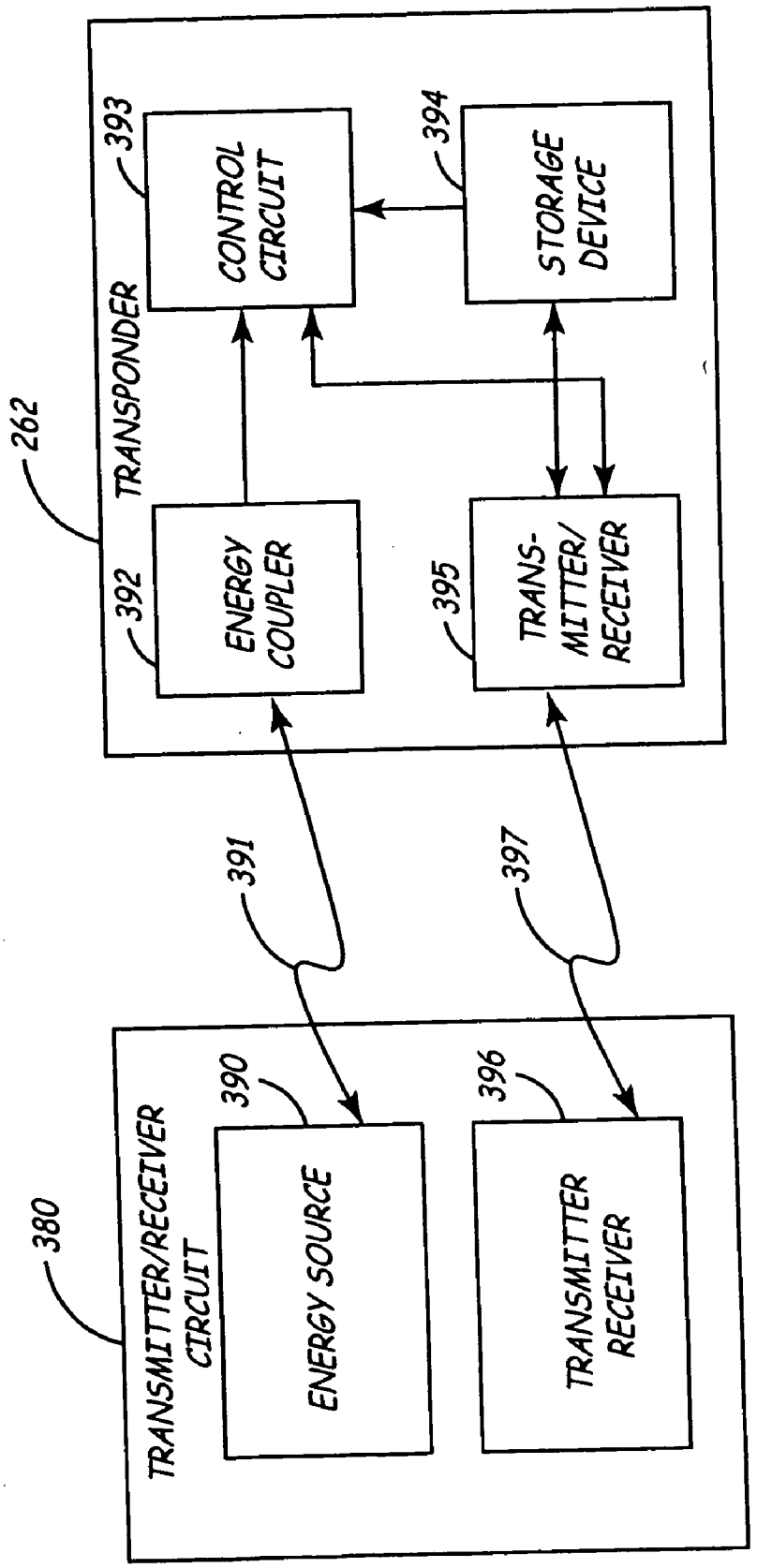
262
TRANSPONDER
393
CONTROL CIRCUIT
394
STORAGE DEVICE
392
ENERGY COUPLER
395
TRANS-MITTER/ RECEIVER
391
397
380
TRANSMITTER/RECEIVER CIRCUIT
390
ENERGY SOURCE
396
TRANSMITTER RECEIVER

FIGURE 6

FIGURE. 7

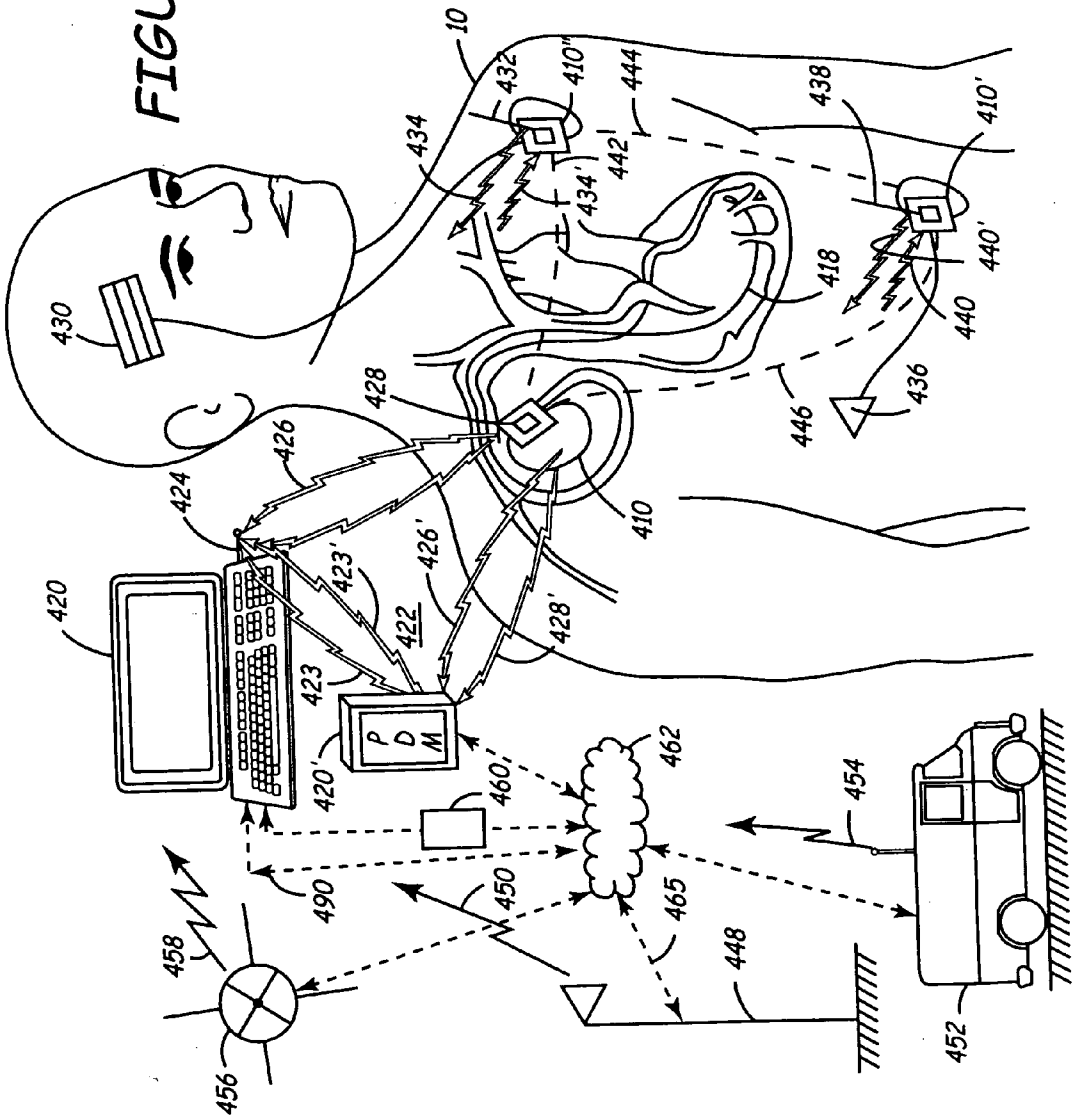
10
410
410'
410"
418
420
420'
422
423
423'
424
426
426'
428
428'
430
432
434
434'
436
438
440
440'
442
444
446
448
450
452
454
456
458
460
462
465
490
P
D
M

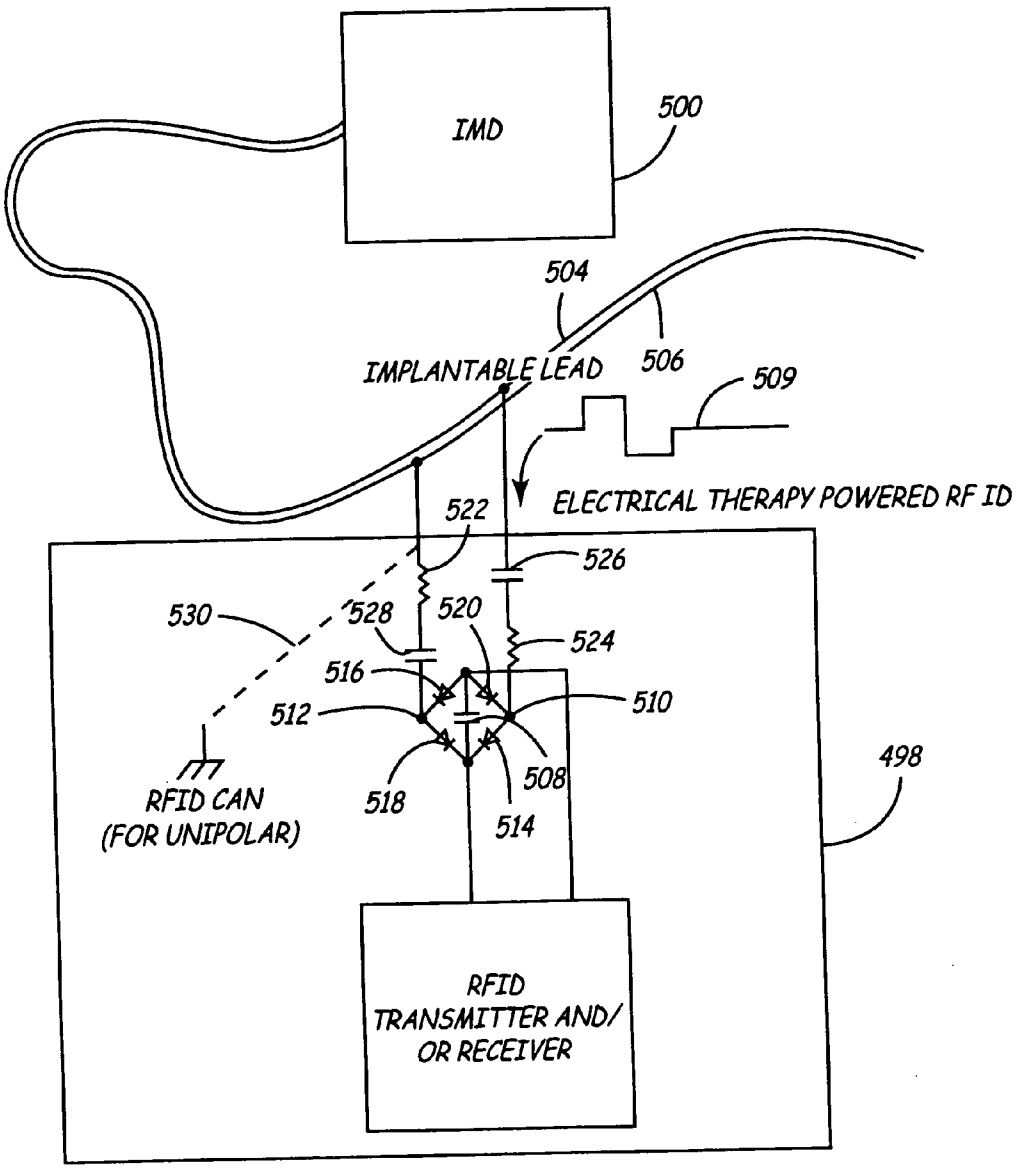
IMD
500
504
IMPLANTABLE LEAD
506
509
ELECTRICAL THERAPY POWERED RF ID
522
526
530
528
520
524
516
512
510
498
RFID CAN
(FOR UNIPOLAR)
518
508
514
RFID
TRANSMITTER AND/
OR RECEIVER

FIGURE 8

METHOD AND APPARATUS FOR AUTOMATIC IMPLANTABLE MEDICAL LEAD RECOGNITION AND CONFIGURATION

BACKGROUND OF THE INVENTION

[0001] 1. Field of the Invention

[0002] The present invention relates generally to implantable medical devices; and, more particularly, to a method and apparatus to automatically identify multiple leads and their proper connection to an implantable medical device such as a pacemaker or cardioverter/defibrillator.

[0003] 2. Background Art

[0004] An implantable intravascular lead assembly is often implanted within a patient's body to provide electrical stimulation to the heart. Such lead assemblies may include one or more electrical conductors that are adapted to be suitably connected to a source of electrical energy, which may be a pacemaker or cardioverter/defibrillator. The electrical conductor, in turn, includes an electrode tip that engages the endocardial or epicardial tissue of the heart to provide stimulation and sensing capabilities. The lead assembly may be intravenously inserted through a body vessel, such as a vein, into one or more cardiac chambers, or alternatively, attached to the epicardial surface of the heart. The conductor is sealed from body fluids by a biocompatible and bio-stable insulating material.

[0005] In a typical lead assembly, the electrode tip is firmly lodged in, and permanently secured to, the endothelial lining or epicardial surface of the heart. These lead assemblies are referred to as an endocardial or epicardial lead, respectively. Some examples of conventional endocardial and epicardial leads may be found in U.S. Pat. No. 3,348,548 to Chardack, U.S. Pat. No. 3,754,555 to Schmitt, U.S. Pat. No. 3,814,104 to Irnich et al., U.S. Pat. No. 3,844,292 to Bolduc, U.S. Pat. No. 3,974,834 to Kane, U.S. Pat. No. 5,246,014 to Williams, and U.S. Pat. No. 5,397,343 to Smits. A representative defibrillation lead is described in U.S. Pat. No. 6,178,355 to Williams.

[0006] With the increased use of multi-chamber pacemakers and defibrillators such as those that provide bi-atrial or bi-ventricular pacing capabilities, multiple leads are required to deliver electrical stimulation to various locations within the heart. With the use of multiple leads that are positioned within one or more small vessels of the body, it has become even more important to minimize lead and lead connector size. As leads become smaller, it becomes increasingly difficult to mark leads with the appropriate identification, including manufacturer identification and/or lead model and serial numbers. This may make it more difficult for a physician to determine which lead is to be inserted into a given port of an implantable medical device (IMD) during an implant procedure.

[0007] One solution to providing marking information on lead systems is described in U.S. Pat. No. 5,824,030 to Yang. This patent discloses a single-pass transvenous lead for atrial sensing and pacing, ventricular sensing and pacing, as well as for ventricular and atrial defibrillation. Visual indicators are provided on the lead to identify which one of several distal electrode pairs are being used.

[0008] Another solution to properly configuring the leads of an IMD is disclosed in U.S. Pat. No. 5,374,279 to Duffin. The described medical electrical pulse generator includes a switchable connector assembly. The connector assembly is provided with connector bores that are each adapted to receive a medical electrical lead. Electrical connectors located within the bores are arranged such that interconnection of the pulse generator circuitry and the configuration of the electrodes on the leads and/or housing of the device can be altered by means of connector pins.

[0009] Yet another method of attaching multiple electrode leads to an IMD is described in U.S. Pat. No. 4,628,934 to Pohndorf. The '934 patent describes an electronic electrode switching circuit that minimizes the number of feedthroughs from a pacer case to a pacer neck that are needed to couple to the pacing lead electrodes. These feedthroughs can be selectively connected to a desired electrode by the physician at the time of initial implantation or any time thereafter. The electronic connection to a feedthrough may be dedicated to a single electrode or electrode pair, or alternatively, the electrodes may be electronically sampled by circuitry in the pacer. The electrode switching circuit may be located in the pacer neck, in an adapter between the pacer neck and a multielectrode lead, or in a multielectrode lead.

[0010] Another method for automatically configuring the multiple leads of an IMD is described in U.S. Pat. No. 6,085,118 to Hirschberg. The '118 patent describes an implantable cardiac stimulator with at least two terminals. Each terminal is connectable to an implantable electrode for delivering stimulation pulses to a heart, and/or for sensing cardiac activity signals. The stimulator also has a switch and a control unit which operates the switch, so that one or both terminals are connectable to the pulse generator. The control unit identifies a position status for at least one of the electrodes in response to a signal received at the time of implantation. Although the control unit may use a signal from an electrode to configure the switch, premature sensed events, artifacts and/or EMI may cause the control unit to incorrectly configure the system.

[0011] Another identification system is described in U.S. Pat. No. 5,300,120 to Knapp, which involves a passive transponder that may be encoded with a binary value that may be up to sixty-four bits long. This value may be read with a hand-held electromagnetic device that is located outside the body and in proximity to the transponder. The encoded information may include patient demographics, implant data, and manufacturer information.

[0012] Another similar mechanism for remotely monitoring device data is described in U.S. Pat. No. 5,626,630 to Markowitz. The disclosed telemetry system includes a remote monitoring station, a repeater worn externally by a patient, and a quasipassive transponder attached to a device implanted in the patient. The remote monitoring station communicates to the repeater to initiate an interrogation routine between the repeater and the transponder to extract patient condition information from the implanted device. When the repeater receives the condition information, it relays it to the remote monitoring station. The disclosed system does not automatically identify leads, calibrate lead-based sensors, or automatically configure leads and/or sensors to an IMD.

[0013] U.S. Pat. No. 5,833,603 to Kovacs describes another system for sensing one or more physiological signals within a living body to measure optical, mechanical,

chemical, and/or electrochemical properties. The system includes a transponder for wirelessly transmitting data corresponding to the sensed parameter values to a remote reader. Disclosed embodiments utilize temperature sensors, strain sensors, pressure sensors, magnetic sensors, acceleration sensors, ionizing radiation sensors, acoustic wave sensors, chemical sensors, and photosensors. The disclosed system does not include means to automatically identify or configure leads, or to calibrate the lead-based sensors.

[0014] Another mechanism for identifying information related to the configuration of an IMD is disclosed in U.S. Pat. No. 5,423,334 to Jordan. The disclosed system provides a characterization tag for attachment to the IMD. The tag circuitry is selectively loaded to store data describing the IMD, and may be read by a probe located outside the body. The system does not store lead identification or configuration information.

[0015] Yet another system for storing and transmitting device information is described in U.S. Pat. No. 5,252,962 to Urbas. The disclosed device includes a sensor for use in transmitting a parameter such as temperature from within a living body to a device that is located outside the body. The IMD includes a programmable memory to store user ID data.

[0016] While the above publications teach various improvements to the art, they do not address the problem of identifying and configuring multiple leads and/or other implantable devices for use with an IMD.

SUMMARY OF THE INVENTION

[0017] It is a principal object of the present invention to provide an improved interface between conventional lead systems and IMDs.

[0018] Another object is to provide a system and method for automatically identifying leads and for enabling the proper connection of the identified leads to an IMD.

[0019] Another object is to provide a system and method for automatically receiving sensor calibration information for lead-based sensors.

[0020] Yet another object is to provide a system and method for automatically calibrating lead-based sensors.

[0021] Another object is to provide an IMD that automatically configures connections between one or more leads and respective IMD ports.

[0022] An additional object is to provide a connector block for electrically and mechanically coupling multiple leads or sensors to an electrical source of energy, such as a pacemaker, defibrillator or neuro stimulator.

[0023] Yet another object is to provide a system for use with an IMD that allows an additional component of the IMD to be automatically identified for purposes of system configuration.

[0024] It is a further object to provide a system for use with an IMD that stores patient data that may be transferred to a central location for use in performing diagnosis and therapy.

[0025] The current system and method addresses these and other objectives by providing a system for use with an active IMD (hereinafter, "IMD") such as a pacing device, or another external device. The system is capable of automatically identifying one or more additional implantable medical devices such as leads that may be associated with the IMD. In one embodiment, the invention includes a first communication circuit that is attached to, or integrated within, a lead. The communication circuit stores data such as model and serial numbers, technical information, and calibration data. At the time of implant or sometime thereafter, information stored by the first communication circuit may be transferred to a second communications circuit that is external to the lead. The second communications circuit may reside within the IMD, an external programmer, a personal data management (PDM) unit, or within any other unit such as a Personal Digital Assistant (PDA) that is located within a predetermined range of the first communication circuit. This transferred data can be used both to indicate the presence of the lead, and to identify lead type. Such information can be used, for example, to automatically configure the connector block of the IMD to properly couple to the lead. The data can further be used to automatically adjust amplifier gains or other circuitry associated with the lead. The data may be entered into a patient record on an external programmer, or may be transferred to a central storage location for use by health care providers when performing diagnosis and therapy associated with the IMD.

[0026] In another embodiment, the data provided by the first communications circuit includes identification and calibration information concerning additional components of the system. For example, physiologic sensors carried on the leads may be identified so that the IMD can enable and calibrate internal circuitry to receive the physiologic signals. This allows certain functions within the IMD to automatically be enabled only when a component is present in the system so that power can otherwise be conserved. Any other components of an IMD may be identified and calibrated by using a communication circuit according to the current invention. This may include implantable devices such as pluggable antennas, electrodes that can be selectively coupled to the IMD case, and any other types of components that may be selectively added to the system.

[0027] According to one aspect of the system, the first communication circuit may be a passively-powered RF transponder. The transponder receives power from an external source. Ultrasonic, optical, and electromagnetic power may be used to power the first communication circuit. In another embodiment, the first communication circuit may receive power from its host unit, such as via the conductors of a lead. According to another aspect of the system, the first communication circuit may include a receiver as well as a transmitter to receive data signals from an external source. This allows the first communication circuit to be programmed with identification, calibration, and other data at the time of component manufacture.

BRIEF DESCRIPTION OF THE DRAWINGS

[0028] **FIG. 1** is a schematic view of an implantable medical device (IMD) implanted within a body.

[0029] **FIG. 2** is a side cutaway view of an exemplary in-line connector assembly at line **2-2** of **FIG. 1FIG. 3** is a side perspective view of one embodiment of passive transponder of **FIG. 2**.

[0030] **FIG. 4** is a side perspective view illustrating a sealed transponder coupled to a lead.

[0031] **FIG. 5** is a system block diagram of one embodiment of an IMD that may utilize the current invention.

[0032] **FIG. 6** is a circuit block diagram illustrating in more detail exemplary components of the transponder and transmitter/receiver circuit of **FIG. 5**.

[0033] **FIG. 7** is a system block diagram illustrating additional embodiments of the present invention.

[0034] **FIG. 8** is a circuit diagram illustrating a transponder coupled to the therapy output energy source of an IMD.

DESCRIPTION OF THE PREFERRED EMBODIMENTS

[0035] **FIG. 1** is a schematic view of an implantable medical device (IMD) **12** implanted within a body. Leads **14** and **15** are shown coupled to the connector assembly **20** of IMD **12** using one or more feedthroughs. IMD **12**, which may be implanted near a human heart **16** or at another location in the body, may be a pacemaker, cardioverter/defibrillator, drug delivery device, brain stimulator, gastric stimulator, nerve stimulator, or any other implantable device. For example, implantable medical device **12** may be an implantable cardiac pacemaker such as that described in U.S. Pat. No. 5,158,078 to Bennett et al., U.S. Pat. No. 5,312,453 to Shelton et al., or U.S. Pat. No. 5,144,949 to Olson et al. Alternatively, IMD **12** may be a pacemaker-cardioverter-defibrillator (PCD) such as those described in U.S. Pat. No. 5,545,186 to Olson et al., U.S. Pat. No. 5,354,316 to Keimel, U.S. Pat. No. 5,314,430 to Bardy, U.S. Pat. No. 5,131,388 to Pless, or U.S. Pat. No. 4,821,723 to Baker, et al. As yet another example, IMD **12** may be an implantable neurostimulator or muscle stimulator such as those disclosed in U.S. Pat. No. 5,199,428 to Obel et al., U.S. Pat. No. 5,207,218 to Carpentier et al., or U.S. Pat. No. 5,330,507 to Schwartz. The IMD may also be an implantable monitoring device such as that disclosed in U.S. Pat. No. 5,331,966 to Bennett et al., wherein all of the foregoing patents are incorporated by reference herein in their respective entireties.

[0036] **FIG. 2** is a side cutaway view of an exemplary in-line connector assembly **20** at line **2-2** of **FIG. 1**. The connector assembly is shown coupled to a proximal end of lead **14**. Connector assembly **20** employs a "setscrewless" lead retainer, and a stepped lumen **202** that receives a connector pin mounted to the proximal end of lead **14**. The connector pin includes two conductive connector surfaces **208** and **210**, and two insulative areas **212** and **214**. Insulative areas **212** and **214** are each provided with a plurality of sealing rings **218** and **220** to seal lumen **202** against fluid entry and to provide a seal intermediate conductive areas **208** and **210**. Conductive area **208** may take the form of a metallic, cylindrical pin. Conductive area **210** is illustrated as a metal cylinder.

[0037] Connector assembly **20** is shown mounted to the outer enclosure **222** of IMD **12**. Connection between the implantable pacemaker and the lead **14** is made by means of spring members **224** and **226**, which are mounted in conductive ferrules **228** and **230**, respectively. Ferrules **228** and **230** are metal cylinders having central bores and associated internal circumferential grooves that retain the spring members **224** and **226**. When inserted, spring members **224** and **226** provide for electrical coupling. Ferrules **228** and **230** are coupled to feedthrough wires **232** and **234** by means of wires **236** and **238**, respectively.

[0038] The proximal end of lead **14** is shown provided with a cylindrical plastic member **240** that includes a circumferential groove **242** that mates with a deflectable beam lead retainer **244** provided at the distal end of the connector assembly **20**. In the embodiment shown, the lead retainer **244** is integrally molded to connector module **20**, although the retainer may also be fabricated separately. Surrounding the deflectable lead retainer **244** is an insulative boot **246**, which in turn, is surrounded by a suture **248** that acts as a lock to prevent expansion of the deflectable beam retainer **244** to retain lead **14** within connector assembly **20**.

[0039] The proximal end of lead **14** further includes a first and second communication circuit, which in this embodiment are a passive transponder **262** adapted to communicate with transmitter/receiver **260**, respectively. This communication may be facilitated by RF transmissions as substantially described in U.S. Pat. Nos. 4,730,188, 5,041,826, and 5,166,676 to Milheiser, U.S. Pat. No. 5,025,550 to Zirbes, or U.S. Pat. Nos. 5,223,851 and 5,281,855 to Hadden, incorporated herein by reference in their entireties. As noted in the foregoing patents, such passive transponders include an energy coupler for wirelessly coupling electromagnetic, ultrasonic, or optical energy, for example, that is provided by a remote energy source. In one embodiment of the current invention, the energy source is provided by transmitter/receiver **260**. Energy may also be provided by another circuit in the IMD. Passive transponder **262** further includes a communication circuit powered by the energy received from the remote energy source, and that is adapted to transfer a signal indicative of identification data stored within the transponder. This will be discussed further below.

[0040] It may be noted that the connector assembly **20** shown in **FIG. 2** is exemplary only, and many other types of connector assemblies and lead connector types including in-line or bifurcated lead connectors and connector assembly configurations may be utilized.

[0041] **FIG. 3** is a side perspective view of one embodiment of passive transponder **262** of **FIG. 2**. The transponder includes a wire coil antenna **106** encircling bobbin **108**. This antenna may be tuned to the frequency of the carrier signal using an RLC tuned resonant circuit including capacitor **105** to allow for more efficient signal transmission. The center of bobbin **108** includes a lumen **109** to receive a lead. An integrated circuit **102** containing RF receiver/transmitter circuitry may be mounted on bobbin **108**. A hermetic cylindrical cover (not shown in **FIG. 3**) seals the transponder **262** in a manner described in U.S. Pat. No. 5,782,891 to Donders, incorporated herein by reference in its entirety. **FIG. 3** further illustrates a surface acoustic wave (SAW) filter **104** to filter signals transmitted by the RF receiver/transmitter circuitry in a manner described further below.

[0042] **FIG. 4** is a side perspective view illustrating a sealed transponder **262** coupled to lead **14**. The sealed transponder **262** may be inserted under a connector sleeve (not shown in **FIG. 4**) and backfilled with medical adhesive. It may be noted that the transponder of **FIG. 3** may be coupled to the lead in many other ways. For example, in

another embodiment, the transponder may be fully integrated within the lead body instead of being provided as a separate component.

[0043] **FIG. 5** is a system block diagram of one embodiment of an IMD that may utilize the current invention. IMD **300** is provided with an input/output circuit **320** to sense physiological signals and/or to provide electrical stimulation to a patient. If IMD **300** is a pacemaker, input/output circuit **320** may provide all of the basic timing, stimulation and sensing functions of a DDD or DDDR of a commercially-available pacing device.

[0044] Input/output circuit **320** provides the control functions of the IMD. For example, digital controller/timer **330**, which receives a clock signal from crystal oscillator circuit **338**, generates the appropriate timing and control sequences for the rest of the IMD. Battery **318** provides power for all the components of the IMD, and power-on-reset circuit **336** defines an initial operating condition and also resets the operative state of the device in response to detection of a low battery condition. Reference mode circuit **326** generates stable voltage and currents references for the analog circuits within input/output circuit **320**.

[0045] **FIG. 5** also illustrates leads **14** and **15** coupled to IMD **300**. Additional leads\catheters such as exemplary lead **26** may further be implanted within the body for sensing signals and/or for providing electrical stimulation or drug therapy in a manner to be discussed below.

[0046] One or more of these leads may carry one or more electrodes. Lead **14**, which may be an atrial bipolar pacing lead, is shown carrying two electrodes **19** and **21** positioned in the right atrium of heart **16**. Electrodes **19** and **21** may be used both to sense and pace the atrium in a manner well known in the art. Similarly, lead **15** represents a ventricular bipolar lead that may carry two electrodes **23** and **25** implanted in the right ventricle of the heart **16**. As discussed above in conjunction with atrial lead **14**, electrodes **23** and **25** may be used to sense and pace the ventricle in a manner well known in the art.

[0047] In addition to electrodes, one or more other types of sensors of any type known in the art for sensing physiological signals may also be carried on one or more of the leads. For example, sensors may be provided to measure oxygen saturation, change in pressure dP/dT, temperature, minute ventilation or respiration rate. Exemplary sensor systems are described in U.S. Pat. No. 5,154,170 to Bennett et al., U.S. Pat. No. 5,144,524 to Reuter, U.S. Pat. No. 5,271,395 to Wahlstrand, and U.S. Pat. No. 4,485,813 to Anderson.

[0048] Analog signals sensed by any of the sensors and/or electrodes may be provided to a programmable electronic switch such as selection circuit **361** to be described further below. The selected signals are provided to sense amplifiers **360**. The gain of sense amplifiers **360** may be controlled via controller/timer circuit **330** via gain/energy control **348**. The amplified analog signals are received by controller/timer circuit, and provided to analog-to-digital converter (ADC) and multiplexor circuit **328**. The ADC digitizes the analog signals so that the signals may be stored and/or transferred to an external device such as a programmer.

[0049] Transmission of signals to an external device is accomplished via RF transmitter/receiver circuit **332** and a telemetry antenna **334**. The RF transmitter/receiver circuit **332** demodulates received downlink telemetry communications and transmits uplink telemetry data. An exemplary circuit for demodulating and decoding downlink telemetry may correspond to that disclosed in U.S. Pat. No. 4,556,063, while uplink telemetry functions may be provided according to U.S. Pat. Nos. 5,127,404 and 4,374,382. Uplink telemetry capabilities will typically include the ability to transmit stored digital information as well as physiological signals sensed in real-time as described in the '404 patent. It may also be capable of transmitting marker signals indicating the occurrence of sensed and paced depolarizations in the atrium and ventricle, as disclosed in the cited '382 patent.

[0050] IMD **300** further includes a microcomputer circuit **302**. This circuit controls the operational functions of digital controller/timer circuit **330** via data and control bus **306** by specifying, for example, which timing intervals are employed for performing pacing and sensing functions. Microcomputer **302** may include a microprocessor **304** and associated system clock **308** and on-board processor RAM and ROM **310** and **312**, respectively. In addition, microcomputer circuit **302** may include an additional storage unit such as RAM/ROM circuit **314** to provide additional memory capacity. Microprocessor **304** may be interrupt driven, operating in a reduced power consumption mode normally, and awakened in response to defined interrupt events, which may include sensed physiological signals.

[0051] In addition to interfacing to microcomputer **302**, controller/timer **330** further interfaces directly or indirectly with a battery **318**, an activity sensor **30**, a telemetry antenna **334**, and various feedthroughs (not shown in **FIG. 5**) to the lead connector elements included in connector assembly **20** discussed above. A piezoelectric crystal activity sensor **30** may be provided to generate electrical pressure wave signals in response to sensed physical activity. The generated signal is processed by activity circuit **322**, which, in turn, provides activity signal **324** to digital controller/timer circuit **330**. Activity circuit **322** and associated activity sensor **30** may correspond to the circuit and sensor disclosed in U.S. Pat. No. 5,052,388 to Sivula et al., incorporated herein by reference in its entirety.

[0052] IMD **300** also includes an output amplifier circuit **340** to provide electrical stimulation to heart **16** via one or more of electrodes **23** and **25** on lead **18**V, as well as one or more of electrodes **19** and **21** located on lead **18**A. In order to trigger generation of a ventricular pacing or V-PACE pulse, digital controller/timer circuit **330** generates a trigger signal on V-TRIG line **342**. Similarly, in order to trigger an atrial pacing or A-PACE pulse, digital controller/timer circuit **330** generates a trigger pulse on A-TRIG line **344**. The A-PACE and V-PACE pulse energies may be controlled in pulse width and/or amplitude by gain/energy control **348** which receives a pace energy command signal from digital timer/controller circuit **330**. The timing of pacing signals may be controlled based on programmable rate-response features that take into consideration one or more measured physiological parameters as known in the art. Digital controller/timer circuit **330** defines the pacing or escape intervals used to pace the atrium and ventricle using any of the sensing and timing mechanisms known in the art. The signals generated by output amplifier circuit may be provided to a programmable switch such as selection circuit

341, which is programmed by controller/timer **330** in a manner to be discussed below.

[**0053**] In the current embodiment, controller/timer circuit is further shown coupled to transmitter/receiver **380**, which, in turn, is coupled via connection **386** to RF antenna **260**. This antenna transmits energy to passive transponder **262** carried on lead **14**. The energy, which may be optical, electromagnetic, or ultrasonic, for example, is used to power circuitry within passive transponder **262** such that the transponder initiates a data transfer operation to the transmitter/receiver **380**. This transferred data may include lead and sensor identification information stored by the transponder and used by IMD **12** to configure the system in a manner to be discussed further below.

[**0054**] In one embodiment, transmitter/receiver **380** decodes data received from the transponder **262**, and provides this data to digital controller/timer circuit **330** for subsequent storage in RAM/ROM unit **314**. The data may also be transmitted to an external programmer **420** (not shown in **FIG. 5**) via antenna **334**. Digital controller/timer circuit **330** may initiate an interrogation of the transponder following lead implant detection via antenna **260**. Lead implant detection may be performed as described in U.S. Pat. No. 5,534,018 and 6,016,447 to Wahlstrand and Juran, respectively, incorporated herein by reference in their entireties.

[**0055**] It may be noted that although **FIG. 5** illustrates transmitter/receiver circuit **380** as being a separate circuit as compared to transmitter/receiver **332**, the two circuits may be included as a single circuit providing both the ability to transfer and receive data to/from an outside device, and to further receive and/or transmit data from one or more transponders such as transponder **262**.

[**0056**] **FIG. 6** is a circuit block diagram illustrating in more detail exemplary components of transponder **262** and transmitter/receiver circuit **380** of **FIG. 5**. Transmitter/Receiver **380** includes an energy source **390**, which may be an inductive circuit, or a photoelectric or piezoelectric transducer to generate electromagnetic, ultrasonic, or optical energy, respectively, as represented by line **391**. This energy is received by energy coupler **392**, which generates the current and voltage levels needed to power the rest of transponder **262**. Transponder includes a control circuit **393**, which is coupled to a non-volatile storage device **394**. The non-volatile storage device may be a switch device, or any other type of non-volatile storage device known in the art, including a read-only memory (ROM). One or more data values indicative of device type, device technical information, and/or device configuration information may be stored in storage device **394** and read by control circuit **393**. The control circuit **393** provides this information to transmitter/receiver **395**, which transmits the data via an RF or other type of communication to transmitter/receiver **396**. This transmission is indicated by line **397**.

[**0057**] Transmitter/Receiver **380** further includes a transmitter/receiver **396** that may provide an unmodulated carrier signal to transmitter/receiver **395**. Transmitter/receiver **395** has a tuned resonant circuit as discussed above for resonating at the frequency of the carrier signal to re-transmit a signal at the carrier frequency. The transmitter/receiver **395** also includes means for superimposing an information signal on the re-transmitted signal by modulating the carrier or harmonies of the carrier to reflect the information stored by storage device **394**. It may be noted that in an alternative embodiment, the signal provided by the transmitter/receiver **396** is used both as the energy source and the carrier signal such that energy source **390** is not needed.

[**0058**] In one embodiment of the invention, transmitter/receiver **395** may be programmed with information from an external transmitter/receiver circuit at the time of manufacture. This information may include model and serial numbers, lot numbers, expiration dates, electrical characteristics, labeling changes, cautions, product performance results, recall information, and shipping information such a freight IDs and the like. The transponder could further be programmed to store intended therapy information, indications for use, and calibration parameters. All, or portions of, associated technical manuals may be downloaded to the transponder as permitted by the capacity of the storage device.

[**0059**] If transponder is capable of receiving data from an external device in the manner discussed above, data stored within the IMD may be loaded into storage device **394**. For example, storage device **394** may store the therapy settings and/or any programmable parameters used to calibrate the IMD for a specific patient. These stored settings and parameters could then be automatically uploaded from transponder **362** following a replacement procedure during which the patient receives a new IMD. This saves time, since manual intervention is not required to configure the newly-implanted device. Other information may likewise be downloaded to transponder **362**, including general patient information and health history, and information associated with drug therapies that may or may not be coordinated with the therapy provided by the IMD. In one embodiment, a physician may store information such as threshold values, lead or other impedance values, and/or additional operational and diagnostic information that are determined either at the time of implant, or during subsequent patient visits.

[**0060**] Returning now to **FIG. 5**, use of the lead identification and configuration information is discussed further. Information from one or more transponders such as transponder **262** may be obtained by the input/output circuit **320** in the manner discussed above. This information may be stored in memory of the IMD such as memory within microcomputer circuit **302**. The data may also be transferred to an external device for storage with patient record data. This information may be analyzed by microcomputer circuit **302** or an external processor to automatically configure the IMD. For example, this data can be used by the processor to adjust gain/energy control circuit **348** in a manner that controls the gains of output amplifier circuit **340** and sense amplifiers **360**. The adjustments may be based on the type of leads and sensors that are detected in the system. According to one aspect of the system, in the event a particular lead or sensor is not present, unused functions within the IMD may be placed in a low-power mode to conserve battery power.

[**0061**] The ability to adjust the gain associated with a sensed signal is important for several reasons. Physiological sensors such as pressure, temperature, oxygen saturation, or any of the other sensors types known in the art to measure physiological parameters often have operating parameters that vary widely. This is a result of variable conditions that occur during the manufacturing process, as well as differ-

ences associated with materials used during production. Therefore, different sensors of the same type may have significantly different scale factors, offsets, and gains. One way to compensate for such variability involves performing a test at the time of implant. A physician may test sensor operation and calibrate the sensor to account for the variable factors. A system and method for performing this type of calibration is described in U.S. Pat. No. 5,919,221. This type of calibration procedure may be time-consuming and error prone, however.

[0062] According to the current invention, sensors may be tested at the time of manufacture to determine specific operating parameters. These parameters may then be stored in transponder storage device **394**, which may be carried on the sensor lead or the sensor itself. These parameters may be transferred to an IMD in the manner discussed above for use in automatically adjusting sensor gains to account for the sensor differences, and may be further used to adjust and calibrate the IMD functions associated with the sensors. For example, sensor output could be calibrated if an active sensor is being utilized. Such parameters may also be used by a data processing system such as microcomputer **302** to adjust digital values derived from the measured sensor signals. This eliminates the need for human intervention.

[0063] Information gained from the transponder may also be used by controller/timer **330** to control selection circuits **361** and **341**. For example, the signals provided to sense amplifiers **360** may be selected by selection circuit **361** based on the leads and/or sensors being used by a particular system. Similarly, the signals that are driven by output amplifier circuit **340** may be selected by selection circuit **341** based on whether a lead or a particular electrode is available within the system, and is being used to provide therapy for a given patient. The selection circuits thereby provide "plug-and-play" capabilities for the IMD connector block based on the devices that are sensed within the system.

[0064] Information provided by the transponder may further be used to select the configuration of switchable circuits such as those described in U.S. Pat. No. 4,665,919 to Mensink, incorporated herein by reference in its entirety. The configuration of the switchable circuits controls one or more operating parameters of the device, such as input amplifier parameters and filter settings and sensitivity. This configuration can be modified based on the type of components available within the system as indicated by data stored in one or more of transponder circuits **362**.

[0065] The uses of the configuration and calibration data discussed above are exemplary only, and it will be understood that such data may be used in many other ways to program or automatically calibrate electronic circuitry associated with an IMD or an external device used with the IMD.

[0066] **FIG. 7** is a system block diagram of additional embodiments of the present invention. Specifically, a bi-directional wireless communications system between programmer **420**, personal data management (PDM) unit **420'** and a number of implantable medical devices (IMDS) represented by IMD **410**, IMD **410'** and IMD **410"** is shown. The IMDs are implanted in patient **10** beneath the skin or muscle. The IMDs are electrically coupled to electrodes **418**, **430**, and **436** respectively in a manner known in the art. IMD **410** may include a microprocessor for timing, sensing and pacing functions consistent with preset programmed functions as discussed above. Similarly, IMDs **410'** and **410"** may be microprocessor-based to provide timing and sensing functions to execute the clinical functions for which they are employed. For example, IMD **410'** could provide neural stimulation to the brain via electrode **430** and IMD **410"**, and/or may function as a drug delivery system that is controlled by electrode **436**.

[0067] The various functions of the IMDs may be coordinated using wireless telemetry. Wireless links **442**, **444** and **446** jointly and severally couple IMDs **410**, **410'** and **410"** such that programmer **420** may transmit commands or data to any or all the of IMDs via one of telemetry antennas **428**, **432** and **438**. This configuration provides a highly flexible and economical wireless communications system between the IMDS. Further, the structure provides a redundant communications system, which enables access to any one of a multiplicity of IMDs in the event of a malfunction of one or two of antennas **428**, **432** and **438**.

[0068] Programming commands or data are transmitted from programmer **420** to IMDs **410**, **410'** and **410"** via external RF telemetry antenna **424**. Telemetry antenna **424** may be an RF head or equivalent. Antenna **424** may be located on programmer **420** externally on the case or housing. Telemetry antenna **424** is generally telescoping and may be adjustable on the case of programmer **420**. Both programmer **420** and PDM unit **420'** may be placed a few feet away from patient **10** and would still be within range to wirelessly communicate with telemetry antennas **428**, **432** and **438**.

[0069] In one embodiment, a remote web-based expert data center **462** may be accomplished through programmer **420** or PDM unit **420'**. Accordingly, programmer **420** and PDM unit **420'** function as an interface between IMDs **410**, **410'** and **410"** and data center **462**. One of the many distinguishing elements of the present invention includes the use of various scalable, reliable and high-speed wireless communication systems to bi-directionally transmit high fidelity digital/analog data between programmer **420** and data center **462**.

[0070] There are a variety of wireless mediums through which data communications could be established between programmer **420** or PDM unit **420'** and data center **462**. The communications link between programmer **420** or PDM unit **420'** and data center **462** could be modem **460**, which is connected both to programmer **420** and to data center **462**.

[0071] Alternative data transmission systems include, without limitations, stationary microwave and/or RF antennas **448** being wirelessly connected to programmer **420** via tunable frequency wave **450**, and with data center **462** via wireless link **465**. Similarly, PDM unit **420'**, mobile vehicle **452**, and satellite **456** are in communications with data center **462** via similar wireless links. Further, mobile system **452** and satellite **456** are in wireless communications with programmer **420** or PDM unit **420'** via tunable frequency waves **454** and **458**, respectively.

[0072] In one embodiment, a telnet system may be used to wirelessly access data center **462**. Telnet emulates a client/server model and requires that the client run dedicated software to access data center **462**. The telnet scheme may employ various operating systems including UNIX, Macintosh, and all versions of Windows.

[0073] Using the system shown in **FIG. 6**, an operator at programmer **420** or data center **462** may initiate remote contact with any of the implanted devices via link antennas **428**, **432** and **438** to enable data reception and transmission. For example, an operator or a clinician at data center **462** may downlink to programmer **420** to perform a routine evaluation of programmer **420**. If a downlink is required from programmer **420** to IMD **410** for example, the downlink is affected using telemetry antenna **422**. In the alternate, if an uplink is initiated from patient **10** to programmer **420**, the uplink is executed via wireless link **426**.

[0074] Each antenna from the IMDs can be used to uplink all or one of the IMDs to programmer **420**. For example, IMD **410"**, which relates to neural implant **430**, can be implemented to up-link, via wireless antenna **434** or wireless antenna **434'**, any one, two or more IMDs to programmer **420**. Preferably bluetooth or equivalent chips, adopted to function within a body and which result in low current drain, are included in the IMD to provide wireless and seamless connections **442**, **444** and **446** between IMDs **410**, **410'** and **410"**. The communication scheme is designed to be broadband compatible and capable of simultaneously supporting multiple information sets and architecture, transmitting at relatively high speed, to provide data, sound and video services on demand.

[0075] The various communication paths as shown in **FIG. 6** allow lead identification and sensor configuration data to be uploaded to either programmer **420**, or to data center **462**. Specifically, in the system of **FIG. 6, a** transmitter/receiver such as transmitter/receiver **380 (FIG. 5)** may be resident in programmer **420**. This transmitter/receiver may interrogate transponders provided on one or more of the leads to determine lead types, serial numbers, and any available sensor calibration values in a manner similar to that described above. The transfer of information from the transponders may be performed using data encryption technology as described in the co-pending application entitled "Method and Apparatus to Secure Data Transfer from Medical Device Systems", Ser. No. 09/431,881 filed Nov. 2, 1999 by Nichols and incorporated herein by reference. Information that is gained during the interrogation may be entered and stored into a patient record either within the memory of programmer **420**, or at data center **462**. The information may further be employed to configure one or more IMD functions or systems automatically based on lead types, and/or may also be used to calibrate sensor circuits in ways similar to those discussed above.

[0076] In yet another embodiment, a transmitter/receiver such as transmitter/receiver **380 (FIG. 5)** may instead be resident in PDM **420'**. This transmitter/receiver may interrogate all lead components interconnected to the various IMDs to determine lead types, serial numbers, any sensor calibration values, and to communicate this information to programmer **420**. Programmer may then program any or all of the IMDs to properly configure the IMD configurations. Alternatively, this configuration function may be performed by the processing circuit associated with each IMD.

[0077] The foregoing examples describe several embodiments of the inventive recognition and configuration system and method, although it will be understood that modifications are possible within the scope of the current invention. For example, the foregoing examples discuss a system that is powered using a remote energy source and an energy coupler as shown in **FIG. 6**. Other types of power systems may be utilized, however. In one instance, transponder **262** is not passive, but instead receives power by loosely coupling off of electrical therapy output of an IMD.

[0078] **FIG. 8** is a circuit diagram illustrating a transponder **498** coupled to the therapy output energy source of IMD **500**. IMD **500** is shown coupled to a lead that includes two conductors **504** and **506**. These conductors are coupled to a bridge circuit that includes capacitor **508**. This capacitor is charged by one or more pulse signals generated by IMD **500** during, for example, the delivery of pacing therapies or other pulsed stimulation therapies. The pulsed signals **509** include a position and a negative phase such that during a portion of the signal, the voltage at point **510** is more position than at point **512**, and in a different portion of the signal, the voltage polarity is reverse. In the former instance, current flows through diodes **514** and **516**, and in the later instance current flows through diodes **518** and **520**. In both cases, capacitor **510** is charged in the manner shown.

[0079] In the preferred embodiment, capacitor **510** is charged by the occurrence of multiple pulsed signals. For example, ten or more pulses may be required to completely charge the capacitor. The values of resistors **522** and **524** are selected to prevent the capacitor circuit from presenting an unduly large load that would affect the therapy delivery of IMD **500**. Capacitors **526** and **528** may be provided to prevent a DC offset voltage potential from being present across conductors **504** and **506**, which may promote corrosion of any electrodes that are carried by the lead. Finally, it may be noted that if a unipolar lead is employed, the capacitor circuit is coupled to only a single lead conductor, with the second connection being provided via the IMD and transponder cans, as indicated by dashed line **530**.

[0080] Using the circuit of **FIG. 8**, transponder **498** may be intermittently operated to provide a brief burst of modulated RF energy from the transmitter of the transponder. In a similar manner, the receiver of the transponder could be intermittently powered to receive information from the IMD or another source. This embodiment would allow for longer-range communications than is provided by the passively-powered embodiment.

[0081] Another modification to the current invention involves use of a surface acoustic wave (SAW) filter **104** within the transponder as shown in **FIG. 3**. This type of filter includes an SAW delay line. An RF signal is transmitted from an interrogation unit such as transmitter/receiver circuit **380** of **FIG. 6**, and is received by an antenna residing in the transponder that is coupled to the delay line. The signal is provided to the delay line, which includes predetermined discontinuities that result in signal reflections. The unique signal reflections, which are a result of the selected configuration of the delay line, can be interpreted as a signature which may be transmitted to the interrogation unit for interpretation. The signature may encode a serial number, or any other type of information. The SAW filter thereby serves as a nonvolatile storage device not unlike a hard-wired switch. This filter may be used in place of, or in addition to, storage devices such as storage device **394** of **FIG. 6**.

[0082] According to another aspect of the invention, data stored within a transponder **362** of a component is employed

by an IMD to configure circuitry within the component. For example, an embodiment of a lead may include data interface to couple to an interface of the IMD. Based on information transferred from a transponder of the lead to the IMD, a processing circuit such as micro-computer circuit **302** is capable of transferring signals via the data interface to configure circuitry of the lead. For example, the processing circuit may store data within a programmable device such as a register provided by the lead, thereby configuring the lead for operation with the IMD.

[**0083**] Other modifications are possible within the scope of the current invention. For example, although the above-described embodiments primarily relate to a transponder attached to, or integrated within, a lead, the invention may be usefully employed to identify other implantable medical devices that may be used in conjunction with the active IMD in the system. For example, pluggable antennas or electrodes that may be selectively coupled to the active IMD may be identified and configured using a mechanism similar to that described herein. Additional components such as heart valves or stents could include similar transponders on the surface of, or integrated within, the device to store information that may then be transferred to external devices that are located within, or outside of, the body. Therefore, while particular embodiments of the present invention have been disclosed, it is to be understood that various different modifications are possible and are contemplated within the scope of the specification, drawings, abstract and appended claims.

What is claimed is:

1. A medical system, comprising:

a first implantable medical device (IMD) implanted within a patient having a first communication circuit and storage means for storing data signals descriptive of the medical system;

a second communication circuit in proximity to the first communication circuit to receive the data signals from the first communication circuit;

a second IMD implanted in the patient; and

a processing circuit coupled to receive the data signals from the second communication circuit and to configure the second IMD based on the data signals.

2. The system of claim 1, wherein the second communication circuit is carried within the second IMD.

3. The system of claim 2, wherein the processing circuit is coupled to the second communication circuit.

4. The system of claim 1, wherein the second communication circuit is external to the patient.

5. The system claim 1, wherein the storage means includes means for storing information descriptive of at least one of the first and second IMDs, the information being selected from the group consisting of model and serial numbers, lot numbers, expiration dates, electrical characteristics, labeling changes, cautions, product performance results, recall information, shipping information, freight IDs, intended therapy information, indications for use, and calibration parameters, technical manuals, therapy settings, threshold values, therapy settings and impedance values.

6. The system of claim 1, wherein the first communication circuit includes a passive transponder, and wherein the second communication circuit includes a circuit to provide a signal to power the passive transponder.

7. The system of claim 1, wherein the first communication circuit includes a circuit to receive power from the second IMD.

8. The system of claim 1, wherein the first IMD includes a sensor to sense a physiological parameter, and wherein the second IMD includes sensor means for calibrating operation of the sensor based on the data signals.

9. The system of claim 1, wherein the first IMD includes means for providing electrical stimulation to the patient, and wherein the second IMD includes means for calibrating a manner of delivery of the electrical stimulation based on the data signals.

10. The system of claim 1, wherein the second IMD is capable of performing multiple functions, the second IMD further includes means for disabling one or more of the multiple functions based on the data signals.

11. The system of claim 1, wherein the first communication circuit includes a receiver capable of receiving signals from the second communication circuit.

12. The system of claim 1, wherein the first IMD includes a surface acoustic wave (SAW) filter.

13. The system of claim 1, wherein the storage means stores operating parameters descriptive of the second IMD.

14. The system of claim 1, wherein the second IMD includes switchable circuits, and wherein the processing circuit includes means for configuring the switchable circuits based on the data signals.

15. A system to configure an implantable medical device (IMD), wherein the IMD is in communication with at least one additional component external to the IMD, the system comprising:

a first communication circuit carried on the at least one additional component, the communication circuit to store data signals descriptive of the at least one additional component;

a second communication circuit in proximity to the first communication circuit to receive the data signals from the first communication circuit; and

a processing circuit coupled to receive the data signals from the second communication circuit, and to configure operations of the IMD based on the data signals.

16. The system of claim 15, wherein the first communication circuit is a transponder.

17. The system of claim 16, wherein the transponder is a passive transponder.

18. The system of claim 15, wherein the transponder includes a storage circuit to store the data signals descriptive of the at least one additional component.

19. The system of claim 15, wherein the storage circuit includes a circuit to store ones of the data signals indicative of component identification information.

20. The system of claim 15, wherein the storage circuit includes a circuit to store ones of the data signals indicative of technical data associated with the at least one additional component.

21. The system of claim 15, wherein the at least one additional component is a sensor to sense a physiological parameter, and wherein the storage circuit includes a circuit to store ones of the data signals descriptive of the sensor.

22. The system of claim 15, wherein the at least one additional component is a lead, and wherein the storage circuit includes a circuit to store ones of the data signals indicative of connector information associated with the lead.

23. The system of claim 15, wherein the second communication circuit is located within the IMD.

24. The system of claim 15, wherein the second communication circuit is located in a device external to the IMD.

25. The system of claim 24, wherein the second communication circuit is located in an external programmer.

26. The system of claim 24, wherein the second communication circuit is located in a patient data module (PDM).

27. The system of claim 21, wherein the first communication circuit includes an RF transmitter.

28. The system of claim 27, wherein the first communication circuit includes an RF receiver capable of receiving information from the second communication circuit.

29. The system of claim 28, wherein the first communication circuit includes a circuit to allow the storage circuit to store the information received from the second communication circuit.

30. The system of claim 15, wherein the first communication circuit includes a surface acoustic wave (SAW) filter.

31. The system of claim 15, wherein the IMD includes at least one amplification circuit, and wherein the system further includes a gain adjustment circuit coupled to control the gain of the at least one amplification circuit, and wherein the processing circuit is capable of configuring the gain adjustment circuit based on the data signals.

32. The system of claim 15, wherein the system further includes at least one selection circuit coupled to the at least one additional component, and wherein the processing circuit is capable of configuring the selection circuit to control interconnection of the at least one additional component with the IMD based on the data signals.

33. The system of claim 21, wherein the system further includes a circuit to allow the processing circuit to calibrate the at least one sensor based on the data signals.

34. A method of configuring a medical system, comprising the steps of:

(a) storing data signals in a first IMD;

(b) providing a second IMD;

(c) transferring the data signals from the first IMD to a location outside of the first IMD; and

(d) configuring the second IMD based on the data signals.

35. The method of claim 34, and including:

(a) providing a first communication circuit in the first IMD;

(b) providing a second communication circuit proximal to the second IMD; and wherein step (c) including transferring the data signals from the first IMD to the second IMD via the first and second communication circuits.

36. The method of claim 34, wherein the first IMD includes at least one optional component, and wherein step (d) includes configuring the second IMD to recognize the presence of the at least one optional component.

37. The method of claim 34, wherein step (d) includes configuring the second IMD to optimally operate with circuits included within the first IMD.

38. The method of claim 34, wherein step (d) includes disabling one or more functions of the second IMD.

39. The method of claim 35, wherein step (c) includes providing a signal to the first IMD to power the first communication circuit.

40. The method of claim 34, wherein step (a) includes storing data signals in the first IMD that are indicative of the operating parameters of the second IMD.

41. The method of claim 34, wherein step (a) includes storing data signals in the first IMD that are indicative of the operating parameters of the first IMD.

42. The method of claim 34, wherein step (c) includes transferring the data signals from the first IMD to a programmer, and wherein step (d) includes configuring the second IMD via the programmer.

* * * * *