(No Model.) 4 Sheets—Sheet 1.

J. A. DOBKINS.

FIRE ESCAPE.

No. 560,086. Patented May 12, 1896.

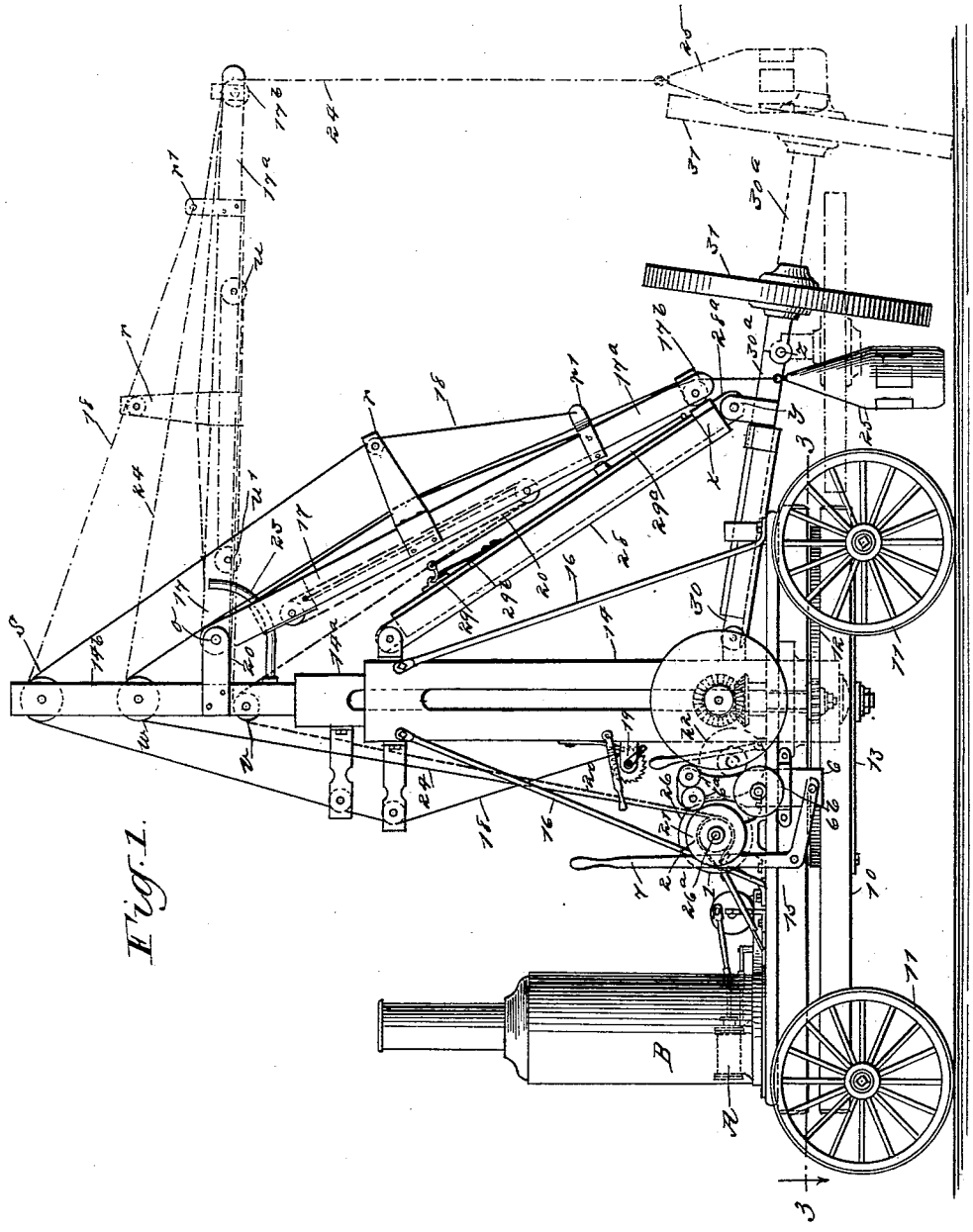

Fig. 1.

WITNESSES:

Paul Yokel

Wm. P. Patton

INVENTOR

J. A. Dobkins

BY

Munn & Co

ATTORNEYS.

ANDREW B. GRAHAM, PHOTO-LITHO. WASHINGTON, D.C.

(No Model.)

4 Sheets—Sheet 2

J. A. DOBKINS.

FIRE ESCAPE.

No. 560,086.

Patented May 12, 1896.

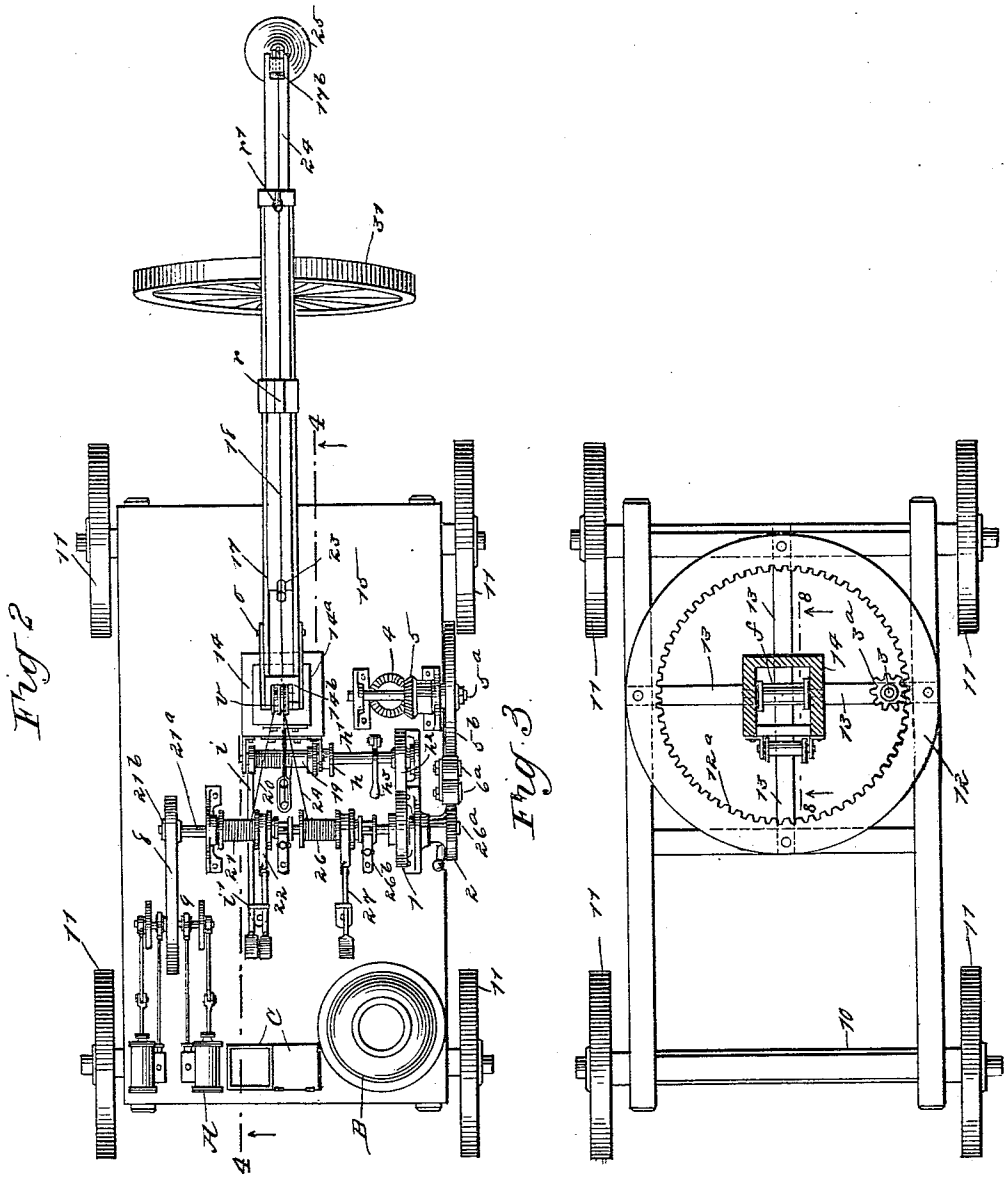

WITNESSES:

Paul Johnson

Wm. P. Patton

INVENTOR

J. A. Dobkins

BY Munn & Co

ATTORNEYS.

ANDREW B. GRAHAM, PHOTO-LITHO. WASHINGTON, D.C.

(No Model.) 4 Sheets—Sheet 3

J. A. DOBKINS.

FIRE ESCAPE.

No. 560,086. Patented May 12, 1896.

Fig. 4.

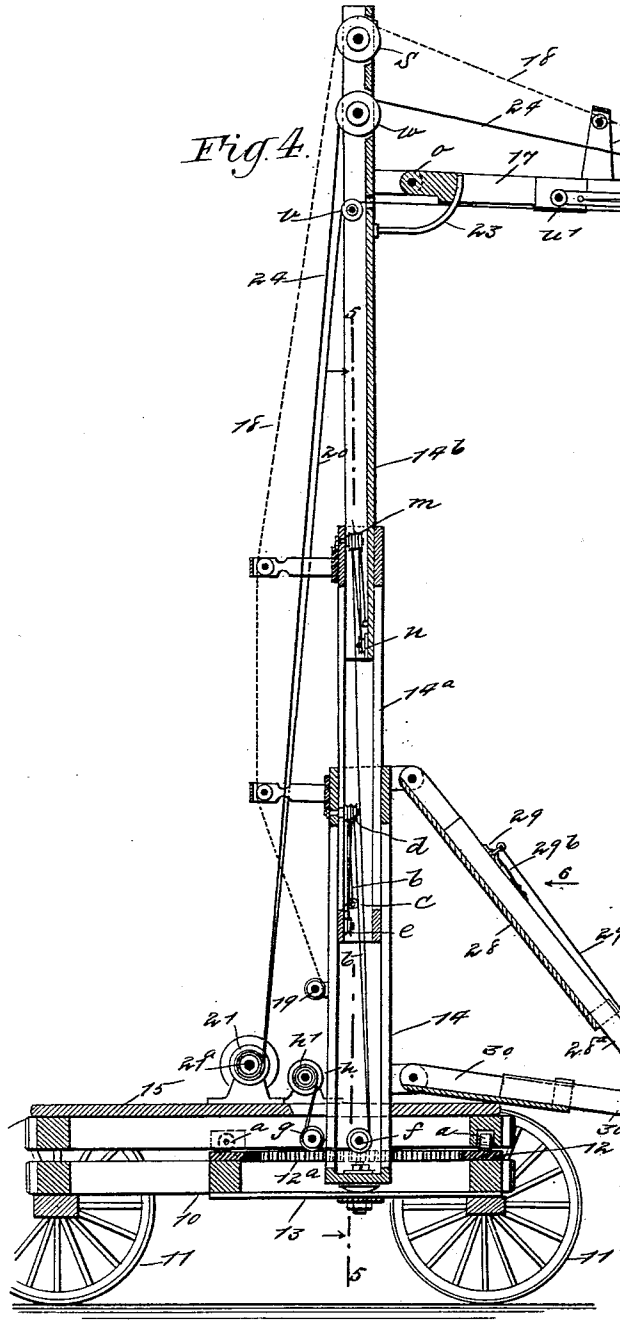

Fig. 5.

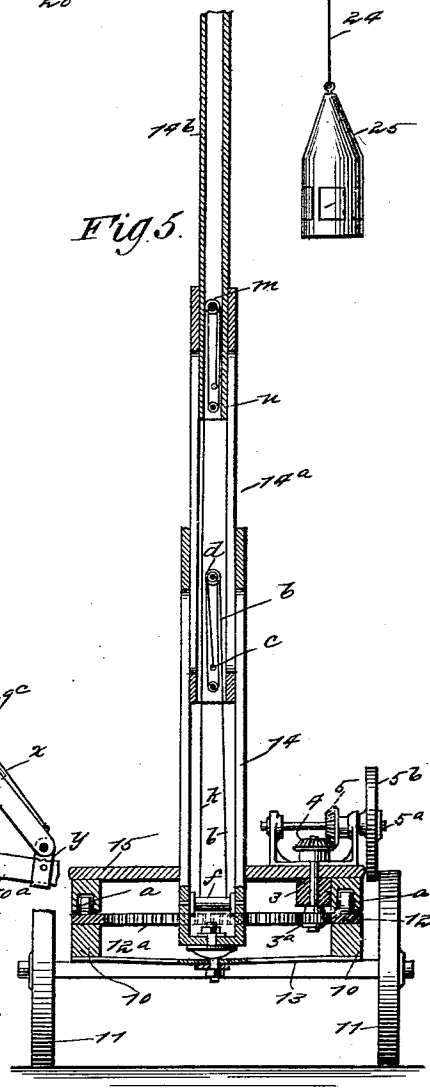

WITNESSES:

Paul Jabel

Wm. L. Patton

INVENTOR

J. A. Dobkins

BY Munn & Co

ATTORNEYS.

ANDREW B. GRAHAM, PHOTO-LITHO., WASHINGTON, D. C.

(No Model.) 4 Sheets—Sheet 4.

J. A. DOBKINS.

FIRE ESCAPE.

No. 560,086. Patented May 12, 1896.

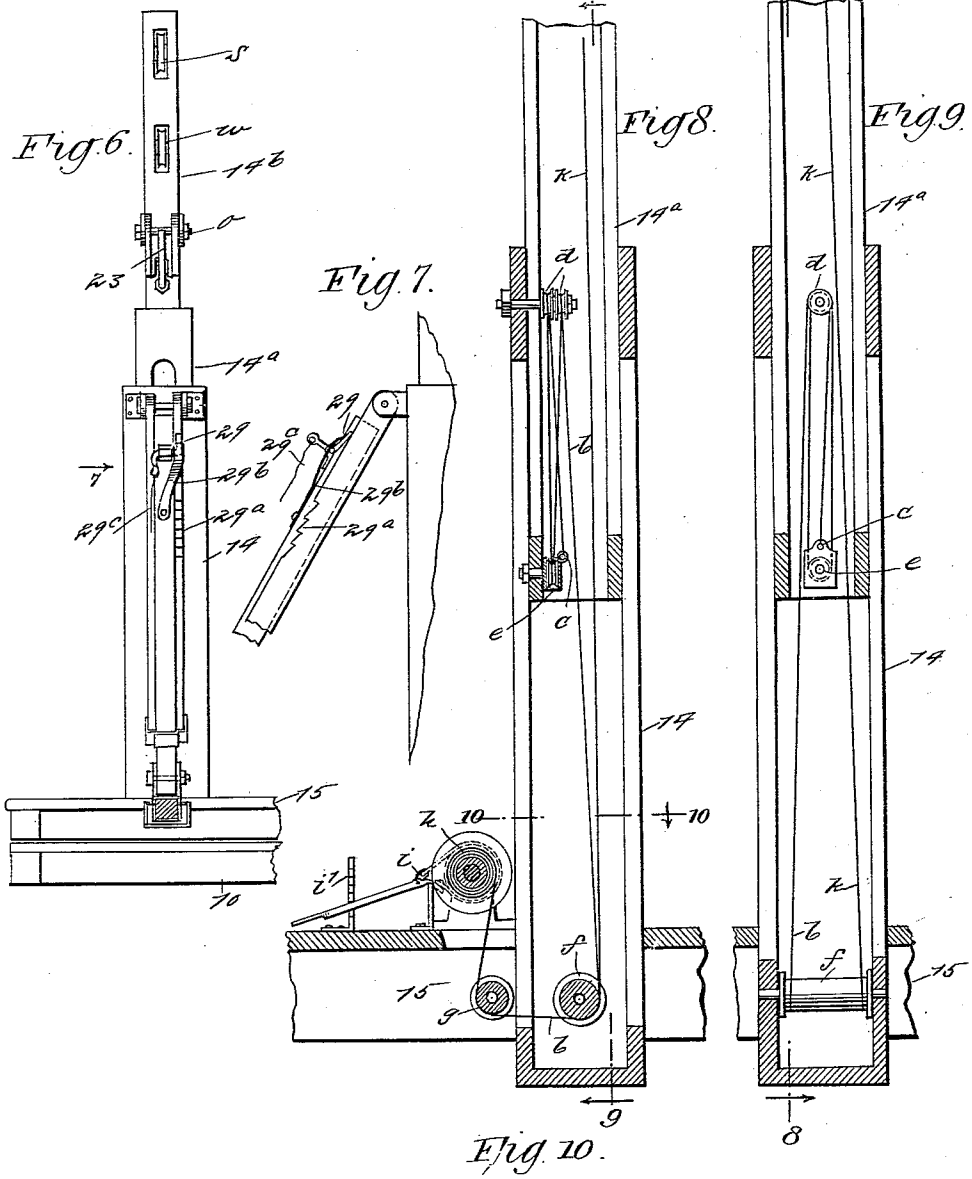

WITNESSES:

Paul Johst

Wm. P. Patton

INVENTOR

J. A. Dobkins

BY

Munn & Co

ATTORNEYS.

ANDREW B. GRAHAM PHOTO-LITHO. WASHINGTON, D.C.

UNITED STATES PATENT OFFICE.

JOHN ALEXANDER DOBKINS, OF LEBANON, OREGON, ASSIGNOR OF SEVEN-SIXTEENTHS TO JOHN R. MORRIS, OF SAME PLACE.

FIRE-ESCAPE.

SPECIFICATION forming part of Letters Patent No. 560,086, dated May 12, 1896.

Application filed July 27, 1895. Serial No. 557,293. (No model.)

To all whom it may concern:

Be it known that I, JOHN ALEXANDER DOBKINS, of Lebanon, in the county of Linn and State of Oregon, have invented a new and Improved Fire-Escape, of which the following is a full, clear, and exact description.

This invention relates to an improved fire-escape apparatus of a style that is portable and adapted for propulsion by applied power to transfer the apparatus from point to point as occasion may require.

The primary object of the invention is to provide a portable fire-escape apparatus which will be adapted for quick adjustment to rescue inmates of a burning building or one threatened by fire from elevated windows or the roof and safely lower the rescued persons to the ground at a safe distance from the fire.

A further object is to provide a portable fire-escape device which will be very convenient in all its operative features, be adjustable for height, be adapted for the lateral extension of an arm to reach windows of a building above ordinary obstructions, such as electric wires, be capable of receiving swinging adjustment for the lateral extension while the base of the structure is maintained stationary in service and at a safe distance from the fire, be strong, durable, and reliable in all its parts, and be capable of operation to move said parts by steam or other power.

The invention consists in the construction and combination of parts, as hereinafter described, and indicated in the claims.

Reference is to be had to the accompanying drawings, forming a part of this specification, in which similar characters of reference indicate corresponding parts in all the views.

Figure 1 is a side view of the complete apparatus shown in compactly-folded condition by full lines, with parts represented extended by dotted lines. Fig. 2 is a plan view of the apparatus. Fig. 3 is a sectional plan view of the lower parts of the device on the line 3 3 in Fig. 1. Fig. 4 is a sectional side elevation of the apparatus with its mast fully elevated and arm extended, taken essentially on the line 4 4 in Fig. 2. Fig. 5 is a transverse sectional view taken substantially on the line 5 5 in Fig. 4. Fig. 6 is a front elevation of an adjustable extension-brace seen in direction of arrow 6 in Fig. 4. Fig. 7 is a fragmentary side view of the parts shown in Fig. 6, seen in the direction of arrow 7 in said figure. Fig. 8 is an enlarged diagrammatic and sectional side view of the telescopic mast forming a part of the improvement broken away at its upper portion, part of the machine-platform being also shown, through which the lower end of the mast projects, the view particularly showing the arrangement of the flexible connections within and near the mast for a sliding movement of the second section in the lowermost stationary section, the line of section being taken substantially as indicated at 8 8 in Figs. 3 and 9. Fig. 9 is a diagrammatic sectional view of a lower portion of the hollow telescopic mast substantially on the line 9 9 in Fig. 8, showing the flexible connections for the lower sliding section of the mast in operative adjustment; and Fig. 10 is a transverse sectional view essentially on the line 10 10 in Fig. 8.

In carrying into effect the features of invention a sill-frame 10 is provided, having such dimensions as will adapt it for reliable support of the parts it is to sustain, and said frame is mounted on wheels 11 for its convenient transportation. At a suitable point, preferably forward of the longitudinal center of the sill-frame, a flat ring 12 is secured thereon, having an internal gear 12^a formed or secured on its inner circular edge, and below the flat ring is affixed a base-support 13 for an upright mast, which is sectional and telescopic, its lower section 14 being pivotally secured thereto, as clearly shown in Figs. 4 and 5.

On the sill-frame 10 a strong framed platform 15 is located, which is preferably afforded an area equal with the sill-frame, and the lower section 14 of the vertical mast is passed down through the platform and thereto secured, preferably by four corner-braces 16, two of which appear in Fig. 1. The platform 15 is supported to receive rotatable movement by antifriction-rollers *a*, that are loosely secured on its lower face at such points as will permit said rollers to bear on

the circular track afforded by the flat top face of the gear-ring 12, so that the platform is in effect a rotatable base for the mast.

The mast is hollow, and to lighten it it is apertured in the sides of its lower sections, there being three sections of sufficient length shown; but the number may be increased or reduced, if desired. The middle section 14^a of the mast slides in the lower section 14, and the upper section 14^b is loosely inserted in the middle section, so that the sections 14^a 14^b may by suitable means be reciprocated to elevate or lower them. As shown in Figs. 4, 5, 8, and 9, the sections of the mast are provided with wire ropes that are arranged within the same for movement of the two upper sections thereof.

The middle section 14^a, as clearly indicated in Figs. 8 and 9, has one end of the wire rope *b* that is to move it attached within it at its lower end, as at *c*, and thence extends up over and down from one of a pair of loose pulleys *d*, engaging a loose pulley *e*, pivoted to the mast-section 14^a near its lower end. From the pulley *e* the rope *b* is upwardly extended to have contact with the other of the pair of pulleys *d*, and thence down to contact with an elongated pulley *f*, pivoted on the sides of the stationary mast-section 14, passing from the lower side of said pulley out through a slot or other aperture in the mast-section to engage with an elongated loose pulley *g*, pivoted on the platform 15. From the loose pulley *g* the wire rope *b* extends up through the floor of the platform 15 to wrap on a rotatably-supported drum *h*, having a friction-band device *i*, whereby the rotation of the drum may be controlled and completely arrested if the lever of said device is adjustably secured to effect such an arrest of motion by a hooked engagement of the lever with a notched post *i'*, as indicated in Fig. 8, which will retain the mast-section 14^a at any desired point of elevation within its range of movement.

The arrangement of the wire rope *k*, provided for the sliding elevation and retention of the upper mast-section 14^b in the middle section 14^a, with regard to the grooved pulleys *m*, single pulley *n*, and elongated lower pulley *f*, is identical with that of the wire rope *b*, so that the lower extremity of the rope *k* may be and preferably is outwardly extended to contact with the drum-like pulley *g*, and thence upwardly trends for attachment to the drum *h* at its end opposite from that whereon the end of the rope *b* is secured. It will be evident that if the lengths of the ropes or other flexible connections *b k* are correctly proportioned to that of the mast-sections the latter may be quickly elevated and held secure by a proper rotation of the drum *h* and its subsequent arrest by the friction-brake *i*, as already explained.

On a projection from the upper mast-section 14^b, near its upper end and on the front side, one section 17 of an extensible arm is pivoted, as shown at *o* in Figs. 1, 2, and 4. Said projections may be bracket-plates, such as shown, or any equivalent of the same. The extension-arm is preferably constructed in two sections, the inner section 17 being channeled to receive the other section 17^a, which is extensible therefrom to produce an arm of sufficient length for effective service. On the section 17, between its ends, a post *r* is erected, having a loose pulley on its upper end, and at the outer end of said section another post *r'* is upwardly projected. A wire rope or other fireproof flexible connection 18 is secured by one end to the outer post *r'* and extends toward the mast over the loose pulley on the post *r* and having contact with the loose pulley *s*, that is pivoted on the upper mast-section 14^b. From the pulley *s* the wire rope 18 trends down to contact with loose pulleys on short arms which respectively project from the rear of the mast-sections 14 14^a, and thence extends to a winch-drum 19, whereon the lower end of the rope is affixed. The drum 19 is rotatably sustained on the rear face of the lower mast-section 14 and is provided with the usual ratchet-wheel and pawl attachment, whereby said drum is prevented from improper rotation. It will be seen that if the drum 19 is rotated in a proper direction by applied manual or other power the two-part arm 17 17^a will be elevated, as indicated by dotted lines in Fig. 1.

The outer section 17^a of the two-part arm mentioned is preferably actuated to slide it outwardly on the other section 17 by a flexible fireproof strand 20, which has one end attached to the inner end of the section 17^a, and thence the strand extends outward to have engagement with a double sheave *u*, which is longitudinally slotted for the rope to work in, on the arm-section 17, thence rearward to have contact with a single sheave *u'* on the rear end of the section 17^a, thence again forward to pass over the other sheave of the pulley *u*, thence rearward to the pulley *v* on the upper mast-section 14^b, thence down to drum 21, that is rotatably supported from the platform 15. It will be evident that if the drum 21 is correctly rotated the rope or strand 20 will be wrapped thereon at its lower end, thereby drawing the single sheave *u'* toward the double sheave *u*, projecting the arm portion 17^a outwardly a corresponding degree. The drum 21 is supplied with a friction-brake 22, (shown in Fig. 2,) which by adjustment will prevent rotation of the drum and thus hold the section 17^a projected to the extent that has been effected by the pull of the flexible strand 20. A curved brace 23 is provided to afford lateral support for the extensible arm 17 17^a, the complete arm for convenience being termed a "crane-arm." The brace 23 is best shown in Figs. 1 and 4 and consists of a preferably metal bar secured to the upper section 14^b of the mast, and from its point of attachment is outwardly projected

and then upwardly bent in arched form to adapt its free outer portion to work in a longitudinal slot formed to receive it in the lower wall of the channeled section 17 of the crane-arm.

On the outer extremity of the crane-arm section 17^a a pulley 17^b is pivoted, and on said pulley the wire rope 24 is imposed, one end of which is pendent and has the passenger-cage 25 thereto attached. The rope 24 is extended from pulley 17^b to a pulley *w* below the pulley *s* on the mast-section 14^b and thence down to a drum 26, that is adapted for coupled connection with the drum 21, and preferably is rotatably supported from the platform 15 in alinement with said drum 21, as indicated in Fig. 2. The drum 26 has a friction-brake device 27 supplied to prevent its rotation and also to control the speed of descent of the cage 25, the said friction-brake being preferably constructed similarly to the brakes previously mentioned.

The cage 25 is rendered fireproof and may be shaped as shown in the drawings, being provided with fireproof doors in its side wall for the entrance and exit of passengers. Said cage may be provided with any preferred means for the admission of air.

An adjustable prop-brace is provided for the mast of the fire-escape and extends forwardly and downwardly from the front of the lower mast-section 14, its upper end being pivoted thereto, as clearly shown in Figs. 1 and 4. The prop-brace is made extensible, being formed of two members 28 28^a, that slide one on the other, and a spring-pressed latching device (shown clearly at 29 in Figs. 6 and 7) is furnished to retain the outer section or member 28^a of the prop-brace projected on the other member 28, the latter at its lower end being loosely clipped to the extensible member 28^a, as shown at *x* in Figs. 1 and 4. An extension-limb is furnished to coact with the prop-brace for the support of the mast at its front and thus counteract the strain imposed by suspension of a loaded cage from the outer end of the crane-arm. The extension-limb is composed of two parts 30 30^a, the latter, which is the outer member, being loosely fitted to slide in the inner member 30, and, as shown, member 30 is pivoted at its adjacent end to a projection from the lower mast-section 14.

The lower end of the inclined prop-brace is pivoted on the extensible member 30^a of the coacting limb preferably by a loose engagement with a clip-band *y*, that is clamped or otherwise secured on the limb-section 30^a. A ground-wheel 31 is rotatably supported on a spindle axially formed on the outer end of the extensible limb member 30^a and is adapted to rotate at right angles thereto. To facilitate transportation of the apparatus over a road-bed, the wheel 31 is preferably folded, so as to lie below and nearly parallel with the limb 30^a. To this end a rule-joint *z* is formed in the part 30^a near the spindle end of the same, which will flex downwardly, but prevent the member named from yielding upward or above its longitudinal axis.

When the parts 30 30^a are slid together so as to shorten the extensible limb they are members of and the wheel 31 is folded, as shown by dotted lines in Fig. 1, the wheel will clear the ground, and if the extensible limb has its member 30^a forwardly projected, as indicated by dotted lines in the same figure, the wheel 31, if moved so as to assume position at a right angle with the axis of the limb members 30 30^a, will have its periphery in position to contact with the ground. When the limb member 30^a has been extended as explained, the prop-brace that coacts with it will have its sliding member 28^a correspondingly extended.

The latching device for the prop-brace sections before mentioned consists of a rocking dog 29, loosely secured on the inner end and upper side of the sliding member 28^a, having its toe in engagement with a ratchet-toothed rack 29^a, formed along one top edge of the channeled brace member 28 and is normally pressed into contact therewith by a spring 29^b. There is an upright limb formed on the dog 29, which when vibrated toward the outer end of the prop-brace will remove the toe of said dog from the rack-teeth, and a flexible cord or chain 29^c extends from the upright limb forwardly, so as to be within reach of an operator on the ground at the side of the apparatus, for manipulation to release the dog when the extensible limb and prop-brace therefor are to be shortened, as shown by full lines in Fig. 1.

The apparatus may be operated by an electric motor, if desired; but it is preferred to supply energy for moving its working parts by a steam boiler and engine, which are stationed on the platform 15, as shown in Figs. 1 and 2, A representing the engine, B the boiler, and C coal-boxes, the engine being connected preferably by a band-wheel on its crank-shaft with a similar wheel 21^b on the outer end of the driving-shaft 21^a, whereon the drum 21 is secured. A shaft 26^a, that is supported to rotate above the platform 15 in axial alinement with the shaft 21^a, may be and preferably is adapted to be driven by said shaft through an ordinary friction-clutch device thrown into or out of action by a pivoted lever 26^b. (Shown in Fig. 2.) It is preferred to communicate rotary movement to the platform 15 by its geared connection with the engine A. To effect the connection mentioned, the shaft 26^a is extended to the side of the platform toward which it projects, and on said shaft, near the side edge of the platform, two friction-disks 1 and 2 are secured, the disk 2 being the outer one. An upright gear-shaft 3 is journaled in the platform 15, having a pinion 3^a secured on its lower end, meshing with the internal gear of the track-ring 12, as shown in Figs. 3 and 5. On the upper end of the shaft 3 a miter-gear 4 is af-

fixed in meshed engagement with a similar gear 5 on the horizontal shaft 5^a, which is supported to rotate from the platform 15, and on the end of the shaft 5^a which projects at the side of the platform a friction-wheel 5^b is secured.

Between the friction-disk 2 and friction-wheel 5^b an upright bracket-block 6 is held to slide on the platform 15, said block having two small friction-disks 6^a pivoted on its outer side near the upper end, which disks have their peripheries in frictional contact with each other, and, if lowered sufficiently, adjacent edges of said disks will respectively bear on the peripheral edges of the friction-disk 2 and wheel 5^b. The bracket-block 6 is also furnished with a friction-disk 6^b, that is pivoted on the outer side of the same below the center of the disk 2 and friction-wheel 5^b, so that an upward sliding movement of the bracket-block, which will remove the disks 6^a from the peripheries of the disk 2 and wheel 5^b, will cause the disk 6^b to have frictional contact therewith. An angle-lever 7 is pivoted on the platform 15 in such a position that its lower limb may project toward and be pivoted to the lower portion of the bracket-block 6, as shown in Fig. 1, the upright member of said lever being conveniently located for manipulation by an operator on the platform, and it will be apparent that if the lever is pressed forwardly at its upper end the friction-disks 6^a will be brought into enforced contact with the disk 2 and friction-wheel 5^b, so that rotary motion communicated by the source of power A to the shaft 21^a and thence to the alined and frictionally-connected shaft 26^a will be transmitted to the upright shaft 3 and pinion 3^a, which, acting on the stationary internal gear 12^a of the track-ring 12, will cause the platform 15 to swing or partly rotate in a direction corresponding with the direction of rotatable movement of the band-wheel 21^b on the end of the shaft 21^a, that has a belted connection 8 with a band-wheel 9 on the steam-engine shaft. It will also be evident that if the angle-lever 7 is rocked to lift the bracket-block 6 the enforced contact of the friction-disk 6^b with the disk 2 and wheel 5^b thus produced will transmit an opposite swinging movement to the platform 15.

The horizontal shaft h', whereon the long drum h is mounted, is rotatably sustained by boxes seated on the platform 15, and said shaft is extended toward the side of the platform whereon the angle-lever 7 is pivoted, having a friction-disk h^2 on this extension, which disk is opposite the friction-disk 1, and as the shaft extension having the disk h^2 on it is afforded slight lateral movement in its bearing at the end of the same it will be seen that the pressure of an upright lever h^3 on said shaft at the front of the latter will cause the disk h^2 to receive rotary motion from the shaft 26^a, which will wrap up the flexible connections b and k for an elevation of the mast-sections 12^a 12^b when this is desired.

In case of fire where the improved fire-escape is needed for service skilled operators in charge of the same man the apparatus, and with a team of draft-animals or by any other available power transport the entire device to the burning building. The portable boiler B should be fired up to provide steam for the engine A, so that when the apparatus is positioned at the fire for use the engine can be put in operation and the mast-sections 14^a 14^b immediately elevated by applied power, as before explained, the crane-arm having been previously drawn up into a horizontal position and secured with the cage 25, hung from its outer end ready for service.

By a proper manipulation of the lever 7 the platform 15 and the mast with its attached crane-arm and the cage may be swung on the stationary sill-frame 10, so as to project the cage 25 close to a window of the burning building or other point from which persons in peril are to be removed, and after the cage has received as many persons as it will contain the doors should be closed and the cage first swung away from the fire and then lowered by a reverse movement of the engine, or the clutch that connects the shaft 26^a with the shaft 21^a may be relaxed and the gravity of the cage and passengers allowed to cause a descent of the cage, the friction-brake for the drum 26 being applied to prevent too quick a downward movement. It will be seen that the ground-wheel 31, which has been brought into contact with the road-bed by an outward projection of the extension-limb 30 30^a and brace 28 28^a, will aid to sustain the weight of the pendent cage and its load and greatly facilitate the partial rotation of the mast while the latter is in service.

The rescued persons can quickly vacate the cage 25 when it is lowered after the mast has been turned so as to remove the cage from the fire to a point for its safe descent and said cage has reached the ground; when motion may be again communicated to the hoisting-rope of the cage to elevate it again, and the crane-arm may be swung by a rotatable movement of the platform 15 to again approach the burning building and receive another load of passengers that are to be rescued therefrom, if this is necessary.

When there is no longer need for use of the fire-escape apparatus at the scene of the conflagration, all its parts may be speedily folded into compact condition, as shown by full lines in Fig. 1, and the apparatus can then be returned to its place of storage, which may be a house specially provided for it.

Having thus described my invention, I claim as new and desire to secure by Letters Patent—

1. In an apparatus substantially as described, the combination of the mast, the prop-brace jointed at one end to the mast and made extensible and an extension-limb jointed at one end to the prop-brace, substantially as set forth.

2. In a portable fire-escape, substantially as described, the combination with a movable sill-frame, a mast-support thereon, and a flat track-ring fast on the sill-frame over said support, of a platform over the sill-frame and supported to rotate thereon by wheels pivoted on the platform and bearing on the track-ring, and a mast passing through the platform and resting with its lower end on the support, as specified.

3. In an apparatus substantially as described, the combination with the mast and the extensible prop-brace jointed at one end thereto, of the extension-limb jointed to said prop-brace and having at its outer end a ground-wheel, substantially as and for the purposes set forth.

4. In combination with the mast and the prop-brace, the limb-brace jointed to said prop-brace and having its outer section jointed to fold downward and a ground-wheel on said outer section, substantially as and for the purposes set forth.

5. The combination in an apparatus substantially as described, of the mast suitably supported whereby it may be revolved, the extensible prop jointed at its upper end to said mast, the extensible limb-brace jointed at its inner end to the mast and between its ends to the lower end of the prop-brace and provided with an outer downwardly-folding section and the ground-wheel on said outer section, all substantially as and for the purposes set forth.

6. In an apparatus substantially as described, the combination of the platform, the mast, the crane-arm jointed to said mast and having at its outer end a guide for the cage chain or cable, a guide for said chain or cable upon the mast, and the cage cable or support extended over the guide of the crane-arm thence over the guide on the mast and down to connect with the operating devices upon the platform, all substantially as and for the purposes set forth.

7. In a portable fire-escape, substantially as described, the combination with a movable sill-frame, a rotatable platform thereon, and means for rotating said platform, of an upright mast, a crane-arm pivoted thereon, means for raising the arm, a cage hung from said arm, an extensible limb jointed to the lower part of the mast, a prop-brace engaging the mast and limb, and a ground-wheel pivoted on the outer end of the extensible limb, as specified.

JOHN ALEXANDER DOBKINS.

Witnesses:
A. JACK ADAMS,
SAML. M. GARLAND.