Dec. 15, 1931. J. L. DRAKE 1,836,363

SHEET GLASS APPARATUS

Filed Sept. 23, 1926 2 Sheets-Sheet 1

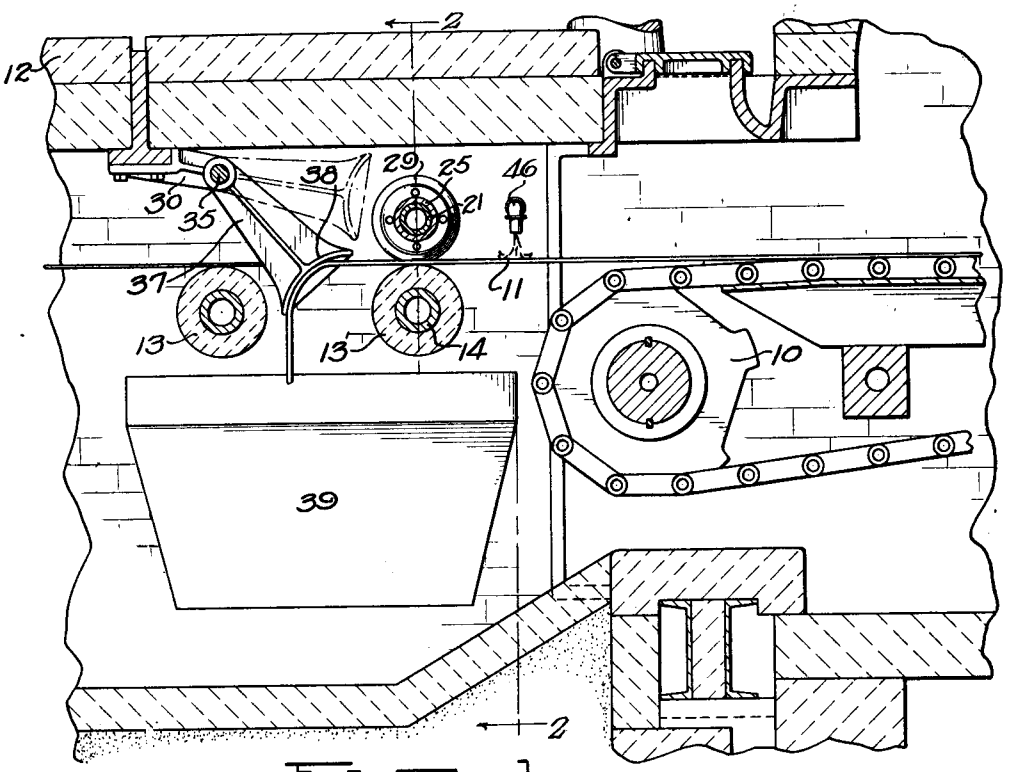

Fig. 1.

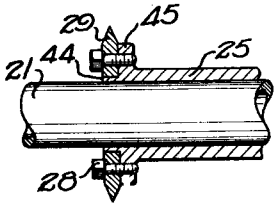

Fig. 4

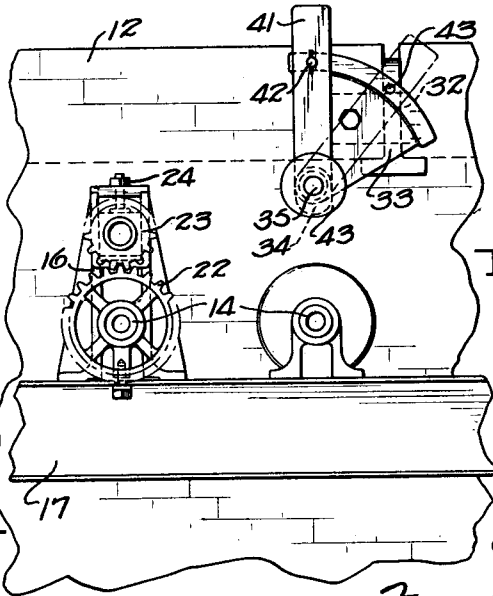

Fig. 3.

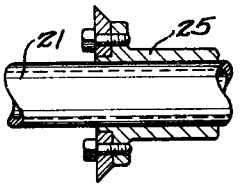

Fig. 5.

Inventor

John L. Drake

By Frank Fraser

Attorney

Dec. 15, 1931. J. L. DRAKE 1,836,363

SHEET GLASS APPARATUS

Filed Sept. 23, 1926 2 Sheets-Sheet 2

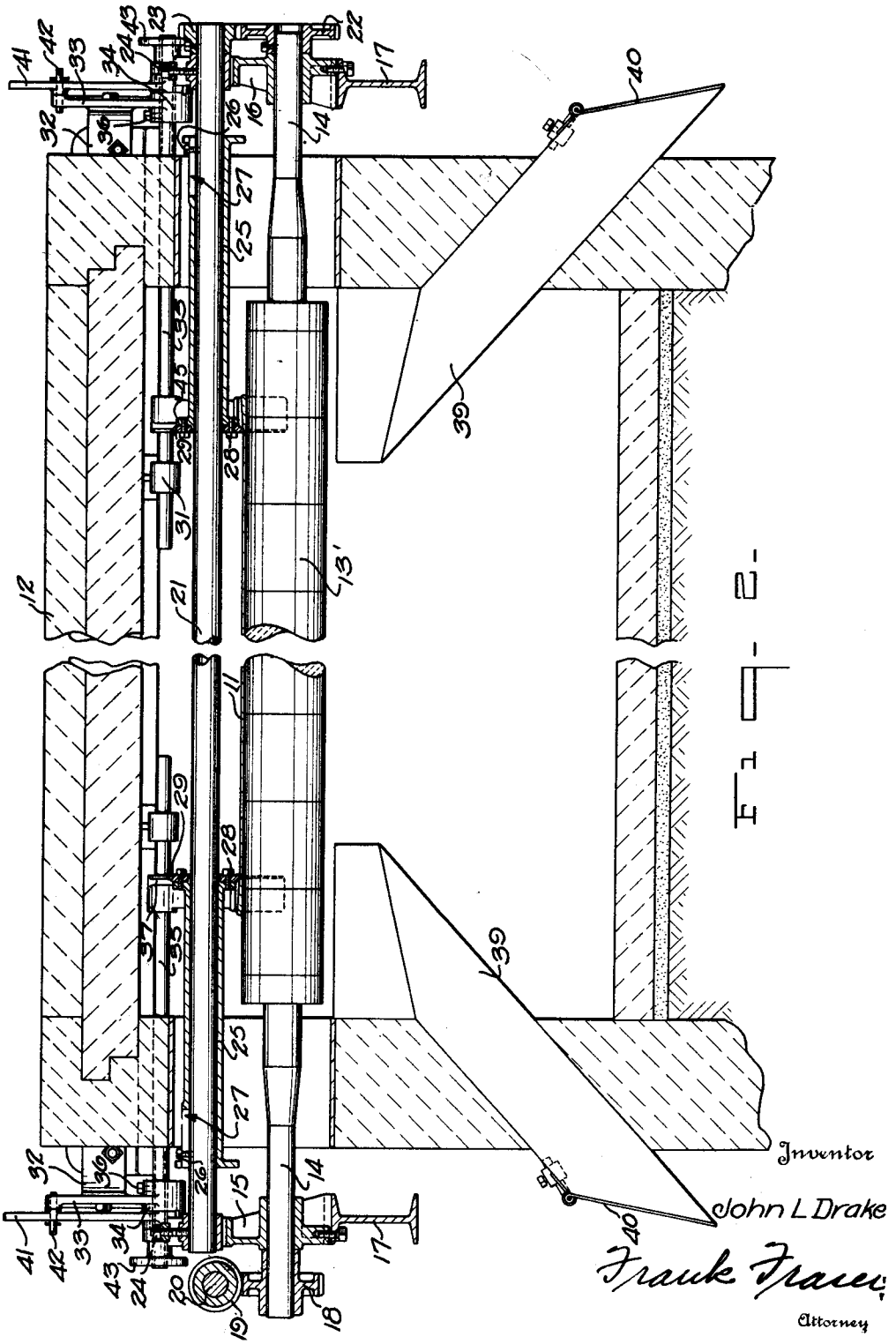

Patented Dec. 15, 1931 1,836,363

UNITED STATES PATENT OFFICE

JOHN L. DRAKE, OF TOLEDO, OHIO, ASSIGNOR TO LIBBEY-OWENS-FORD GLASS COMPANY, OF TOLEDO, OHIO, A CORPORATION OF OHIO

SHEET GLASS APPARATUS

Application filed September 23, 1926. Serial No. 137,222.

This invention relates to sheet glass apparatus, and more particularly to a method and apparatus for removing the edge or border portions of the sheet prior to the annealing thereof.

While this invention is not limited for use in connection with any specific type of sheet forming apparatus, yet it has been disclosed by way of illustration in connection with such an apparatus as set forth in the Colburn Patent No. 1,248,809, granted December 4, 1917, wherein a sheet of glass is initially drawn upwardly from a source of molten glass and subsequently deflected in a horizontal plane over a bending roll, after which the sheet is passed through suitable drawing or flattening and annealing mechanisms. In this machine means are also provided in the form of knurled rollers or the like to maintain the sheet to width, otherwise the said sheet will gradually narrow to a thread. These knurled rollers, however, cause a thickened portion to extend inwardly on the sheet a substantial distance from the edge thereof, and these edges are often roughened or marred so that it becomes necessary to trim off the same from the finished sheet.

Heretofore, it has been customary to trim off the edge portions of the sheet shortly after the sheet emerges from the leer onto the cutting table. However, due to the difference in thickness and temperature between the edge portions and main body of the sheet, together with the uneveness of the edge portions, I have learned that better annealing of the sheet can be achieved if the edge portions are removed from the main body of the sheet during the annealing thereof, preferably, although not necessarily, at the beginning of the annealing of said sheet.

Again, due to the increased thickness of the sheet edges, it has been found that considerable more time has been required to properly anneal the edges than the main body of the sheet, and consequently more time is now consumed in the annealing operation than would otherwise be the case were the edges removed during the annealing of the sheet.

It is, therefore, the primary object of the present invention to obtain a better annealing operation than heretofore.

Another important object of the invention is to obtain better and quicker annealing of the sheet with less breakage than with prior arrangements.

Another important object of the present invention is to accomplish this better annealing by providing means for removing the edge portions of the sheet, preferably at the beginning of the annealing operation and while the sheet is still in a semi-plastic condition.

Another important object of the invention is to provide means for cutting a sheet of glass along its border portions in a manner that the edges can be removed therefrom before said sheet and edges have become substantially set.

Another important object of the invention is to provide means of this nature wherein a sheet, having relatively thick border portions, is trimmed to remove the said border portions while the sheet is still in a semi-plastic condition and preferably at the intake or hot end of the annealing leer.

Another object of the invention is the provision of novel sheet cutting means capable of adjustment transversely of the sheet being drawn so that the amount of glass being trimmed off may be effectively controlled.

Another object of the invention is the provision of means for stripping off the edge portions from the sheet after the said sheet has been cut longitudinally and while still in a semi-plastic condition.

Another object of the invention is to provide means for deflecting the edge portions of the sheet out of the path followed by the body of the sheet after the cutting thereof.

Another object of the invention is to provide means for receiving and conveying the removed edge portions or waste glass exteriorly of the leer.

Another object of the invention is the provision of improved deflecting or stripping means which may also be adjusted transversely of the sheet being drawn.

A further object of the invention is the provision of means for moving the stripping

means into and out of the path of the sheet edges and for locking said means in desired position.

A still further object of the invention is the provision of novel edge removing means which may be readily associated with the Colburn machine referred to hereinabove without materially modifying the same.

Other objects and advantages of the invention will become more apparent during the course of the following description when taken in connection with the accompanying drawings.

In the drawings wherein like numerals are employed to designate like parts throughout the same,

Fig. 1 is a vertical longitudinal section through sheet glass apparatus embodying the present invention,

Fig. 2 is a vertical section taken substantialy on the line 2—2 of Fig. 1,

Fig. 3 is a side elevation of a portion of the annealing leer, and

Figs. 4 and 5 are detail sectional views showing two different forms of cutters which may be used in connection with the present invention.

Referring now more in detail to the drawings, the numeral 10 designates in its entirety a drawing mechanism of the type disclosed in the Colburn patent above referred to, and over which the glass sheet 11 passes after being deflected over the bending roll, not shown. This sheet 11 then passes into a leer or annealing chamber 12 where it is supported upon a plurality of horizontally alined rollers 13.

In accordance with this invention, the leer roller 13′ adjacent the drawing mechanism 10 is mounted upon a shaft 14 extending transversely of the leer and the opposite ends of which are journaled within brackets 15 and 16 supported upon suitable I-beams 17. The shaft 14 has keyed to one end thereof a gear 18 in constant mesh with a worm gear 19 mounted upon the drive shaft 20 so that upon rotation of the shaft 20, rotary movement will be transmitted to the shaft 14 and roller 13′.

Positioned directly above and in spaced parallel relation to the roller 13′ is a shaft 21, the opopsite ends of which are also journaled in the brackets 15 and 16. Mounted upon the shaft 14 is a drive pinion 22 in constant mesh with a gear 23 keyed to the shaft 21, and through this gear arrangement the shaft 21 is driven from the shaft 14. The shaft 21 is preferably mounted so that it can be adjusted relative to the shaft 14, and this can be readily accomplished by a suitable adjusting screw or other means 24.

Also mounted upon the shaft 21 are the means for cutting the sheet longitudinally adjacent its opposite edges as the said sheet passes into the annealing leer. Inasmuch as the cutting means at opposite edges of the sheet are exactly the same in construction, a detailed description of only one of the cutters is thought to be essential.

The cutting means embodies a sleeve 25 slidably mounted upon the shaft 21, and after being adjusted longitudinally thereof can be locked in the desired position by means of a lock screw 26 operating in a slot 27 in said sleeve. Secured to the inner end of the sleeve, by means of bolts or other suitable fastening elements 28, is a cutter 29. The cutter is preferably a high speed steel cutter, and is adapted to be operated at such a speed that the semi-plastic sheet is cut in a clean manner. By varying the size of the drive pinion 22 and gear 23, the speed of rotation of the shaft 21 and cutters 29 can be effectively regulated.

When it is desired to adjust the cutter transversely of the sheet, it is first necessary to raise the shaft 21 to disengage the cutters from the sheet, and this can be accomplished by the adjusting screw 24. After the cutters have been raised out of operative position in is only necessary to loosen the screw 26, slide the sleeve 25 in the desired direction on the shaft and subsequently tighten the said screw.

Supported by the roof of the leer at opposite sides thereof are brackets 30, each having formed integral therewith a bearing 31. Secured to the side walls of the leer is a second pair of brackets 32, each having formed integral therewith a substantially triangular plate 33 provided at its lower end with a bearing 34 in horizontal alignment with the adjacent bearing 31.

Journaled within each pair of bearings 31 and 34 is a shaft 35 upon which is mounted the means for stripping or removing the cut edge or border portions from the sheet. The shaft 35 is keyed against longitudinal sliding movement by means of a lock screw 36 carried by the bearing 34. The means for removing the cut edge portions consists of a stripping plate 37, the outer free end of which is provided with a lateral arcuately curved face 38. As clearly shown in Fig. 1, after the knurled edge has been cut from the sheet, the edge portion coming in contact with the face 36 will be deflected downwardly into the chute 39 which will convey the waste glass exteriorly of the leer. The outer lower ends of the chutes are normally closed by means of hinged doors 40.

Should it be desired to permit the edge portions to be carried along with the sheet through the leer and thus annealed therewith, the stripping plates can be swung upwardly and out of the path of the sheet edges, and in order to accomplish this there is slidably keyed to each shaft 35 an arm 41. Upon swinging this arm in the desired direction, the plate 37 can be raised or lowered as preferred. The arm 41 is provided with a pin

42 adapted to engage within openings 43 formed in the plate 33, whereby to retain the stripping plate 37 in the desired direction.

In Figs. 4 and 5 have been disclosed two different forms of cutters which may be used in connection with the present invention. Each of the cutters consists of a ring 29 adapted to fit over the reduced end 44 of the sleeve 25 and to be secured to an annular flange 45 formed on said sleeve by means of suitable fastening elements 28.

In the operation of the invention, it will be seen that as the glass sheet 11 passes between the leer roller 13′ and the cutters 29, the same will be cut longitudinally by the said cutters. As the edge portions of the sheet come in contact with the faces 38 on the plates 37, the said edge portions will be deflected downwardly into the receptacles or chutes 39 and carried exteriorly of the leer.

Thus, it will be seen that the cutters 29 cooperate with the leer roller 13′ to effectively cut the sheet longitudinally at the beginning of the annealing operation while the same is still in a semi-plastic state, and that the cut edge portions can be removed before becoming set or they can be annealed and then removed, as desired. If desired, for one reason or another, the shaft 21 can be moved upwardly away from the leer roller 13′ by means of the adjusting screws or other means 24 whereby to disengage the cutters 29 from the sheet 11.

Should it be found desirable to adjust the position of the cutters, the stripping plates should be correspondingly adjusted, and this can be accomplished by simply first loosening the set screws 36, and subsequently sliding the shafts 35 in the desired direction. Thumb pieces 43 are provided to facilitate the sliding of the shafts 35. Positioned above the sheet 11, slightly in advance of the cutters 29, is a burner 46 provided to control the temperature of the sheet at this point. This burner serves to retain the sheet at a predetermined consistency so that the said sheet will be cut in a clean manner by the cutters 29. This burner may or may not be used, as preferred.

The arrangement of the cutting and stripping devices is preferably such that the edge or border portions are removed from the sheet immediately after its entrance into the leer. The knurled edges have served the purpose for which they were intended when the leer is reached and there is no necessity for them thereafter. In fact, these edges prove detrimental to efficient annealing as their temperature and thickness is different from the temperature and thickness of the main body of the sheet. Obviously, such conditions, if permitted to remain, cause irregular and ununiform expansion and contraction of the sheet, sometimes resulting in breakage.

By employing my invention, the edge portions are removed so that a sheet of substantially uniform thickness and temperature is left to be annealed. Such a sheet can be more easily handled, and therefore better and quicker annealing with less breakage occurs. The sheet at the intake or hot end of the leer is in a semi-plastic condition and it is while the sheet is in this condition that I prefer to remove the edge portions.

As the cutters are high speed steel, and as the temperature thereof can be accurately controlled, the edges of the sheet can be removed from the body thereof without tearing or injuring said sheet. The stripping plates 37, in combination with the chutes 39 or other suitable conveyors, automatically takes care of the edges after the removing thereof, thus preventing an accumulation of broken glass, from this cause, in the bottom of the leer.

It is to be understood that the form of the invention herewith shown and described is to be taken as the preferred embodiment of the same, and that various changes in the shape, size and arrangement of parts may be resorted to without departing from the spirit of the invention or the scope of the subjoined claims.

Claims:

1. In sheet glass apparatus, means for cutting the sheet longitudinally, means independent of the cutting means for removing the edge portions of the sheet after cutting and while in a semi-plastic state, and means for moving said edge removing means through an arcuate path into and out of the path of the sheet edges.

2. In sheet glass apparatus, the combination of a leer, adjustable means for cutting the sheet longitudinally within the leer, adjustable means also within the leer for subsequently deflecting the edge portions out of the path travelled by the main body of the sheet, and means for moving said deflecting means through an arcuate path into and out of the path of the sheet edges.

3. In sheet glass apparatus, an annealing leer for receiving a continuously moving sheet traveling in a generally horizontal direction, a plurality of spaced rotatable members within the leer for supporting the sheet and carrying the same therethrough, a pair of rotatable discs arranged above the sheet and cooperating with one of said rotatable members for cutting the edge portions from the sheet while the same is in a semi-plastic condition, and a pair of stripping plates having arcuate faces for deflecting the cut edge portions out of the path followed by the main body of the sheet before said edge portions have become set.

4. In sheet glass apparatus, means for carrying the sheet in a predetermined direction, means for cutting the sheet longitudinally, means for subsequently deflecting the cut edge portions out of the path travelled by the main body of the sheet, and means for moving said

deflecting means through an arcuate path into and out of the path of the sheet edges.

5. In sheet glass apparatus, a plurality of spaced rotatable members for supporting the sheet and carrying the same in a predetermined direction, rotatable discs for cutting the edge portions from the sheet while the same is in a semi-plastic condition, and stripping members having curved faces for deflecting the cut edge portions out of the path followed by the main body of the sheet before the said edge portions have become set.

6. In sheet glass apparatus, the combination with means for carrying a relatively newly formed sheet of glass in a definite predetermined path, of means for cutting the sheet longitudinally along its border portions, including a pair of rotatable discs positioned to operate upon the sheet while it is in a semi-plastic condition, and stationary means disposed in the path of travel of the sheet for removing the border portions before they have become set.

7. In sheet glass apparatus, the combination with means for carrying a relatively newly formed sheet of glass in a definite predetermined path, of means for cutting the sheet longitudinally along its border portions, including a pair of rotatable discs positioned to operate upon the sheet while it is a semi-plastic condition, and stationary means disposed in the path of travel of the sheet for deflecting the border portions thereof downwardly out of the path traveled by the main body of the sheet while said border portions are still in a semi-plastic condition.

8. In sheet glass apparatus, the combination with means for carrying a relatively newly formed sheet of glass in a definite predetermined path, of means for cutting the sheet longitudinally along its border portions while in a semi-plastic condition, means for deflecting the border portions out of the path traveled by the main body of the sheet before they have become set, a pivotal mounting for the deflecting means, and means for swinging said deflecting means about its pivot into and out of the path of said border portions.

9. In sheet glass apparatus, the combination with means for carrying a relatively newly formed sheet of glass in a definite predetermined path, of means for cutting the sheet longitudinally along its border portions while in a semi-plastic condition, means for deflecting the border portions out of the path traveled by the main body of the sheet before they have become set, a pivotal mounting for the deflecting means, and means for swinging said deflecting means about its pivot into and out of the path of said border portions, said deflecting means having an arcuately curved face for directing the border portions downwardly.

10. In sheet glass apparatus, the combination with means for carrying a relatively newly formed sheet of glass in a definite predetermined path, of means for cutting the sheet longitudinally along its border portions while in a semi-plastic condition, and stationary means disposed in the path of travel of the sheet for removing the border portions before they have become set.

Signed at Toledo, in the county of Lucas and State of Ohio, this 18th day of September, 1926.

JOHN L. DRAKE.