(No Model.)

G. GIBSON.

WINDOW SASH ATTACHMENT.

No. 590,645. Patented Sept. 28, 1897.

Fig. 1.

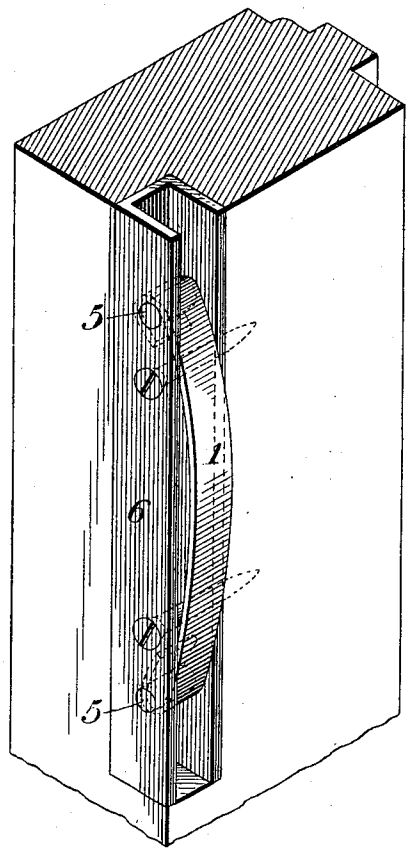

Fig. 2.

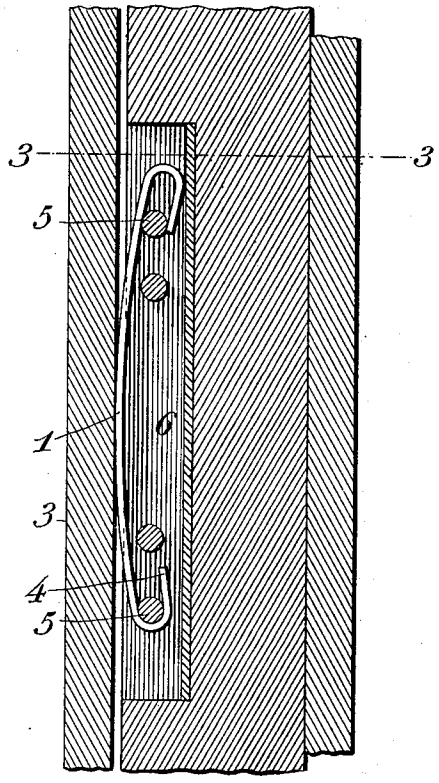

Fig. 3.

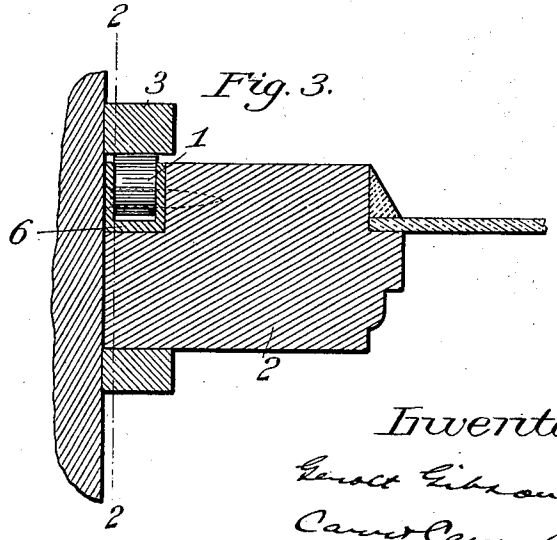

Witnesses.

J. W. Segar

T. Percy Carr

Inventor.

Gerald Gibson, by

Carr & Carr, Attys.

THE NORRIS PETERS CO., PHOTO-LITHO., WASHINGTON, D. C.

UNITED STATES PATENT OFFICE.

GEROLT GIBSON, OF ST. LOUIS, MISSOURI.

WINDOW-SASH ATTACHMENT.

SPECIFICATION forming part of Letters Patent No. 590,645, dated September 28, 1897.

Application filed February 12, 1897. Serial No. 623,063. (No model.)

To all whom it may concern:

Be it known that I, GEROLT GIBSON, residing in the city of St. Louis, State of Missouri, have invented a new and useful Window-Sash Attachment, of which the following is a specification.

When window-sashes fit loosely in their frame, the wind is liable to cause them to rattle and to blow dust into the house.

The object of my invention is to overcome this liability; and it consists in the device hereinafter described and claimed.

In the accompanying drawings, which form part of this specification, like symbols refer to like parts in the several views.

Figure 1 is a perspective view of my device mounted on a window-sash. Fig. 2 is a vertical section through a sash-frame on the line 2 2 of Fig. 3. Fig. 3 is a horizontal section on the line 3 3 of Fig. 2.

The principal element of my device is a flat spring 1, adapted to be mounted on the window-sash 2 in position to bear against the blind-stop 3. This flat spring 1 has an elongated loop or hook 4 at each end adapted to fit over pins or studs 5, fixed in a casing or housing 6. The spring 1 is curved so as to have its middle portion extend outwardly beyond the edges of the casing. The casing with the spring thus mounted therein is fastened to the vertical edge of the sash, the edge portion of said sash being mortised out to allow said casing to be countersunk flush with the faces of the sash. One or more of these springs are thus mounted on the outer edge of each side of the upper sash in position to bear against the blind-stop 3.

The operation of the device is as follows: The spring in its normal condition is bowed or bent so that its ends come as close together as the pins or studs will permit. Lateral pressure on the middle portion, which projects beyond the casing, causes the ends to separate, such separation being permitted by the elongated loops. When the upper sash is placed in the window-frame, the springs thereon bear against the blind-stops, and their reaction holds the sash firmly against the parting-strip and thereby prevents rattling and at the same time closes the crack to keep out the wind and dust. When the sash is lowered, the spring may slip until the lower hook strikes its corresponding stud, from which time it acts like a spring fastened at the lower end and free at the top. In the upward movement the reverse action takes place, and it acts like a spring fastened at the upper end and free at the lower end, the studs being located far enough from the ends of the housing or sockets to permit the endwise movement of the spring. Thus in both its upward and its downward movement the device has the advantages of a spring fixed at one end and free at the other and is not subject to the danger of buckling to which a free-ended spring is liable in one direction and a spring fixed at both ends is liable in both directions.

Obviously my device may be mounted on either the upper or the lower sash or on the window-frame instead of on the sash.

What I claim as new, and desire to secure by Letters Patent, is—

1. A window-sash attachment consisting of a housing having two studs therein and a spring bowed outwardly beyond said housing and having loops at its ends hooking over said studs, said studs being respectively located far enough from the ends of the housing to permit endwise movement of the spring and said loops being long enough to allow necessary play without altering their operative relation to said studs, all substantially as and for the purpose set forth.

2. A window-sash attachment consisting of a housing, a spring therein bowed outwardly beyond said housing, and stops in said housing arranged to allow the ends of said spring to separate but to limit their approach, substantially as and for the purpose set forth.

3. A window-sash having a socket in its edge and a spring in said socket, said spring being bowed outwardly beyond the face of the sash in position to bear against the stop or parting-strip and having loops at its ends adapted to hook over studs arranged transversely in said socket therefor, said loops being long enough to allow necessary play without altering their operative relation to said studs, substantially as and for the purpose set forth.

GEROLT GIBSON.

Witnesses:
JAMES A. CARR,
CHARLES PICKLES.