Oct. 17, 1967 J. M. STROBEL ETAL 3,347,710

METHOD OF MAKING SEALED ELECTRIC BATTERIES

Filed July 1, 1965

Fig. 1

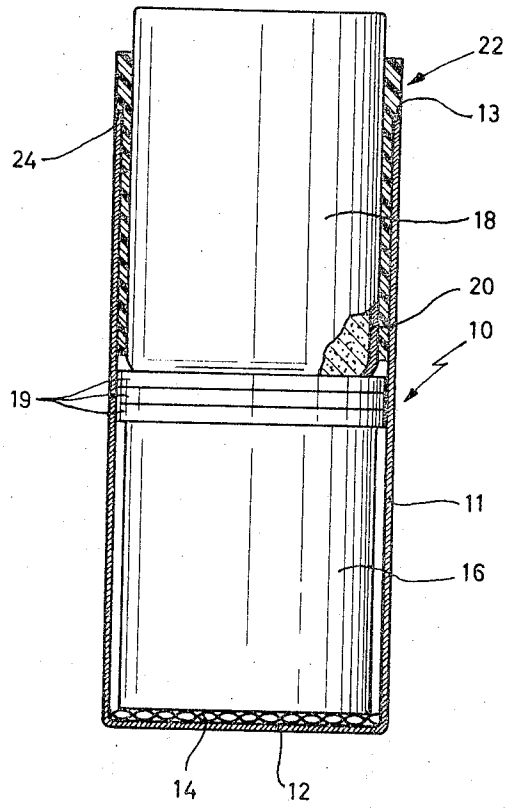

Fig. 2

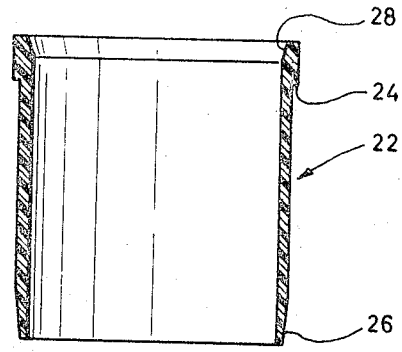

INVENTORS
JOSEF M. STROBEL
BERNHARD HAAS

BY Davis, Hoxie, Faithfull & Hapgood
ATTORNEYS

United States Patent Office

3,347,710

Patented Oct. 17, 1967

3,347,710

METHOD OF MAKING SEALED ELECTRIC BATTERIES

Josef M. Strobel and Bernhard Haas, Pforzheim, Germany, assignors to The United States Time Corporation, Waterbury, Conn., a corporation of Connecticut

Filed July 1, 1965, Ser. No. 468,773
Claims priority, application Germany, Nov. 4, 1964, U 11,181
2 Claims. (Cl. 136—175)

ABSTRACT OF THE DISCLOSURE

This invention is a method of sealing a battery to prevent gas and liquid leakage. The battery consists of two metal open-ended cans or cups, one larger than the other, chemical battery material and a plastic tubular seal. The assembly takes place in a vacuum by filling one cup with the battery material, placing the plastic tube over the cylindrical wall of the smaller can, and forcing the larger can down over the tube.

The invention relates to an electric primary cell or a storage battery and a process for its production.

The construction according to the present invention finds its application mainly in very small primary cells or storage batteries. Such batteries are used in wrist watches and hearing aids. The proper sealing of such very small cells has been difficult and intricate.

In accordance with the present invention, an outer larger metal cup, open at its top, has in its lower part a pill of chemically reactive material which is electrically connected with the bottom. A second smaller metal cup open at its bottom has within it a second chemically reactive pill. A plastic intermediate tube, for insulation and sealing, is positioned between the two metal containers. The tube is under radial pressure, preferably over its entire length.

The construction avoids a crimping process. The radial compressing of the tube between the two containers gives a simple and safe sealing of their contents.

According to the present invention, the outside diameter of the intermediate plastic tube is larger than the inside diameter of the larger metal cup in order to obtain radial pressure on the tube. In this construction it is sufficient to press fit the single parts together to obtain the radial pressure on the tube and sealing.

According to the method of the present invention, the assembly and casing of the pills, containers and tube occurs in a vacuum. This presents overpressure in the interior of the hermetically closed cell. The presence of empty spaces (an under pressure) has a favorable effect because, when the outer sealing vacuum is ended, the tube and the cups are drawn into the interior.

A preferred embodiment of the present invention is shown in the attached drawing. Other characteristics and advantages of the present invention will be apparent from the drawing and description. In the drawing:

FIG. 1 is a partially cut-away side view of a battery cell according to the present invention with the tube and bottom cup shown in sectional view; and

FIG. 2 is a cross section taken through the intermediate plastic tube prior to its insertion between the containers.

As shown on FIG. 1, the bottom metal cup (can or container) **10** includes a cylindrical shell **11**, a shell bottom **12**, and a top shoulder **13** on its outer edge. A mesh

metal disc **14** rests against the inside of the shell bottom **12**. Disc **14** in free condition is convexly curved (dome shaped), however, in assembled condition it adopts a plane shape, as shown in FIG. 1. An inner chemically reactive pill **16** is positioned on top of the mesh metal disc **14**. An upper chemically reactive pill **18** is positioned in metal cup (container) **20**. Several separators **19** are provided between the pills **18** and **16**.

An intermediate plastic tube **22** electrically insulates cup **20** from cup **10**.

The wall thickness of the tube **22**, according to the invention, is preferably smaller than 0.3 mm. An advantageous construction results from a wall thickness of the intermediate tube of 0.2 mm. The intermediate tube **22** has preferably a length of at least 44 mm. in order to obtain good sealing between the metal containers. A particularly favorable plastic for the intermediate tube **22** is poly-tetra fluoro-ethylene (PTFE) such as Du Pont's Teflon T.M. It has high elasticity and provides very good insulation and sealing.

The intermediate tube **22** rests with its shoulder **24** against the top shoulder **13** of the metal cup **10**. Tube **22**, in free condition (see FIG. 2), has a tapered outer rim **26** on its lower end and a tapered inner rim **28** on its upper end. Both these rims are no longer noticeable in FIG. 1 because the intermediate tube, after insertion between the containers is transformed and stretched. Seen in its entirety, the intermediate tube **22** after insertion is under stress in the longitudinal direction.

To assemble the cell, the parts are placed in a vacuum chamber with a vacuum of at least 100 Torr. Then, the upper cup is pressed down into tube **22**. The tube, with cup **20**, is then pressed into cup **10**. The intermediate tube is slightly stretched during the press fit of the inner can **18**. The shell **11** of the metal cup **10** and the metal cup **20** exert radial pressure against the intermediate tube **22**. This pressure causes the intermediate tube to be compressed and to remain under a continuous stress.

By this construction a relatively good sealing of the pills is obtained; the upper cup is sealed against the lower metal cup; and the entire content of the cell is sealed from the exterior.

The cell may either be a primary cell or a storage battery depending upon the chemical materials used in pills **16** and **20**.

We claim:

1. The process of sealing a battery consisting of an outer metal cylindrical cup closed at one end, an inner metal cylindrical cup closed at one end, chemically reactive battery material, and a plastic tubular sealing and insulating member whose outer diameter is greater than the inner diameter of the outer can; the steps consisting of forming a vacuum around the parts to be assembled, placing the chemical material in the inner can, placing the tube over the inner can, and forcing the outer can over the tube by pressure on the said cans.

2. The process as in claim **1** wherein the vacuum is at least 100 Torr.

References Cited

UNITED STATES PATENTS

2,571,616	10/1951	Ruben	136—107 X
2,636,063	4/1953	Schroeder	136—133
2,843,650	7/1958	Jacquier	136—133 X

WINSTON A. DOUGLAS, *Primary Examiner.*

D. L. WALTON, *Assistant Examiner.*