June 4, 1935. R. M. TUCKER 2,004,021

FEEDING MECHANISM FOR CUTTING MACHINES

Filed Oct. 25, 1933 2 Sheets-Sheet 1

Fig. 1.

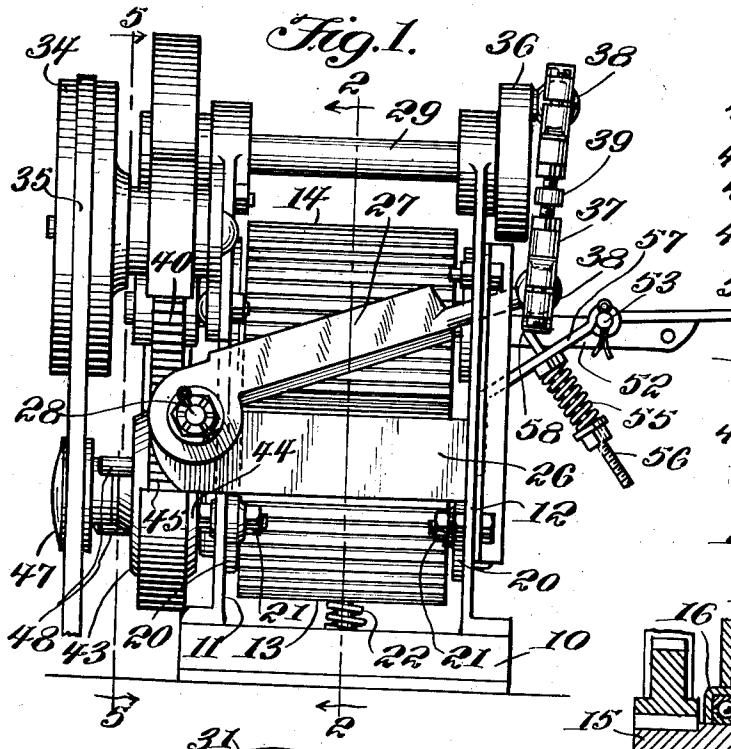

Fig. 9.

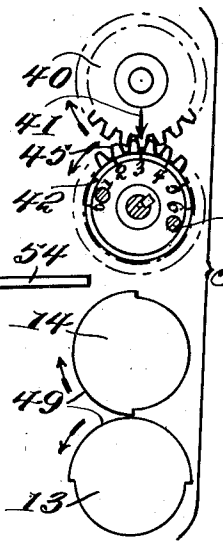

Fig. 2.

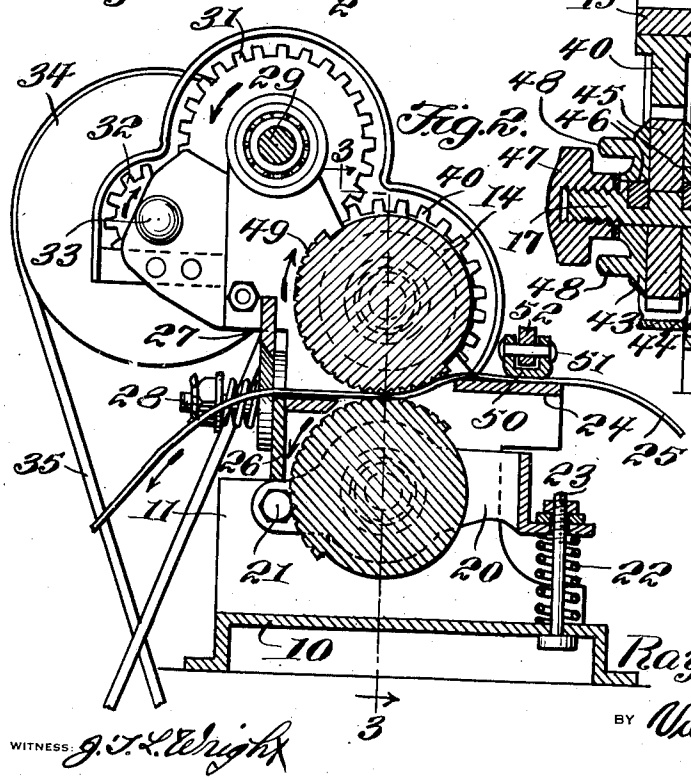

Fig. 3.

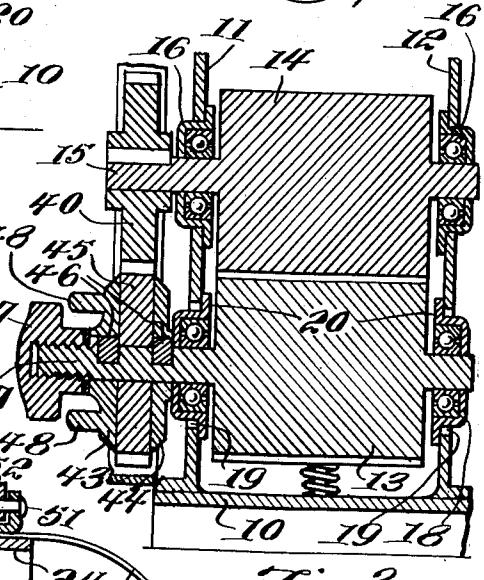

Raymond M. Tucker
INVENTOR

BY Victor J. Evans & Co.
ATTORNEY

WITNESS: J. T. L. Wright

June 4, 1935. R. M. TUCKER 2,004,021

FEEDING MECHANISM FOR CUTTING MACHINES

Filed Oct. 25, 1933 2 Sheets-Sheet 2

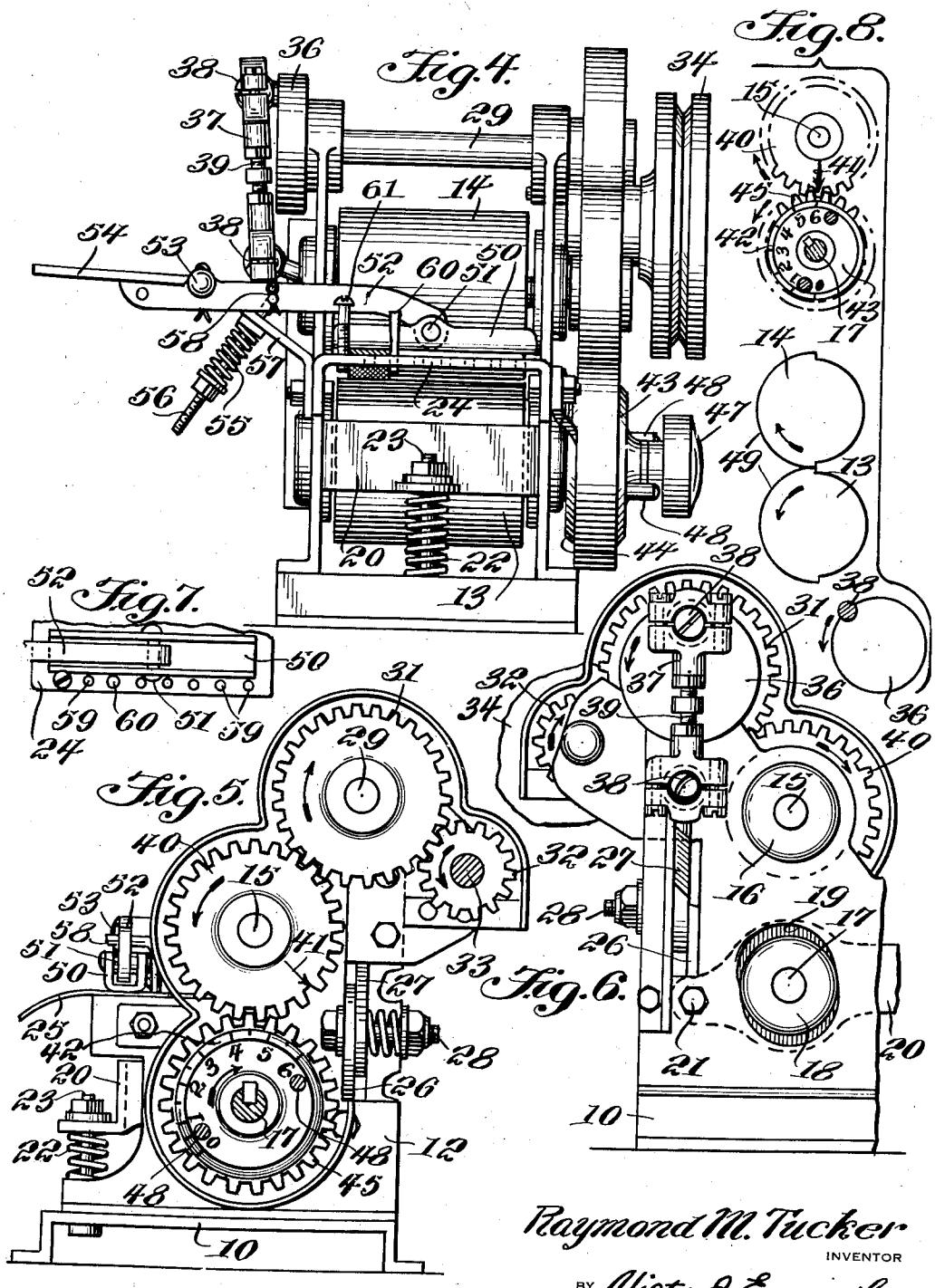

Raymond M. Tucker
INVENTOR

BY Victor J. Evans & Co.
ATTORNEY

WITNESS: J. L. Wright

Patented June 4, 1935

2,004,021

UNITED STATES PATENT OFFICE

2,004,021

FEEDING MECHANISM FOR CUTTING MACHINES

Raymond M. Tucker, Sherman, Tex.

Application October 25, 1933, Serial No. 695,189

3 Claims. (Cl. 271—2.4)

The invention relates to a cutting machine and more especially to a machine which automatically measures and cuts continuous strips of various kinds of material, such as webbing, braids, hatbands, bindings, tapes, belt loops, knit tubing, etc.

The primary object of the invention is the provision of a machine of this character, wherein a strip of material can be accurately cut into predetermined lengths and such length of cuts determined in the automatic operation of the machine the machine being of novel construction to assure convenience in the setting thereof for the measuring of the material for its length of cut and the cutting thereof with accuracy and without manual labor.

Another object of the invention is the provision of a machine of this character, wherein the material to be cut in required lengths is fed therein with smoothness and under tension, so that the cut pieces will be uniform in conformity with the setting of the measured lengths for the cutting operation.

A further object of the invention is the provision of a machine of this character which is comparatively simple in construction, thoroughly reliable and efficient in its purpose, eliminating manual labor and requiring but a single attendant, readily and easily adjusted, strong, durable, and inexpensive to manufacture.

With these and other objects in view, the invention consists in the features of construction, combination and arrangement of parts as will be hereinafter more fully described in detail, illustrated in the accompanying drawings, which disclose the preferred embodiment of the invention, and pointed out in the claims hereunto appended.

In the accompanying drawings:

Figure 1 is a front elevation of the machine constructed in accordance with the invention.

Figure 2 is a sectional view on the line 2—2 of Figure 1 looking in the direction of the arrows.

Figure 3 is a fragmentary sectional view on the line 3—3 of Figure 2 looking in the direction of the arrows.

Figure 4 is a rear elevation of the machine.

Figure 5 is a side view partly in section taken on the line 5—5 of Figure 1 looking in the direction of the arrows.

Figure 6 is a fragmentary side elevation of the machine showing in detail the manner of adjustment of the movable cutter blade.

Figure 7 is a fragmentary plan view in detail of the material presser and adjuncts.

Figure 8 is a diagrammatic plan view showing the relation of the measuring mechanism, the throw of the movable cutter blade and the feed roller for the material when the measuring parts are set for a maximum or full length cut of material.

Figure 9 is a similar view to Figure 8 showing a change of position of the feed rollers for a measured length of cut material of three inches, the full length cut being six inches.

Similar reference characters indicate corresponding parts throughout the several views in the drawings.

Referring to the drawings in detail, the machine comprises a bed 10 from which rise vertically the side castings or frames 11 and 12, respectively, these being spaced apart the required distance from each other to accommodate therebetween the upper and lower feed rollers 13 and 14, respectively, the axle 15 of the latter being suitably journaled in bearings 16 in said castings or frames, while the axle 17 of the roller 13 is fitted in bearings 18 displaceable in ways 19 in said castings or frames 11 and 12 so that the relation of the rollers 13 and 14 with respect to each other, under feeding action, can be varied.

Swingingly connected to the castings or frames 12 is a tensioning yoke 20 having its side arms hinged by the pivots 21 to said castings or frames and this yoke accommodates the bearings 18, while active against the yoke 20 is a tensioning spring 22 urging it in a direction for the disposing of the lower roller 13 next to the upper roller 14 and to maintain such roller 13 under tension at all times. Passed through the spring 22 is a fastener 23 which limits the swinging of the yoke 20 under the tension of the spring 22, as will appear in Figure 2 of the drawings.

Arranged between the castings or frames 11 and 12 is a guide platform or bed 24 for the strip material 25 fed through the machine, the bed 24 being cut away for the confronting of the feed rollers 13 and 14 with each other to have them act upon the strip material 25 for the feeding thereof to the cutting mechanism hereinafter described.

The platform or bed 24 at the front of the machine has formed therewith or fitted thereto a stationary cutting blade 26 with which cooperates a movable cutting blade 27 swingingly supported upon a pivot 28 at one end thereof and these blades in the working of the machine sever the material 25 according to the desired length on the setting of the machine.

In the castings or frames 11 and 12 above the upper roller 14 is a driven shaft 29 having the

gear 31 thereon meshing with a pinion 32 upon the axle 33 of a belt wheel 34, the axle 33 being journaled in the casting or frame 11, and a power belt 35 is trained over the wheel 34, which belt is operated from any suitable source of power.

The shaft 29 has fitted thereto a crank 36 which through the connector 37 reciprocates blade 27. This connector 37 includes the universal couplings 38 on both the blade 27 and the crank 36 and the adjusting screw 39 therebetween so that said connector can be lengthened and shortened to regulate the proper cutting action of the blade 27 in its cooperation with the blade 26.

The axle 15 of the roller 14 has splined or keyed thereto a gear 40 meshing with the gear 31 and this gear 40 carries a pointer 41 for the coaction therewith of a measuring dial face 42 of the outer part 43 of a clutch, this part 43 and the other part 44, of the clutch being mounted upon the axle 17 of the roller 13 for clamping and unclamping of a gear 45 to and from said axle 17, the parts 43 and 44 being splined at 46 with the axle 17, as is shown in Figure 3 of the drawings. This gear 45, loose upon the axle 17 when unclamped and fast thereon when clamped, is in mesh with the gear 40. The axle 17 has threaded thereon a binding nut or knob 47 cooperating with the clutch to render the same effective for the clamping and unclamping of the gear 45 fast and loose on the shaft 17. The clutch part 43 has formed therewith diametrically opposed finger lugs 48 which facilitate the turning of the axle 17 when the gear 45 is free thereon so as to set the roller 13 relative to the roller 14 for the varying of the feeding action of these rollers in advancing the material 25 to the cutter. The rollers 13 and 14 are of the mutilated type providing the half-circular raised roughened or corrugated feed portions 49 which, when changed with respect to their extent, control the length of feed of the material 25 for the cutting of said material into strips of determined length from one-quarter inch to six inches, although this can be varied according to the make-up of the feed roller.

At the introductory side of the machine for the passing of the material 25 thereinto between the rollers 13 and 14 is a tensioning or braking device which comprises a presser bar 50 carrying intermediate the ends thereof the pivot 51 connecting it with a tensioning arm 52 swingingly supported by the pivot 53 provided with an outer handle end 54, the arm 52 being tensioned by a spring 55 upon an adjusting stem 56 working through a hanger 57 and pivoted at 58 to said arm 52. The presser bar 50 overhangs the platform 24 to frictionally contact with the material 25 to regulate the advancement thereof into the machine and to sustain it under tension when feeding action is had thereon by the rollers 13 and 14 to eliminate the crowding of the material or the overfeeding thereof in the machine.

The manner of relating the feed rollers 13 and 14 by the measuring mechanism of the machine is clearly exhibited in Figures 8 and 9 of the drawings and likewise the disposition for the cutting action by the blade 27 as to the stroke of the latter for assuring accuracy in the cutting of the material 25 into determined lengths of strips. It is apparent that the eccentric 36 has its pivot point of connection with the connector 39 off center in advance of the starting point of the cycle of rotation of the feed rollers 13 and 14 so that the cutting action will be synchronous with the feeding action of the rollers 13 and 14 according to the cut of strip of a determined length automatically in the working of the machine.

The roller 13 is manually turned to alter the portion 49 thereof with the companion portion of the roller 14 for the setting of these rollers in conformity with the length of cut of strip desired under the automatic working of the machine.

The platform or bed 24 transversely of the machine next to the presser bar 50 has provided therein spaced openings 59 for accommodating a gage pin 60 which can be selectively engaged with any of the openings 59 to set the same according to the width of the material 25 to be delivered to the machine for the guiding of such material in the feeding of the same for the automatic measuring and cutting operation thereof. Adapted for cooperation with the gage pin 60 is an abutment 61 which is in the form of a screw engaged in the platform or bed 24 and one edge of the material when introduced to the machine between the parts 60 and 61 will contact with both the screw and said pin for the proper guiding of the material in the automatic feeding thereof.

What is claimed is:

1. A machine of the character described comprising a frame, upper and lower feed rollers therein, fixed bearings for one of the rollers, displaceable bearings for the other roller, a tensioning yoke mounted on the frame and having connection with the displaceable bearings and adapted for swinging movement, means for tensioning the said yoke to urge one roller toward the other and maintain it under tension, means for limiting the swing of the yoke, a guide platform for strip material arranged to one side of the rollers and in a plane to have the strip material pass therebetween, a presser bar overhanging the platform, a tensioning arm swingingly supported and pivoted to said presser bar, means regulating the tension of the presser bar, a gear on an axle of one of the rollers, a gear on an axle of the other roller, one gear being loose and the other fixed, a pointer on the fixed gear, a two-part clutch for clamping and unclamping the loose gear, a measuring dial on the outermost part of said clutch and cooperating with the pointer, and a hand knob cooperating with the clutch for rendering the same ineffective for clamping and unclamping action.

2. A machine of the character described comprising a frame, upper and lower feed rollers therein, fixed bearings for one of the rollers, displaceable bearings for the other roller, a tensioning yoke mounted on the frame and having connection with the displaceable bearings and adapted for swinging movement, means for tensioning the said yoke to urge one roller toward the other and maintain it under tension, means for limiting the swing of the yoke, a guide platform for strip material arranged to one side of the rollers and in a plane to have the strip material pass therebetween, a presser bar overhanging the platform, a tensioning arm swingingly supported and pivoted to said presser bar, means regulating the tension of the presser bar, a gear on an axle of one of the rollers, a gear on an axle of the other roller, one gear being loose and the other fixed, a pointer on the fixed gear, a two-part clutch for clamping and unclamping the loose gear, a measuring dial on the outermost part of said clutch and cooperating with the pointer, a hand knob cooperating with the clutch for rendering the same ineffective for clamping and unclamping action, and opposed finger lugs on the outermost part of said clutch for actuating the said clutch for altering the feed of the feed rollers.

3. A machine of the character described comprisin a frame, upper and lower feed rollers therein, fixed bearings for one of the rollers, displaceable bearings for the other roller, a tensioning yoke mounted on the frame and having connection with the displaceable bearings and adapted for swinging movement, means for tensioning the said yoke to urge one roller toward the other and maintain it under tension, means for limiting the swing of the yoke, a guide platform for strip material arranged to one side of the rollers and in a plane to have the strip material pass therebetween, a presser bar overhanging the platform, a tensioning arm swingingly supported and pivoted to said presser bar, means regulating the tension of the presser bar, a gear on an axle of one of the rollers, a gear on an axle of the other roller, one gear being loose and the other fixed, a pointer on the fixed gear, a two-part clutch for clamping and unclamping the loose gear, a measuring dial on the outermost part of said clutch and cooperating with the pointer, a hand knob cooperating with the clutch for rendering the same ineffective for clamping and unclamping action, opposed finger lugs on the outermost part of said clutch for actuating the said clutch for altering the feed of the feed rollers, and cooperative stationary and adjustable guides on said platform.

RAYMOND M. TUCKER.