Oct. 15, 1929. F. S. BOLTZ 1,731,290

DRYING, WASTE HEAT RECOVERY, AND COOLING SYSTEM

Filed Dec. 19, 1927 4 Sheets-Sheet 1

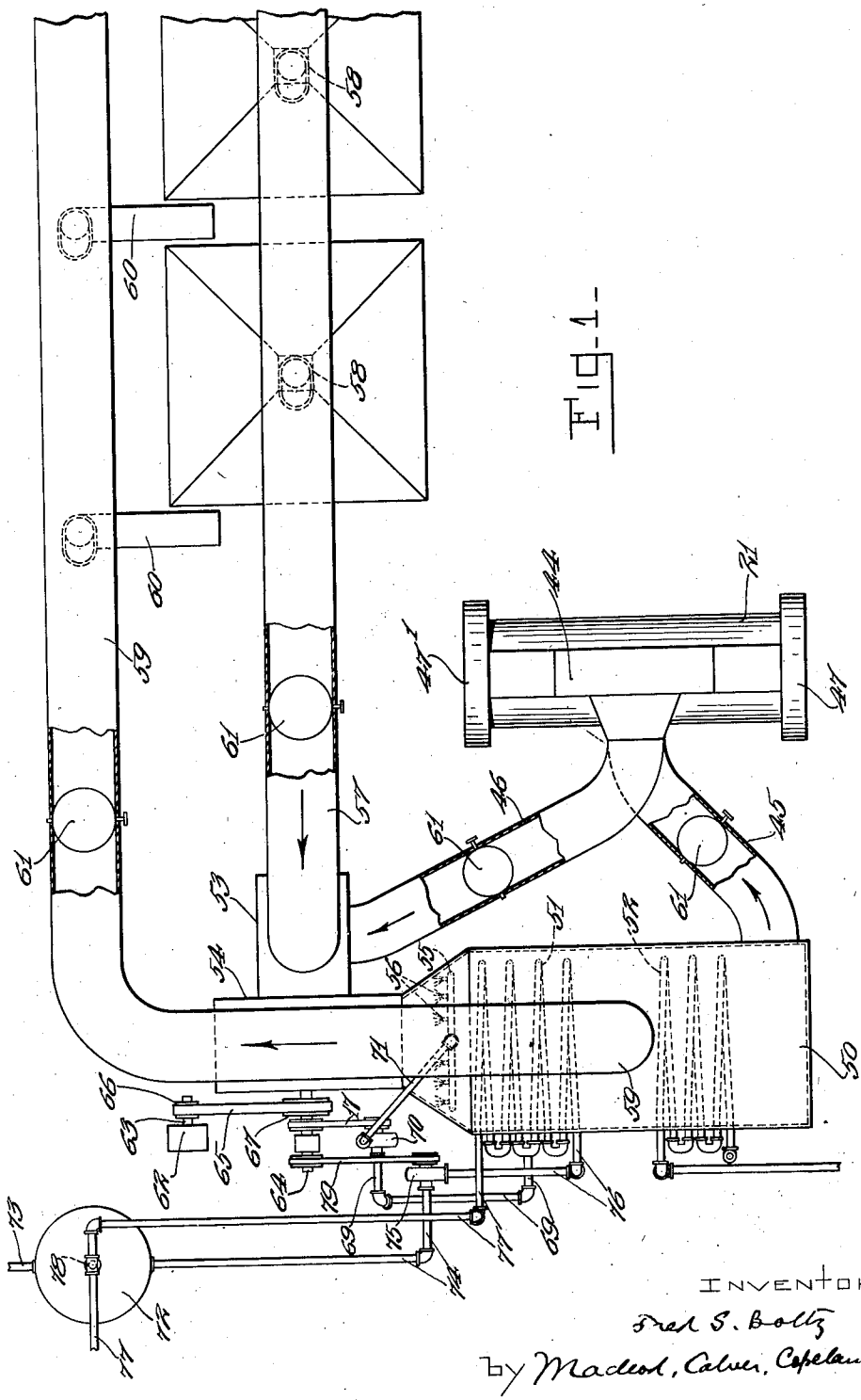

Fig. 1.

INVENTOR:
Fred S. Boltz
by Macleod, Calver, Copeland & Dike
Attys.

Oct. 15, 1929. F. S. BOLTZ 1,731,290

DRYING, WASTE HEAT RECOVERY, AND COOLING SYSTEM

Filed Dec. 19, 1927 4 Sheets-Sheet 2

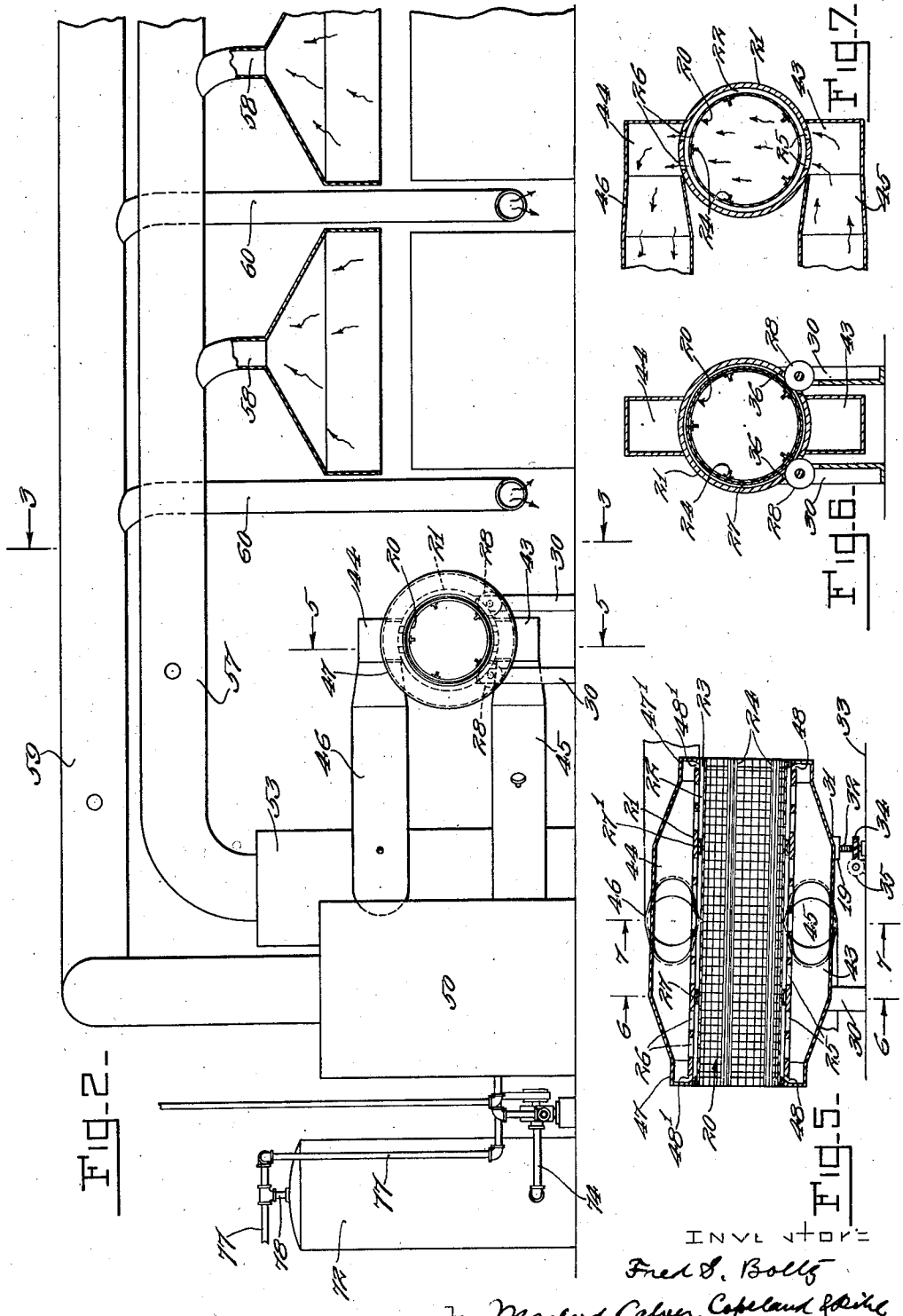

FIG-2-

FIG-7-

FIG-6-

FIG-5-

INVENTOR:
Fred S. Boltz
by Macleod, Calver, Copeland & Dike
Attys

Oct. 15, 1929. F. S. BOLTZ 1,731,290

DRYING, WASTE HEAT RECOVERY, AND COOLING SYSTEM

Filed Dec. 19, 1927 4 Sheets-Sheet 3

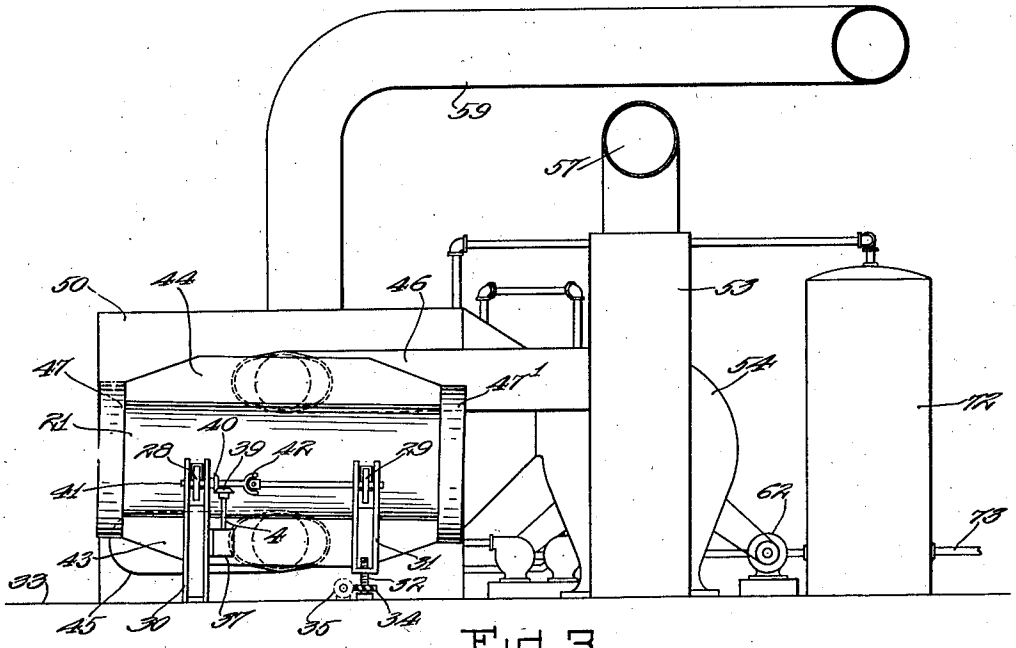

Fig-3-

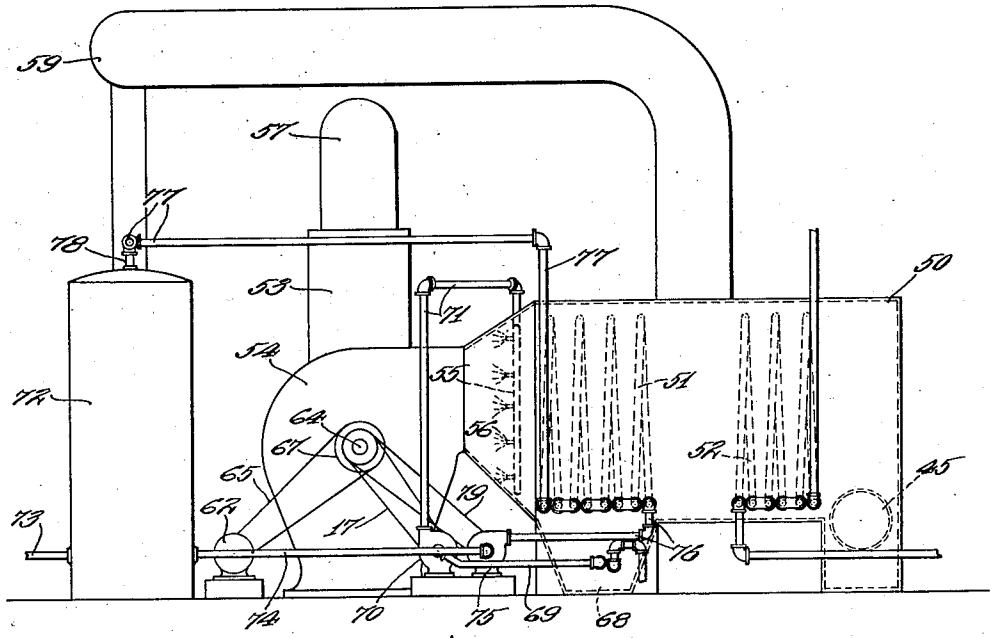

Fig-4-

INVENTOR:
Fred S. Boltz
by Macleod, Calver, Copeland & Dike
Attys

Oct. 15, 1929. F. S. BOLTZ 1,731,290

DRYING, WASTE HEAT RECOVERY, AND COOLING SYSTEM

Filed Dec. 19, 1927 4 Sheets-Sheet 4

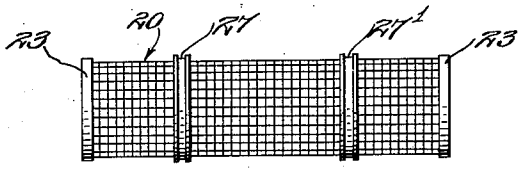

Fig. 8.

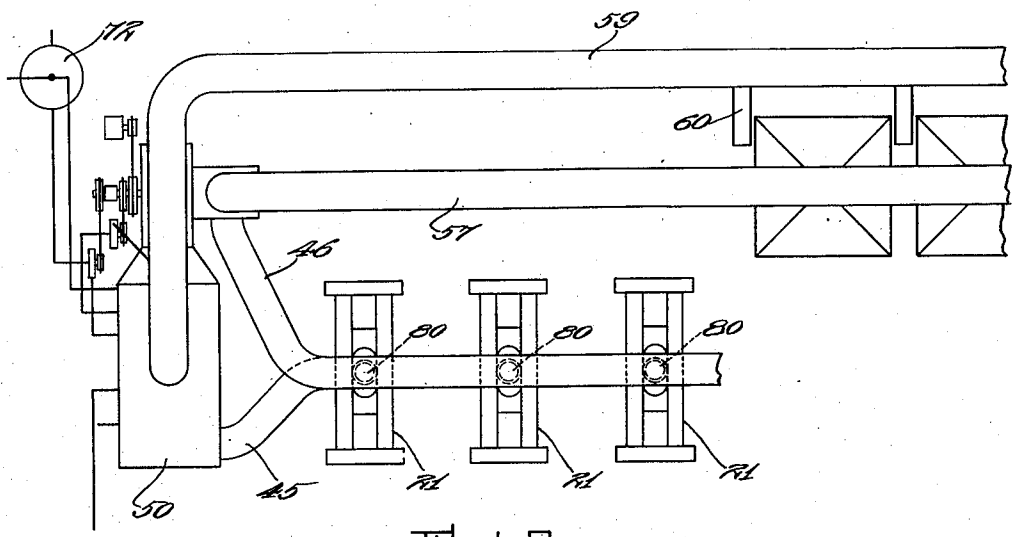

Fig. 9.

INVENTOR:
Fred S. Boltz
by Macleod, Calver, Copeland & Dick
Atty

Patented Oct. 15, 1929

1,731,290

UNITED STATES PATENT OFFICE

FRED S. BOLTZ, OF MANSFIELD, MASSACHUSETTS

DRYING, WASTE-HEAT RECOVERY, AND COOLING SYSTEM

Application filed December 19, 1927. Serial No. 241,006.

The invention relates to a new and useful improvement in a drying, waste heat recovery and cooling system. It is more especially intended for use in laundries and the like, but in many of its features it is applicable to other uses. It has special reference to drying and ventilating apparatus. One object of the invention is to dry the clothes or other articles with a minimum of labor and to save large quantities of heat in the humid air which are ordinarily allowed to escape out of doors and which by my invention may be utilized to aid in heating the process water used in the wash wheels.

The humid air in laundries carries with it lint coming from the clothes and the discharge of this lint laden air around buildings is objectionable. Some machines have lint catching devices consisting of moving screens. It is more or less difficult to keep these screens clean and in good operating condition. One object of the present invention is to provide spray mechanism for the lint laden air and cause the lint to be carried to a place where it can be conveniently disposed of. The water from the sprays catches the lint and deposits the lint on the cooling surface which is in the path of the lint laden air from where it flows by gravity to a tank adjacent the cold water coils.

The cooling coils thus utilized are the ones which carry the fresh water to the washing machine. The spray water absorbs the heat of the warm lint laden air and when the spray water thus warmed falls on the cooling coils it warms the coil and the water which is passing through the coil. The spray water thus heated by the warm humid air heats the coils by contact with them better than by contact of the hot humid air itself with the coils.

In laundries there are usually a large number of heated drying machines of different kinds and the heated machines coming in contact with the damp clothes that are being dried or finished will raise the temperature or humidity of the air surrounding the machinery. If this warm humid air is not removed from the working areas it will soon become saturated with moisture and when the saturated air comes in contact with cool surfaces the moisture in the air will collect and drop on the finished goods and do other damage. The usual method of removing this heated air is by drawing it out of the building by fans or blowers. The air thus removed is replaced by other air from the outside which is usually heated at an expenditure of steam either in radiators or finishing machines. One object of the invention is to remove this warm humid air and extract the heat from it for useful purposes either for heating the process water used in the washing or for any other useful purpose and to return it so that the cool air can again absorb heat and moisture escaping from the machinery.

Warm humid air is drawn through the water spray and over the cooling spray by a system of ducts and when the humid air is cooled it will deposit its moisture, that is, it will drip down when it comes in contact with the cold surfaces of the apparatus and will have capacity to absorb and carry more moisture when heated again. When the humid air is cooled the moisture content is lowered by reason of dripping and this leaves the clothes still saturated just short of the dripping point. The cool saturated air when distributed around the hot finishing machinery will rise in temperature and the power for carrying moisture is increased. This air is then able to absorb and carry away moisture that is driven out of the clothes in the drying or finishing process.

Drying in presses and flat work presses is usually done by bringing the clothes in contact with hot plates.

In some forms of finishing it is more desirable to let warm dry air pass through the clothes that are being dried, the warm dry air picking up the moisture. In apparatus embodying my invention, after the air is dehumidified by the sprays and cooling coils it is then reheated by heating coils such as steam, air or hot water or any other suitable heating medium.

The power of this reheated air to absorb moisture is increased and this reheated air when passed through a drying tumbler will collect the moisture from the clothes that are being dried in the tumbler.

In connection with the apparatus there is provided a storage tank for the water to be used in the washing. This tank may be supplied as desired from the city main or other suitable source. The water is pumped from the lower part of this tank through the cooling coils and the water after passing through the cooling coils is pumped back into the upper part of the storage tank.

Briefly, in the use of the apparatus, first, the warm humid air is cooled and the extracted heat is utilized to heat the coils which carry the fresh water. Second, the moisture is extracted from the air by cooling and the dry cool air is returned to the work rooms where it can absorb more moisture from the humid air. Third, a part of the cooled dry air is distributed to furnish ventilation instead of taking fresh air from outside which has to be heated at expense by steam or otherwise. Fourth, the lint laden air is washed by the spray nozzles so that the lint is deposited leaving the air clean. Fifth, the air thus cleaned is heated and returned to again pass through the drying apparatus.

The invention will be fully understood from the following description when taken in connection with the accompanying drawings and the novel features thereof will be pointed out and clearly defined in the claims at the close of this specification.

Fig. 1 is a plan view of apparatus embodying my invention.

Fig. 2 is a front elevation of the parts shown in Fig. 1.

Fig. 3 is a section on the line 3—3, Fig. 2.

Fig. 4 is an end elevation as viewed from the left of Fig. 2.

Fig. 5 is a vertical longitudinal section of the drying tumbler taken on line 5—5, Fig. 2.

Fig. 6 is a section taken on line 6—6, Fig. 5.

Fig. 7 is a section taken on line 7—7, Fig. 5.

Fig. 8 is a detail view of the tumbler cylinder through which the goods pass in drying.

Fig. 9 is a diagram showing a series of drying tumblers combined and incorporated in apparatus embodying the invention.

Referring now to the drawings, there is shown at 20 a rotary reticulated tumbling cylinder, preferably formed of heavy wire cloth and enclosed within a stationary cylindrical casing 21 of slightly larger diameter than the tumbling cylinder 20, as shown by the annular space 22, the tumbler being co-axial with the casing, so that the tumbler can freely rotate.

The cylinder 20 is provided with iron bands 23 at its ends and with longitudinal T-iron ribs 24 which connect the two end bands and form a frame-work for the wire cylinder.

The casing 21 is formed with warm air inlet apertures 25 preferably in its bottom for admission of warm air and is formed with warm air outlet apertures 26 preferably in its top (see Figs. 5 and 7).

The tumbler cylinder is also provided with grooved peripheral bands 27, 27′ intermediate its ends, the grooves in said bands forming raceways which are respectively engaged by two pairs of rollers 28, 29 mounted on standards 30, 31 which support the tumbler. There are two standards 30, 30 near one end in which are journalled the two rollers 28, 28 which engage the groove in the band 27 and two standards 31, 31 near the opposite end in which are journalled the two rollers 29, 29 which engage the other peripheral raceway 27′. The two sets of rollers serve to support the tumbler. The rollers 28, 28 are positively rotated and serve not only as a support but also as a friction drive for the tumbler.

Preferably the tumbler is mounted on an inclined axis, that is, the inlet end of the tumbler is higher than the exit end so that there is a downward pitch from the entrance end to the exit end. Preferably the support for one end is adjustable vertically so that the angle of the pitch may be varied according to the rate of speed that it is desired to have the clothes travel from the inlet to the exit end. Preferably the adjustable support is at the exit end. For this purpose the standards 31 are vertically extensible or adjustable as shown in Figs. 3 and 5. To provide means for making the adjustment, the lower end of each standard 31 has a threaded aperture therein which is engaged by a screw 32 whose lower end is swivelly connected to a fixture secured to the floor 33 or other support. The two screws serve as legs. By turning the screws 32, the elevation of the outlet end of the tumbler may be raised or lowered to regulate the angle of inclination of the axis of the tumbler as desired. In order to to provide means for conveniently turning the screw, the shank of each screw is provided with a worm gear 34 which is engaged by a worm 35. The worms 35 are mounted on a shaft 18, and by turning the screws said shaft may be rotated in either direction to raise or lower the standards 31.

The cylindrical casing 21 is formed with slots 36 (see Fig. 6) through which the rollers 28, 29 extend to engage the raceways 27, 27′. The friction rollers 28 may be driven by any suitable means. The means shown in the drawings consists of a motor 37 which rotates a shaft 4 on which is mounted a gear 39 having driving connection with a gear 40 mounted on the shaft 41 on which the roller 28 is mounted. Any other suitable driving mechanism may be employed.

In order to permit the variation in the elevation of the rollers 29 with relation to the rollers 28 while still keeping the gears in engagement, the shaft 41 is made in two sections connected by a universal joint 42.

The rotary tumbler is open at both ends.

The clothes are fed into the tumbler at the higher end and travel through and pass out of the tumbler at its lower end.

Means are provided for causing a circulation of warm dry air through the tumbler cylinder while the clothes are being fed through the tumbler. The apparatus shown for this purpose is as follows:

Extending lengthwise beneath the casing 21 is an air chamber 43 with open top and closed sides. The side walls of this chamber fit closely against the lower part of the casing 21. The apertures 25 in the casing 21 communicate with the air chamber 43 and the warm dry air is admitted to the casing 21 through these apertures and thence passes to the interior of the reticulated tumbler cylinder 20. An outlet chamber 44 extends lengthwise of the drier just above the casing 21, said chamber 44 fitting closely to the top of the casing 21 and being open on its lower side. The outlet apertures 26 at the top of the casing 21 open into said chamber 44. Warm air is admitted to the lower chamber 43 through a conduit 45 and the outlet chamber 44 communicates with an outlet conduit 46 for the purpose to be hereinafter described.

Annular air chambers or boxes 47 and 47′ are respectively mounted on opposite ends of the cylindrical casing 21. These annular air chambers are open to the bottom air chamber 43 and also communicate with the interior of the casing 21 through ducts 48 and 48′ respectively. These ducts are inclined toward the middle part of the tumbler cylinder 20.

As the warm air flows from the inlet chamber 43 through the apertures 25 into the annular space 22 between the casing 21 and the tumbler 20 and thence into and through the tumbler a portion of the warm air will flow from the chamber 43 into the annular chambers 47, 47′ and thence through the apertures 48 in the casing to the annular space between the casing and the cylinder, thence through the apertures in the reticulated tumbler cylinder, thence upward across the interior of the tumbler cylinder near its ends, thence out through the apertures in the tumbler cylinder and through the apertures 26 in the upper part of the casing 21 thence to the outlet chamber 44 and conduit 46. This produces what I term an air curtain flowing across the ends of the tumbler and prevents the warm air which flows upward through the goods in the tumbler from escaping at the ends of the tumbler and causes said air to flow through the outlet conduit 46. At the same time this curtain of air does not interfere with the free passage of the dried clothes through the exit end of the tumbler.

Mounted within a chamber 50 is a cold water coil 51, through which fresh water flows, and there is also a reheating coil 52. The reheating coil may be heated by either steam, hot water, or air, or by any other suitable heating medium. The inlet warm air conduit 45 leads from the lower part of the chamber 50 and the outlet conduit 46 leads into a chamber 53 which connects with a blower 54, whence the air is forced into one end of the casing 50 opposite the end from which the warm air conduit 45 leads. Within the said casing 50 near the inlet end is mounted a water pipe 55, having a series of spray nozzles 56. An air conduit 57 is mounted in the upper part of the room, preferably near the ceiling, and opens into the said chamber 53, as does also the conduit 46. The conduit 57 has a series of inlet ducts 58 through which the warm, humid air in the work room, which comes from the finishing machines, flat work ironers, presses and other apparatus, is drawn into the chamber 53 where it mingles with the air coming through the conduit 46 from the tumbler cylinder, and thence it is forced by the blower into the chamber 50. The air coming from these two sources is forced by the blower past the spray nozzles 56, thence into contact with the cold water coils, thence part of the air is sent over the heating coils 52, thence through the conduit 45, and back into the drying tumbler air chamber 43 to be used over again in the tumbler. The other part of the cooled air will pass out through pipe 59 and distributed around the finishing machines and for ventilation as hereinafter described.

The water for the cold water coils 51 may be taken from any suitable supply and the heating coils may be heated in any suitable way.

The air which comes from the tumbler cylinder through the conduit 46 is usually laden with lint coming from the clothes, and there are also more or less impurities in the air that are taken in through the conduit 57. When the air from these two combined sources is forced into the chamber 50 and past the spray nozzles 56, the lint and other foreign matter will be saturated by the spray and will fall by gravity into a tank 68 (see Fig. 4), whence it can be removed as desired. The air is thus thoroughly cleansed by the spray nozzle and then passes between and around the cold water coils 51. As it passes over the said coils 51 the air is cooled and dried, and thence passes over the heating coils 52 by which it is heated to the desired temperature and from there passes through the conduit 45 back into the tumbler cylinder.

The large air pipe 59 previously referred to leads out of the chamber 50 at a point intermediate the cooling coil and the heating coil and opens into the lower part of the room. A series of ducts 60 project from the said pipe 59 and open into the room. A part of the air which has been cleaned by the spray nozzles and cooled by the cooling coil will be blown through the pipe 59 and thence through the ducts 60 into the interior of the room and

around the finishing machines to absorb the excess heat and humidity and also supply clean cool air for the apertures to replace the humid and foul air removed through the ducts 58 and conduit 57 from the upper part of the room. Dampers 61 are provided in the several air pipes 45, 46, 57 and 59 to control the passage of air through said pipes.

The fan of the blower may be driven by any suitable means. As shown in the drawings an electric motor 62 is provided. The motor shaft 63 of the motor has driving connection with the fan shaft 64 through a belt 65 which runs over a pulley 66 on the motor shaft and over a pulley 67 on the fan shaft.

Water for the spray nozzles is supplied from the tank 68 (see Fig. 4) through pipes 69, pump 70 and pipes 71. The pump 70 is driven by a belt 17 which passes over a pulley on the fan shaft 64 and over a pulley on the pump shaft.

Means for supplying the cold water through the cold water coils is as follows:

At 72 is shown a cold water storage tank supplied through a pipe 73 from any suitable source, such for instance as the city water system. Water from this tank passes through pipe 74, pump 75 and and pipes 76 to the coil 51. After the water passes through the coil 51 in which the temperature of the water is raised by the warm humid air passing through and around the coil from the drying tumbler, the water passes out through the pipes 77 to a heater, not shown, where it will be raised to a higher temperature for use in the washing machines or any other purpose desired. If the water is not being drawn for use it will pass through pipe 77 and through by-pass 78 into the upper part of storage tank 72.

The pump 75 is driven by a belt 79 which runs over a pulley on the fan shaft 64 and over a pulley on the pump shaft.

In Fig. 9 there is shown a gang of drying tumblers each supplied with warm dry air through pipes not shown leading from the main warm air supply pipe 45. The air leaving the tumbler passes through pipes 80 to the pipe 46.

The de-humidifying, de-linting and cooling features of the apparatus are not limited to use with drying tumblers of the particular type shown in the drawings and already described. So far as these features of the apparatus are concerned, they are applicable to use in connection with drying tumblers of other form of construction. For instance, it is not necessary that the tumblers should be reticulated or open at the ends. In fact, these features may be used in connection with drying tumblers of a well known construction and so far as the claims covering these features are concerned it is not intended to have them limited to use with drying tumblers such as are shown in the drawings.

What I claim is:

1. A rotary drying cylinder open at each end, a cylindrical casing surrounding said drying cylinder and within which the drying cylinder rotates, an annular air box around each end of the casing, means for conducting warm air into the said casing and into said annular boxes, passages for the flow of the air from said annular boxes into the said drying cylinder and transversely of said drying cylinder near its ends whereby a curtain of air will be formed across the ends of said cylinder and passages for the flow of the warm dry air from the said casing into the interior of said drying cylinder.

2. A drying cylinder open at each end, an annular air box surrounding the cylinder at each end, means for causing a flow of dry air into said air boxes and from the said air boxes transversely of the drying cylinder whereby an air curtain is formed across the ends of the cylinder and means for causing a flow of dry air into the interior of the drying cylinder.

3. A drying cylinder open at each end, an apertured casing surrounding said cylinder, an annular air box surrounding the cylinder casing at each end thereof, means for causing a flow of dry air into said annular casing, said casing having passages through its walls near the ends thereof inclined toward the middle of the casing, said inclined passages being adapted to cause the air from the annular boxes to flow toward the middle of the cylinder.

4. A drying cylinder open at each end, an apertured casing surrounding said cylinder, an annular air box surrounding the cylinder casing at each end thereof, means for causing a flow of dry air into said annular boxes and inclined passages through the lower part of the casing near the ends through which air from the annular boxes passes into the drying cylinder and inclined passages through the upper part of the casing through which the air passes out of the drying cylinder and casing, said inclined passages being inclined toward the middle of the cylinder.

In testimony whereof I affix my signature.

FRED S. BOLTZ.