# United States Patent [19]

**Gresley et al.**

[11] **3,923,279**

[45] **Dec. 2, 1975**


[54] **HANGER APPARATUS FOR SUPPORTING INTRAVENOUS CONTAINERS**


[76] Inventors: **James E. Gresley,** 5510 Standish Drive, Fort Wayne, Ind. 46806; **Hugh S. Glidewell,** 7130 S. Calhoun St., Fort Wayne, Ind. 46802



[22] Filed: **Sept. 25, 1974**

[21] Appl. No.: **509,243**

[52] **U.S. Cl.** ..... **248/318;** 211/119

[51] **Int. Cl.²** ..... **A61G 12/00;** A47B 73/00

[58] **Field of Search** ..... 248/318, 339, 317, 146, 248/153; 211/119; 222/181



[56] **References Cited**

UNITED STATES PATENTS

| | | | |
|---|---|---|---|
| 628,784 | 7/1899 | Fitzgerald | 211/119 UX |
| 1,367,638 | 2/1921 | Sweet | 248/318 X |
| 1,813,932 | 7/1931 | Kennard | 211/119 |
| 3,397,795 | 8/1968 | Elting | 211/119 X |
| 3,460,789 | 8/1969 | McKirdy et al. | 248/318 X |
| 3,709,372 | 1/1973 | Alexander | 248/318 X |



*Primary Examiner*—J. Franklin Foss



[57] **ABSTRACT**

A hanger apparatus for supporting a plurality of intravenous containers is provided in which the hanger is formed from a continuous piece of metallic bar. The hanger includes a partially closed eye on one end of the bar for supportably coupling the hanger to a support. A plurality of intravenous hooks is formed in the bar at different longitudinal distances from the partially closed eye, each hook being rotationally displaced about the partially closed eye from the adjacent one of the hooks, and each opening toward the partially closed eye. The portions of the metallic bar intermediate of the partially closed eye and the plurality of hooks form a stem for connecting the hooks to the partially closed eye and the hooks to each other.


**9 Claims, 5 Drawing Figures**

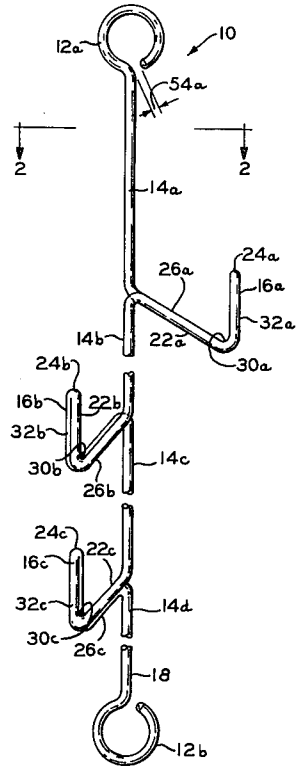

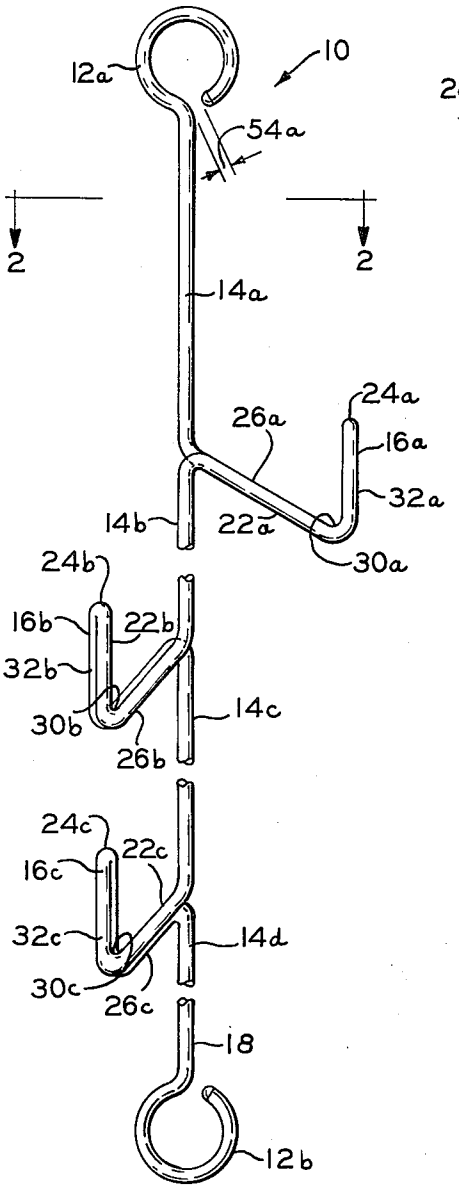


FIG. 1

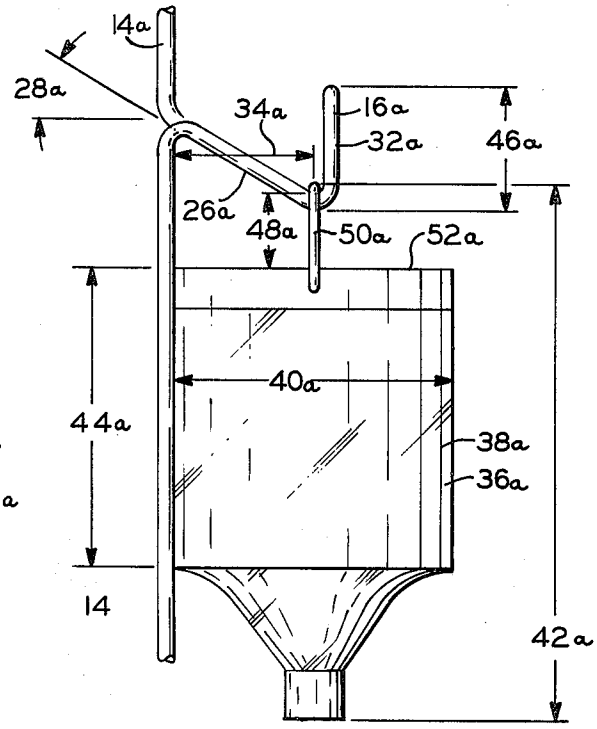


FIG. 3

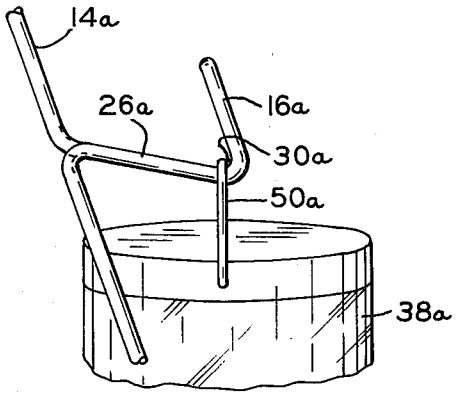


FIG. 4

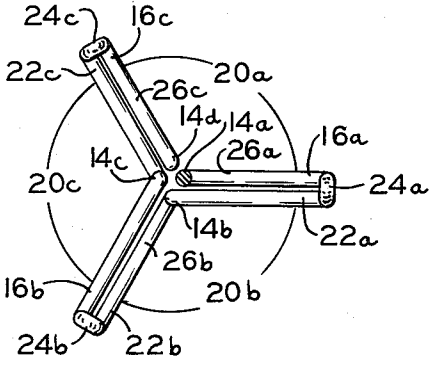


FIG. 2

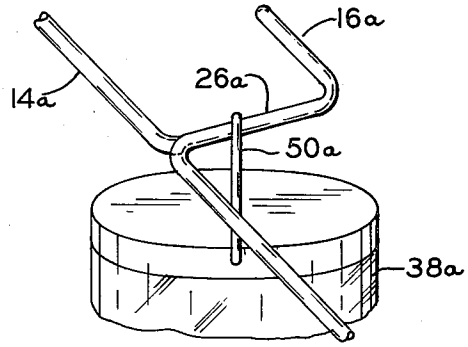


FIG. 5

# HANGER APPARATUS FOR SUPPORTING INTRAVENOUS CONTAINERS

## BACKGROUND OF THE INVENTION

1. Field of the Invention

This invention relates generally to a hanger apparatus for supportably receiving intravenous containers, and more particularly to a hanger formed from a continuous piece of metallic bar for supportably receiving a plurality of intravenous containers in longitudinally overlapping and radially displaced relationship.

2. Description of the Prior Art

In copending patent application Ser. No. 372,177, filed June 21, 1973, a hanger apparatus is disclosed for supportably receiving, in balanced groupings, two, three, four, or six intravenous containers from a single supporting stand or ceiling hook. The present invention provides a hanger, for supporting a plurality of intravenous containers, which provides additional advantages of compactness and simplicity of manufacture over that of the aforementioned invention.

## SUMMARY OF THE INVENTION

In accordance with the broader aspects of this invention, there is provided a hanger for intravenous containers which is formed from a continuous piece of metallic bar. At one end of the bar, a partially closed eye is formed for supportably coupling the hanger to a supporting hook in the ceiling or to a supporting hook on a stand. A plurality of intravenous hooks are formed in the bar at different longitudinal distances from the partially closed eye, each of the hooks being rotationally displaced about the partially closed eye from the adjacent one of the hooks, and each hook opening toward the partially closed eye. Portions of the metallic bar, intermediate of the hooks and intermediate of the partially closed eye and the proximal one of the hooks, provide a stem which serves to interconnect, longitudinally displace, and rotationally locate the hooks from each other and from the partially closed eye.

It is an object of this invention to provide a hanger for the plurality of intravenous containers in which the hangers and the containers supported thereon require a minimum of space.

It is still another object of this invention to provide a hanger for intravenous containers in which a plurality of containers supported thereon require a minimum of space.

It is still another object of this invention to provide a hanger for intravenous containers in which a plurality of containers is supported in longitudinally overlapping and rotationally displaced relationship.

It is still another object of this invention to provide a hanger for a plurality of intravenous containers in which the hanger is formed from a continuous piece of metallic bar.

The above-mentioned and other features and objects of this invention and the manner of attaining them will become more apparent and the invention itself will be best understood by reference to the following description of an embodiment of the invention taken in conjunction with the accompanying drawings.

## BRIEF DESCRIPTION OF THE DRAWINGS

FIG. 1 is a side view partially broken for clarity of illustration of the apparatus;



FIG. 2 is a top sectional view of the apparatus taken substantially as shown by section line 2—2 of FIG. 1;

FIG. 3 is a partial side view of the apparatus of FIG. 1, taken as shown in FIG. 1 and showing one intravenous container mounted on the apparatus;

FIG. 4 is a partial side view of FIG. 1, showing the orientation of the intravenous container of FIG. 3 when the hanger is rotationally displaced about its upper or supporting end; and

FIG. 5 is a partial side view, similar to that of FIG. 4, but with the hanger rotationally displaced to a greater angle than that of FIG. 4, and showing the orientation of the intravenous container upon the hook thereof.

## DESCRIPTION OF THE PREFERRED EMBODIMENT

Referring now to FIG. 1, the intravenous hanger apparatus, generally depicted at **10**, includes a partially closed eye **12***a* which comprises means for supportably coupling the hanger to a supporting means (not shown) and which is formed at one end of a piece of metallic bar, a stem **14** which includes portions **14***a* – **14***d*, hooks **16***a* – **16***c*, and a second partially closed eye **12***b* which provides means for supportably receiving another hanger **10***a* (not shown) and which is proximal to a bottom end **18** of the hanger **10**.

Referring now to FIGS. **1** and **2**, the hooks **16***a* - and **16***c* extend radially from the stem **14** and are rotationally displaced from each other by the angles **20***a*, **20***b*, and **20***c* which are each equal to 120°. Each of the hooks **16** is made of parallel disposed and conforming portions **22** of the metallic bar which are interconnected by a reflex curve portion at the respective distal ends **24**. The inner ends of the conforming portions **22** separate, one bending upward to form one portion of the stem **14** and the other bending downward to form another portion of the stem **14**. Thus it can be seen that the partially closed eye **12***a*, the stem **14**, the hooks **16** and the second partially closed eye **12***b* are formed from one continuous piece of metallic bar.

Referring again to FIGS. **1** and **2**, the individual portions **14***a* – **14***d* of the stem **14** are preferably straight and substantially align with each other to form a substantially straight stem **14** as shown in FIG. **1**; but it is evident that the individual portions **14***a* – **14***d* could be of any shape and that it is not necessary for the individual portions **14***a* – **14***d* to align with each other. In the FIG. **2** configuration, the portions **14***a* – **14***d* have been spaced apart and the partially closed eye **12***b* has been omitted, to more clearly show the continuous construction of the hanger, so FIG. **2** is not a true top view of FIG. **1**.

Referring now to FIGS. **1** and **3**, each of the hooks **16** includes a radial arm portion **26** which extends radially outward from the stem **14** and which slopes downward from the partially closed eye **12***a* by an angle **28** (FIG. **3**) which is preferably (30°). The three hooks **16** also each include a saddle portion or curved portion **30** which respectively comprises continuations of each of the radial arm portions **26**. The hooks **16** each additionally include a bail retaining portion **32** which comprises a continuation of the respective saddle portions **30** and which extends upward from the respective saddle portions **30**, preferably in parallel relationship to the stem **14**.

The centers of each of the saddle portions **30** of the respective hooks **16** are preferably located at a radial distance **34** from the respective portions of the stem **14**

such that the maximum diameter portions **36** (FIG. 3) of the intravenous containers **38** touch or bear against the respective portions of the stem **14.** That is, the radial distance **34** is substantially equal to, or slightly less than one-half of the diameter **40** of the containers **38.**

Referring again to FIGS. **1** and **3,** the hooks **16** are longitudinally disposed along the stem **14** at a distance somewhat less than the total height **42** of the intravenous containers **30** so that compactness is achieved; but the hooks **16** are longitudinally disposed along the stem **14** at a sufficient distance such that each of the maximum diameter portions **36** of the intravenous containers **38** is supportably received by one of the portions of the stem **14.** That is, the hooks **16** are longitudinally displaced by a distance greater than the heights **44** of the respective maximum diameter portions **36** so that the maximum diameter portions **36** are disposed in nonoverlapping longitudinal relationship to each other.

Referring now to FIG. **3,** each of the bail retaining portions **32** preferably has a height dimension **46** which somewhat exceeds the respective bail openings **48** of the bails **50,** as measured orthogonally from a bottom surface **52** of the intravenous containers **38** to the inside of the bails **50;** so that each of the bails **50** are effectively retained within the respective hooks **16.**

Referring now to FIG. **4,** the stem **14** is shown vertically rotated approximately twenty (20°) about the partially closed eye **12***a*. Thus the radial arm portion **26***a* still slopes downward toward the saddle portion **30***a* by (10°); and the bail **50***a* is effectively retained in the saddle portion **30***a*.

Referring now to FIG. **5,** the stem **14** is shown vertically rotated about the partially closed eye **12** approximately (45°). Even though it is highly unlikely that the stem **14** would be accidentally rotated to such a great angle, even in this extreme case, the bail **50***a* is effectively retained within the hook **16***a* as can be clearly seen by the illustration.

Referring again to FIGS. **1** and **2,** the hanger **10** is formed from a bar having a circular corss-section as can be seen in FIG. **2.** The partially closed eye **12***a* includes an opening **54***a* which is somewhat less in minimum dimension than the diameter of the bar. Thus, when attaching the partially closed eye **12***a* to a similar or identical eye (not shown) of a supporting means (not shown), the opening **54***a* and the opening (not shown) of the supporting eye (not shown) can be cooperatively positioned in the well-known manner, to interconnect the partially closed eye. Or, optionally, the partially closed eye **12***a* can be resiliently deformed to increase the opening **54***a* and thereby to interconnect the partially closed eyes.

While there have been described above the principles of this invention in connection with specific apparatus, is is to be clearly understood that this description is made only by way of example and not as a limitation to the scope of the invention.

What is claimed is:

**1.** A hanger for intravenous containers which comprises a continuous piece of metallic bar being formed to include:

a. means on one end of said bar for supportably coupling said hanger to a support;

b. a plurality of hooks each being formed in said bar at different longitudinal locations in said bar; and

c. a stem comprising a plurality of parts of said bar, interconnecting said supporting means and one of said hooks, interconnecting and spacing each of said hooks at different longitudinal distances from said supporting means, orienting each of said hooks to open toward said supporting means, and rotationally displacing each of said hooks about said stem from the adjacent one of said hooks,

d. said hanger having a bottom end,

e. said one hook includes a radial arm portion that extends radially outwardly from said stem and downwardly toward said bottom end, a hook-shaped portion comprising a curved portion of said bar that extends outwardly and upwardly from the lowermost end of said bar portion, and a bail-retaining portion that comprises a portion of said bar that extends upwardly toward said coupling means a distance greater than the maximum size of the opening defined between the bottom of an intravenous container and a bail thereon.

**2.** The hanger of claim **1** in which said hanger is intended for intravenous containers of a given diameter, and each of said hooks includes a saddle portion being located radially from the adjacent portion of said stem by a distance substantially equal to one-half of said given diameter.

**3.** The hanger of claim **1** in which said stem is substantially straight, and said bail retaining portion is disposed substantially parallel to said stem.

**4.** The hanger of claim **1** in which said metallic bar is round in cross-section, and said coupling means comprises a partially closed eye having an opening into said eye that is less than the diameter of said bar.

**5.** The hanger of claim **1** in which said hanger includes means on said bottom end for supportably receiving a second hanger.

**6.** The hanger of claim **1** in which said hanger includes three of said hooks rotationally displaced from each other by approximately 120°, said hanger is intended for intravenous containers of a given diameter, said hanger is intended for intravenous containers having a bail with a given opening orthogonal to the bottom surface of said container, and said bar is round in cross-section; said stem is substantially straight and includes a bottom end; said one hook is formed to include parallel and conforming portions of said bar that are connected at the distal ends of said one hook and said one hook includes a radial arm portion comprising a substantially straight portion of said bar that extends radially outward from said stem and that slopes downward by approximately 30° toward said bottom end, a saddle portion comprising a curved portion of said bar that extends radially outward and upward from said radial arm portion and that is centered at a radial distance from said stem substantially equal to one-half of said given diameter, and a bail retaining portion comprising a substantially straight portion of said bar that extends upward from said saddle portion toward said coupling means and substantially parallel to said stem for a distance greater than said given opening; said coupling means comprises a partially closed eye having an opening into said eye that is less than the diameter of said bar; and said hanger includes means on said bottom end for supportably receiving a second hanger.

**7.** The hanger of claim **1** including at least one intravenous container of given length and having a larger diameter portion that is shorter in length than said given length,

two of said hooks like said one hook being spaced apart a length such that when two such containers are hung on two longitudinally adjacent hooks the

larger diameter portions thereof do not overlap but are spaced more closely than the given length of one container.

8. The hanger of claim 1 in which said hanger includes at least two of said hooks like said one hook rotationally displaced from each other, said hanger is intended for intravenous containers of a given diameter, said hanger is intended for intravenous containers having a bail with a given opening orthogonal to the bottom surface of said container, and said bar is round in cross-section; said stem is substantially straight and includes a bottom end; said one hook is formed to include parallel and conforming portions of said bar that are connected at the distal ends of said one hook and said one hook includes a radial arm portion comprising a substantially straight portion of said bar that extends radially outward from said stem and that slopes downward toward said bottom end, a saddle portion comprising a curved portion of said bar that extends radially outward and upward from said radial arm portion and that is centered at a radial distance from said stem substantially equal to one-half of said given diameter, and a bail retaining portion comprising a substantially straight portion of said bar that extends upward from said saddle portion toward said coupling means and substantially parallel to said stem for a distance greater than said given opening.

9. The hanger of claim 1 in which said hanger includes three of said hooks rotationally displaced from each other by approximately 120°, said hanger is intended for intravenous containers of a given diameter, said hanger is intended for intravenous containers having a bail with a given opening orthogonal to the bottom surface of said container, and said bar is round in cross-section; said stem is substantially straight and includes a bottom end; said one hook is formed to include parallel and conforming portions of said bar that are connected at the distal ends of said one hook and said one hook includes a radial arm portion comprising a substantially straight portion of said bar that extends radially outward from said stem and that slopes downward by approximately 30° toward said bottom end, a saddle portion comprising a curved portion of said bar that extends radially outward and upward from said radial arm portion and that is centered at a radial distance from said stem substantially equal to one-half of said given diameter, and a bail retaining portion comprising a substantially straight portion of said bar that extends upward from said saddle portion toward said coupling means and substantially parallel to said stem for a distance greater than said given opening.

* * * * *