Feb. 17, 1948. R. C. PIERCE 2,436,326

WINDING APPARATUS

Filed April 1, 1944

Fig. 1.

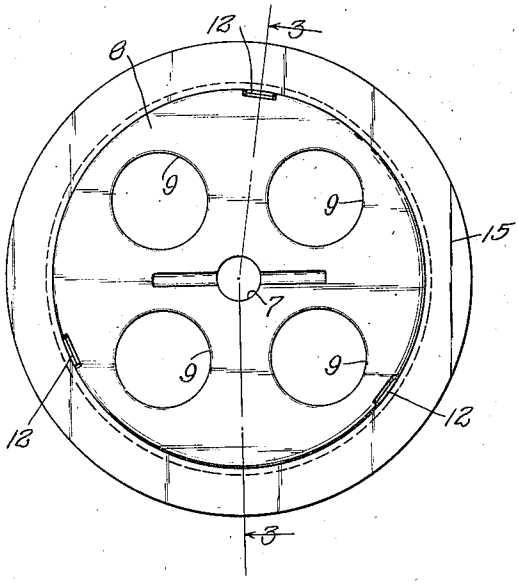

Fig. 2.

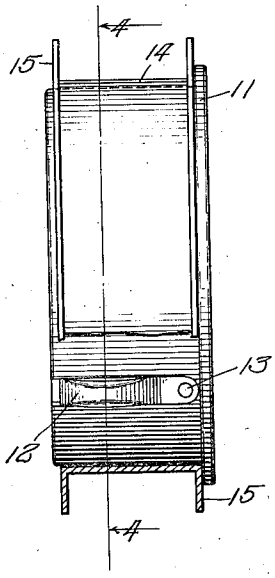

Fig. 3.

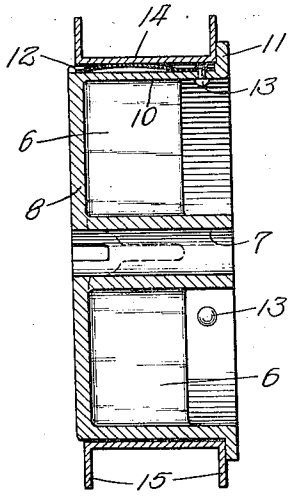

Fig. 4.

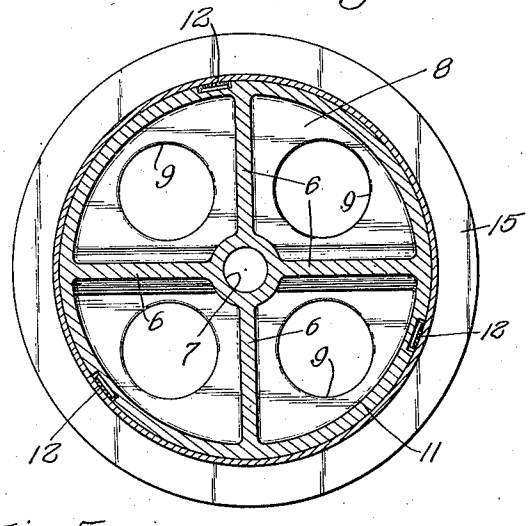

Fig. 5.

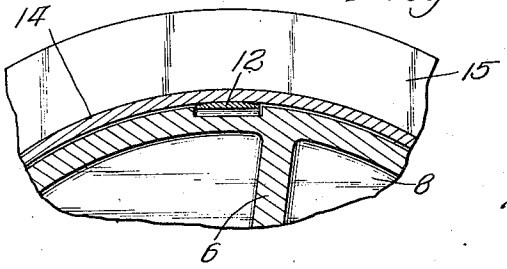

Inventor:
Robert C. Pierce,
By Christy, Wiles, Davies,
Schroeder & Merriam, Attys.

Patented Feb. 17, 1948 2,436,326

UNITED STATES PATENT OFFICE

2,436,326

WINDING APPARATUS

Robert C. Pierce, Niles, Mich., assignor to National-Standard Company, a corporation of Michigan

Application April 1, 1944, Serial No. 529,069

1 Claim. (Cl. 242—68)

1

This invention relates to apparatus for recording sound on a wire as the wire travels from one winding spool to another, and more particularly to improved apparatus for holding removable coils of wire on the machine.

In sound recording apparatus great lengths of wire are carried by the spindles of the machine, and it is usually desirable to remove those coils from the recording machine and transport them to another machine, which may be a transmitter. One recorder may utilize a large number of coils. In order to have the sound recorded faithfully, it is very important that the spools on the spindles be made with a very high degree of accuracy, and heretofore the practice has been to make the spool of light material such as Bakelite, and remove it in its entirety when it is necessary to change the wire. Such spools are quite brittle, and the flanges may be broken off by the pressure of the wire wound on the spool.

The primary object of the present invention is to provide an improved winding unit wherein the spindle is provided with a permanent mandrel on which is accurately and removably mounted a reversible metal spool having an untapered bore, which is frictionally gripped by the mandrel to turn with a minimum amount of eccentricity.

The invention is illustrated in a preferred embodiment in the accompanying drawing in which—

Figure 1 is a front elevational view showing the metal spool mounted on the mandrel; Fig. 2, a fragmentary end elevational view of the spool and mandrel; Fig. 3, a sectional view taken as indicated at line 3—3 of Fig. 1; Fig. 4, a sectional view taken as indicated at line 4—4 of Fig. 2; Fig. 5, an enlarged fragmentary sectional view similar to Fig. 4.

In the embodiment illustrated, a hollow mandrel 6 is made of insulating material such as Bakelite, and is provided with a bore 7 which makes a driving connection with the spindle of the apparatus. As shown in Fig. 4, the mandrel has an outer end disk 8, provided with finger holes 9, and an untapered body portion 10, provided at its inner end with an abutment flange 11.

In the embodiment illustrated, the body of the mandrel has cut-away portions in its periphery to receive hard steel leaf springs 12, which are held in place by rivets 13. The outer portion of the friction members is mounted to make smooth contact with the untapered bore of metal spool 14. The friction members are uniformly spaced concentrically on the periphery of the mandrel, so that the spool will not be eccentrically held.

The spool 14 is preferably made of aluminum or an aluminum alloy for lightness, and is provided with a pair of outwardly extending end flanges 15, to confine the convolutions of the coil of wire.

2

The bore of the metal spool and the periphery of the body portion of the spool are machined and polished to .001 of an inch accuracy.

With this construction, it will be seen that the spool is reversible, i. e., either end flange may be placed adjacent to the abutment flange on the mandrel. By using a smooth bore in the spool and having it engaged by metal friction members, the spool will rotate with an eccentricity of less than .005 of an inch.

The foregoing detailed description is given for clearness of understanding only, and no unnecessary limitations should be understood therefrom, for some modifications will be obvious to those skilled in the art.

I claim:

In apparatus for recording sound on a wire, a cylindrical winding mandrel provided at its inner end with an abutment flange and having an untapered body portion provided on its exterior cylindrical surface with three longitudinally extending equally spaced flat grooves open at their outer ends and extending to said abutment flange at their other ends, each of said grooves being open throughout their entire length along their outer side, a bowed leaf spring friction member in each of said grooves, one end of each of said spring friction members being fixed to the mandrel adjacent the abutment flange and the other end being free to move longitudinally and free to move laterally in one direction in its groove, and a metal spool having a substantially smooth untapered bore fitting concentrically on said friction members, said spool having a pair of integral outwardly extending end flanges.

ROBERT C. PIERCE.

REFERENCES CITED

The following references are of record in the file of this patent:

UNITED STATES PATENTS

Number	Name	Date
1,454,660	Tuttle	May 8, 1923
1,479,253	Rivetta	Jan. 1, 1924
1,520,379	Wermine	Dec. 23, 1924
1,560,721	O'Reilly	Nov. 10, 1925
2,170,334	Lacks	Aug. 22, 1939
2,205,441	Starring et al.	June 25, 1940
2,224,001	Newton et al.	Dec. 3, 1940
2,238,460	Bruestle	Apr. 15, 1941
2,249,150	Magrath	July 15, 1941

FOREIGN PATENTS

Number	Country	Date
332,937	Great Britain	July 30, 1930