US00D878988S

(12) United States Design Patent

Ryou et al.

(10) Patent No.: US D878,988 S

(45) Date of Patent: ** Mar. 24, 2020

(54) **DISPLAY PANEL FOR AUTOMOBILE CENTER FASCIA**

(71) Applicant: **LG DISPLAY CO., LTD.**, Seoul (KR)

(72) Inventors: **Soomin Ryou**, Seoul (KR); **Dong Jin Seo**, Seoul (KR)

(73) Assignee: **LG DISPLAY CO., LTD.**, Seoul (KR)

(**) Term: **15 Years**

(21) Appl. No.: **29/655,635**

(22) Filed: **Jul. 5, 2018**

(30) **Foreign Application Priority Data**

Jan. 5, 2018 (KR) 30-2018-0000829

(51) **LOC (12) Cl.** **12-16**

(52) **U.S. Cl.**
USPC **D12/192**

(58) **Field of Classification Search**
USPC D12/192, 415, 114, 345; D15/17, 28; D10/46, 98, 102–103, 122–127; D23/324
CPC B60H 1/34; B60H 1/3407; B60H 1/3414; B60H 1/3421; B60H 1/3428; B60H 1/3435; B60H 1/3442; B60H 1/345; B60H 1/3457; B60H 2001/3464; B60H 2001/3471; B60H 2001/3478; B60H 2001/3485
See application file for complete search history.

(56) **References Cited**

U.S. PATENT DOCUMENTS

D732,448 S * 6/2015 Yagisawa D12/192
D741,767 S * 10/2015 Nakamura D12/192
D755,745 S * 5/2016 Williams D14/126
D780,080 S * 2/2017 Ding D12/192
D797,022 S * 9/2017 Kumagai D12/192
D818,468 S * 5/2018 Jung D14/374
D822,662 S * 7/2018 Kim D14/374
D832,754 S * 11/2018 Ryu D12/192
D848,919 S * 5/2019 Kang D12/192
D849,620 S * 5/2019 Roo-Clefas D12/192
D863,204 S * 10/2019 Ryou D12/415
2016/0193924 A1* 7/2016 Kim G06F 1/1601 296/70

* cited by examiner

Primary Examiner — Katrina A Betton

(74) *Attorney, Agent, or Firm* — Birch, Stewart, Kolasch & Birch, LLP

(57) **CLAIM**

The ornamental design for a display panel for automobile center fascia, as shown.

DESCRIPTION

FIG. **1** is a front, right, top perspective view of the display panel for automobile center fascia showing our new design;
FIG. **2** is a front view thereof;
FIG. **3** is a rear view thereof;
FIG. **4** is a left side view thereof;
FIG. **5** is a right side view thereof;
FIG. **6** is a top plan view thereof; and,
FIG. **7** is a bottom view thereof.

1 Claim, 2 Drawing Sheets

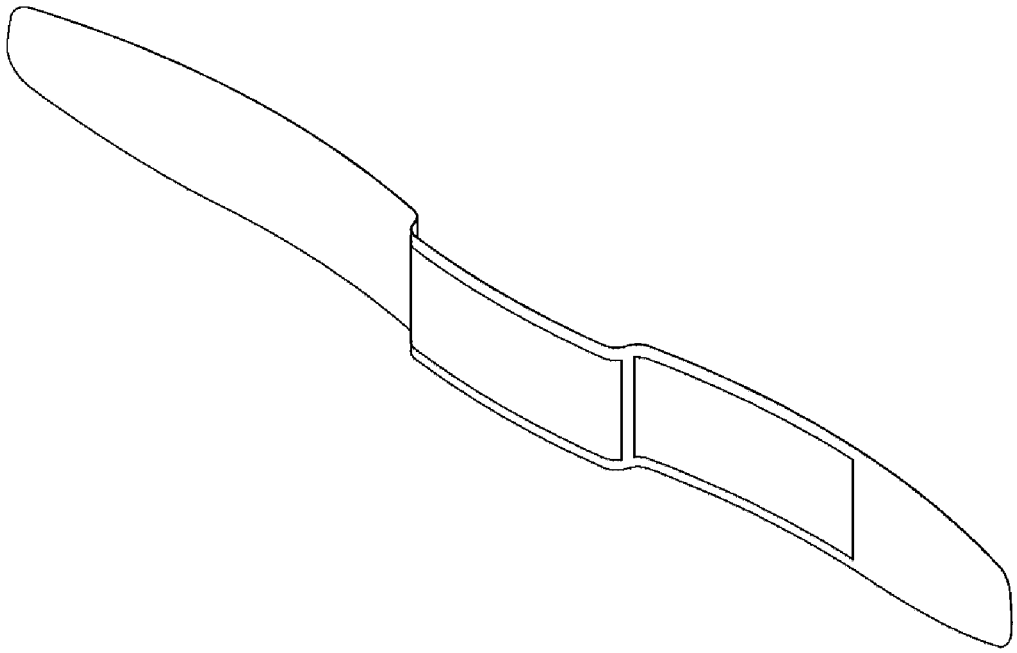

FIG. 1

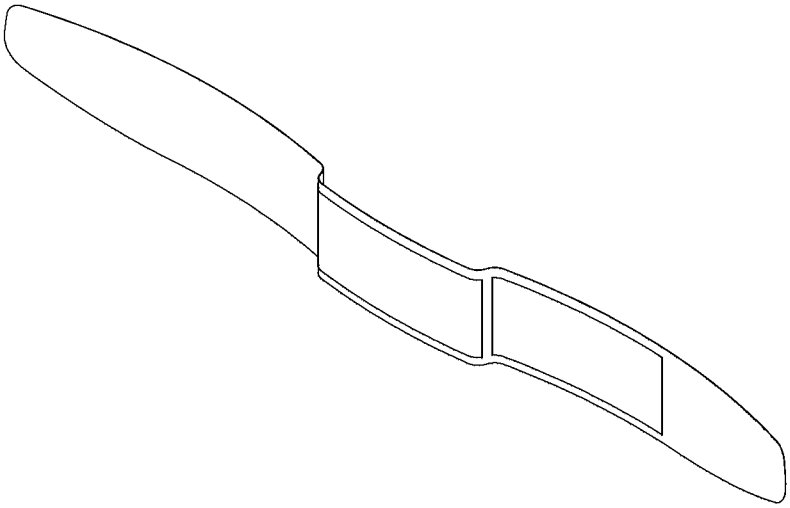

FIG.2

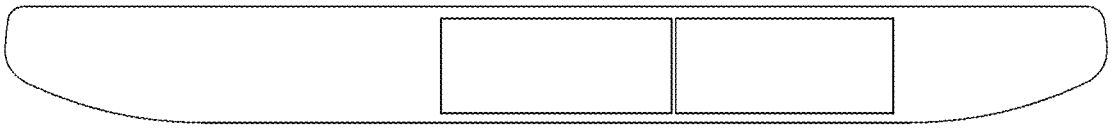

FIG. 3

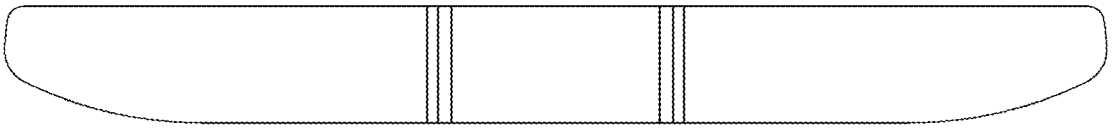

FIG. 4

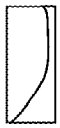

FIG. 5

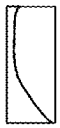

FIG. 6

FIG. 7