Dec. 19, 1939. E. F. ROBERTS 2,184,082

SHOE EMBODYING STRETCHABLE LEATHER IN ITS CONSTRUCTION

Filed July 9, 1937

Fig. 1.

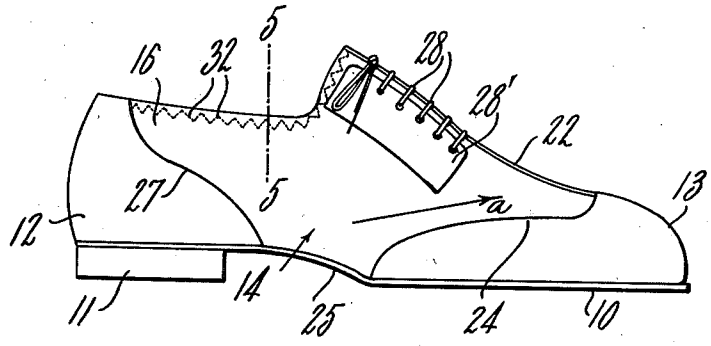

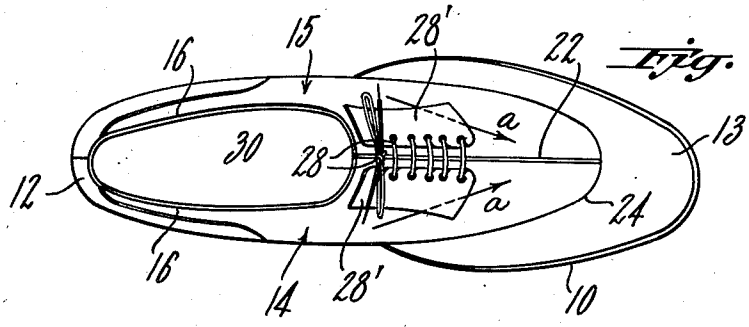

Fig. 2.

Fig. 3.

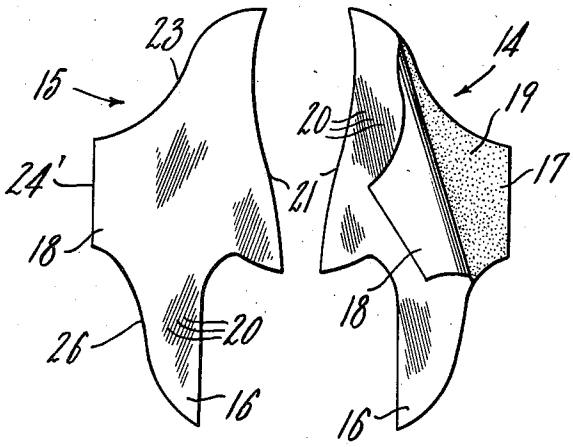

Fig. 4. Fig. 5.

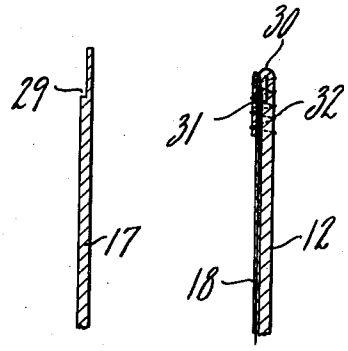

INVENTOR.
Edward F. Roberts
BY Gourley & Budlong
ATTORNEYS

Patented Dec. 19, 1939 2,184,082

UNITED STATES PATENT OFFICE

2,184,082

SHOE EMBODYING STRETCHABLE LEATHER IN ITS CONSTRUCTION

Edward F. Roberts, Rye, N. Y., assignor, by mesne assignments, to United States Rubber Company, New York, N. Y., a corporation of New Jersey

Application July 9, 1937, Serial No. 152,710

2 Claims. (Cl. 36—51)

This invention relates to a novel shoe construction whereby the formation of creases across the top of the shoe as it is worn may be prevented, and an exceptionally neat fitting and comfortable shoe is secured.

In the Alfred Vamos application, Serial No. 133,122, filed March 26th, 1937, there is disclosed a stretchable composite leather material well adapted for use in shoes and for other purposes, and which consists of a piece of stretchable leather having an elastic backing fabric secured thereto. The present invention contemplates the use of stretchable composite leather material of the general type disclosed by the Vamos application in shoes in a novel manner whereby creasing of the shoe across the top of the foot is prevented and other advantages are secured.

In carrying out the present invention various well known types of leather such as used heretofore in shoe uppers may be employed. The sheet or skin of such tanned leather is first treated in a manner which will be hereinafter described, or otherwise, to render it stretchable to a substantial degree. This stretchable leather while in an unstretched condition is then provided with a backing of elastic material such, for example, as woven elastic fabric that is adhesively secured to the stretchable leather to hold the leather normally in an unstretched condition.

The present invention relates more particularly to the use of this stretchable leather material in that portion of a shoe that overlies the top of the foot and which tends in the ordinary shoe to crease transversely of the foot as the shoe is worn.

An important feature of the present invention resides in a shoe having in the forward quarter area thereof at each side of the shoe a piece of stretchable leather material, each of these pieces of leather material being so positioned in the shoe that their direction of maximum stretch lies at a slight inclination to the longitudinal axis of the shoe. That is the directions of stretch of these two pieces of leather converge frontwardly towards each other.

This construction it is found materially improves the fit of the shoe about the fore part of the foot and permits that portion of the shoe overlying the top of the foot to contract and stretch approximately lengthwise of the shoe so as to prevent the formation of creases transversely of the shoe as it is worn.

The formation of such creases across the top of the shoe may be prevented to a large degree in accordance with this invention by employing such stretchable leather material only in the quarter area near the front of the shoe, but if the entire quarter area at the front and sides of the shoe is formed of such stretchable leather material in accordance with the present invention, further advantages will be secured, and a shoe that will not crease and which fits snugly but comfortably across the foot and around the foot receiving opening will be obtained.

The various features of the present invention will be more fully understood from the following description when read in connection with the accompanying drawing showing one good practical form of the invention.

In the drawing:

Fig. 1 is a side elevation of a shoe of the oxford type embodying the present invention;

Fig. 2 is a top plan view of the shoe of Fig. 1;

Fig. 3 is a plan view of two pieces of stretchable leather material cut to shape for use in the quarter area of the shoe of Fig. 1, the lining being partly rolled back.

Fig. 4 is a sectional view through a piece of stretchable leather; and

Fig. 5 is a sectional view taken on the line 5—5 of Fig. 1.

In the construction shown the shoe illustrated, which may be a man's, woman's or child's shoe, has a sole 10, heel 11, counter 12 and vamp or toe 13, all of which may have the usual or any preferred construction. In this shoe the entire quarter area at each side of the shoe is formed of the stretchable leather material in accordance with the present invention, and the manner of cutting the material for this use is illustrated in Fig. 3 wherein the material cut to form the quarter area for one side of the shoe is designated by 14 and that cut to form the quarter area for the other side of the shoe is designated by 15. It will be understood, however, that these portions 14 and 15 may be given various shapes other than herein illustrated, and that it is not necessary to extend the stretchable leather back along the sides of the foot as indicated by 16.

Each of the portions 14 and 15 of the shoe is formed of a piece of stretchable leather 17 which may be any of the types of leather used heretofore in shoe uppers except that it must have a pronounced stretch. This leather, after it has been tanned may be rendered stretchable to a substantial degree by treating the same as pointed out in the above mentioned Vamos application, or the skin or sheet of tanned leather may be treated as follows. The tanned leather

to be treated is first skived or roughened at its flesh side to open up the pores so that a liquid may better penetrate into the skin. A treating solution is made by dissolving bicarbonate of soda, common salt, alum and any vegetable soap in a sufficient quantity of water to make a thoroughly fluid mixture or solution. This solution is then applied to the inner skived face of the leather skin by means of a sponge or by spraying and is allowed to dry on the skin for about 2 hours in the atmosphere. At the end of this period the compound should have penetrated into the skin to make it soft and stretchable and should not show at either face of the dried skin but should be completely absorbed in the skin.

Due to the different types of skins used to produce leather for shoe uppers and to the many different methods employed in tanning leather it may be necessary to vary the above mentioned solution for treating tanned leather to render it stretchable. It is found, however, that a substantial stretch may be imparted to most leather of the type used for shoe uppers by treating the same with a solution consisting of one gallon of water having dissolved therein 2 ounces of bicarbonate of soda, 2 ounces of common salt, 2 ounces of soap (preferably an olive oil soap) and ½ ounce of alum. If the grain of the leather is unusually hard it may be desirable to use about 25% more of each of these ingredients to a gallon of water.

The effect of such treatment is to render the leather stretchable in all directions but in most instances the stretch imparted to the leather transversely of the skin, that is in a direction around the animal from which the skin was taken, will be greater than lengthwise of the skin.

The above compound when dissolved and united with the tanning salt in the leather forms a lubricating oil which not only renders the leather flexible, but also prevents it from drying out. This latter property is particularly important because leather in general and shoe leather in particular has a tendency to dry out and stiffen and crack. The salt of the above mentioned compound absorbed by the skin has the property of absorbing moisture from the air which helps to prevent the drying out of the leather.

After a skin or sheet of tanned leather has been treated in the manner just described and has been permitted to dry in an unstretched condition it will be found that the skin will then be capable of stretching anywhere from 20 to 50% or more, but that it will lack elasticity or contractive force. The skin is therefore provided with a backing of elastic material **18**, such, for example, as a thin sheet of woven elastic fabric which is secured to the flesh face of the leather by an elastic adhesive **19** such as latex. The unstretched leather sheet and sheet of elastic material when first united by the cement should be held pressed firmly together until the cement has had a chance to dry or set, after which the stretchable leather will be ready for use. The above described treatment of leather to make it stretchable will not alter the appearance of the leather so that the stretchable and non-stretchable leather portions of a shoe need not differ in appearance.

The elastic backing material **18** preferably consists of a thin sheet of woven elastic fabric provided with the elastic thread **20** extending either in the direction of the warp or of the weft, but not in both directions since a one-way stretch fabric is preferred. The elastic threads **20** may be formed in accordance with the disclosure of the Adamson Patent No. 1,822,847. The degree of stretch imparted to the elastic backed leather material may be accurately controlled by employing a backing fabric having a definite amount of stretch.

In order to secure the full advantages contemplated by the present invention it is important that the shoe material **14** and **15** be so cut from the sheet of stretchable leather material that the elastic threads **20** will extend in a diagonal direction of the sections **14** and **15** as shown. These threads when the sections **14** and **15** are embodied in a shoe should extend primarily lengthwise of the shoe but converge frontwardly in the toe area towards a central plane as indicated by the arrows *a* in Figs. 1 and 2.

Before the portions **14** and **15** are embodied in the shoe, the curved edges **21** thereof are preferably sewed together to form the central seam **22** extending upwardly along the throat of the shoe. The curved edge portion **23** of the shoe parts **14** and **15** may be sewed to the vamp portion **13** of the shoe along the seam **24**, and the straight portions **24'** may be sewed to the shank **25**, while the curved portions **26** may be secured to the counter by the seam **27**.

The sections **14** and **15** are so constructed with respect to the direction of stretch of the leather material that the lines of stretch of these two pieces of material in the shoe at the top of the foot converge frontwardly towards the longitudinally extending central seam **22**. The effect of the contractive force of the material **14** and **15** along these inclined lines is to hold the leather snugly but comfortable around the sides of the foot and to take up any slack that tends to form across the top of the foot as the shoe is bent, to thereby prevent the formation of the usual transverse creases or wrinkles in this part of the shoe. In this manner a soft glove like fit is secured.

Since in the construction shown the entire quarter area at each side of the shoe is made of stretchable leather, the shoe will stretch sufficiently around the foot receiving opening to permit the foot to be inserted in the shoe and removed therefrom when the entire throat of the shoe is closed by the seam **22** as shown. It will therefore be seen that in the present shoe the shoe string **28** and lacing anchoring strips **28'** are not necessary but are provided merely for ornamental purposes. This shoe string may constitute the stretchable elastic shoe string now on the market.

By employing the construction of the present invention whereby the line of stretch of the pieces of leather **14** and **15** are along converging paths across the top of the foot, and by extending this material backward along the sides of the foot toward the heel as indicated at **16**, the full strength of the contractive force of the elastic leather material is secured at the sides of the shoe, while the longitudinal strength at the top of the foot near the toe is somewhat reduced. This is in accordance with shoe requirements to prevent gapping at the sides and improve the fit of the shoe, and at the same time prevent an uncomfortable binding pressure upon the foot. The stretchable properties of the present shoe whereby it will conform accurately to the shape of the foot makes it unnecessary to build a shoe on a specially constructed last to secure a shoe that will accurately fit the foot of the wearer.

Since in the construction shown a large portion of the foot receiving opening is formed of the stretchable leather material, it is important to provide a smooth finished upper edge around the foot receiving opening which will not inter-

fere with the stretching of such material. This is accomplished in the construction shown by cutting away a marginal portion of the leather 17 at its inner face adjacent the foot receiving opening as indicated by 29 and by folding over upon itself this marginal portion of reduced thickness as indicated by 30 to provide a smooth rounded upper edge. A narrow strip of elastic webbing 31 may then be secured to the inner face of this folded over portion as best shown in Fig. 5. The strip of webbing 31 may be secured in place by the zig-zag stitch 32 or by an elastic stitch which will not interfere with the elasticity of the sewed materials.

The portion of the shoe indicated by 12 and 13 may be provided with the usual non-elastic lining, but it is unnecessary to provide the portions 14 and 15 of the shoe with any lining other than the elastic fabric 18.

The features of the present invention may be embodied in practically any type of shoe in which the area thereof extending over the top of the foot is formed of leather, but the advantages of the present shoe are more particularly noticeable in shoes having a relatively high throat, as for example in the type of shoe shown. While leather treated as above described may have imparted thereto a stretch of 50% transversely of the skin, the sections 14 and 15 need not have a stretch of more than about 15 or 20% to secure the advantage of the present invention.

Having thus described my invention what I desire to claim by Letters Patent is:

1. An oxford shoe having a substantial portion of the upper thereof including the part that creases across the top of the foot when the toes are bent formed of elastic plied material consisting of a smooth unwrinkled sheet of stretchable leather having a backing of one-way stretch woven elastic fabric adhesively secured thereto, a right and left section of said plied material being united in the shoe by a central seam extending up the instep and arranged so that the direction of maximum stretch of each section is along a line extending from adjacent the shank of the shoe frontwardly in an upwardly inclined direction to a point where said seam extends across said crease, each of said sections extending down to the sole at the shank of the shoe, whereby said sections will contract and stretch with the foot movement to prevent the formation of any appreciable transverse creases across the top of the foot.

2. An oxford shoe having a substantial portion of the upper thereof including the part that creases across the top of the foot when the toes are bent formed of elastic plied material consisting of a smooth, unwrinkled sheet of stretchable leather having a backing of one-way stretch elastic sheet material secured thereto, a section of said material being embodied in the shoe at each side of the foot and united by a central seam extending up the instep and arranged so that the direction of maximum stretch of each section is along a line extending from adjacent the shank of the shoe frontwardly in an upwardly inclined direction to a point where said seam extends across said crease, each of said sections extending down to the sole at the shank of the shoe, whereby said sections will contract and stretch with the foot movement to prevent the formation of an appreciable crease across the top of the foot.

EDWARD F. ROBERTS.