Aug. 29, 1939. L. J. McKESSON 2,171,243

FREQUENCY CONTROL SYSTEM

Filed May 14, 1937

Fig. 1

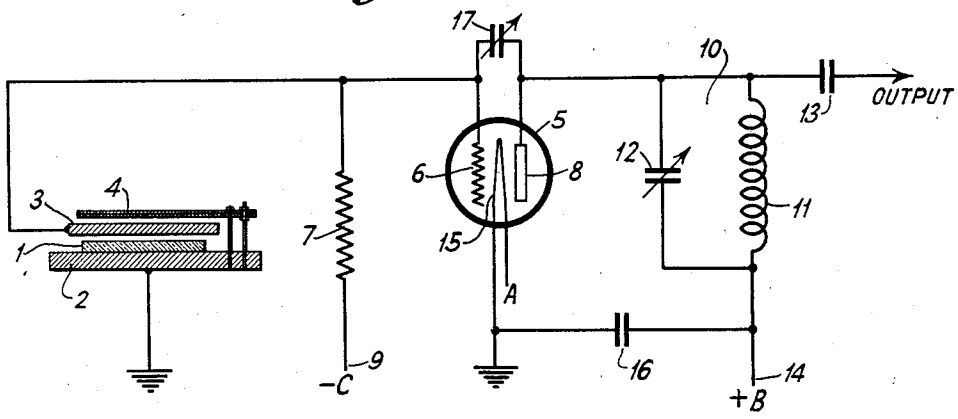

Fig. 2

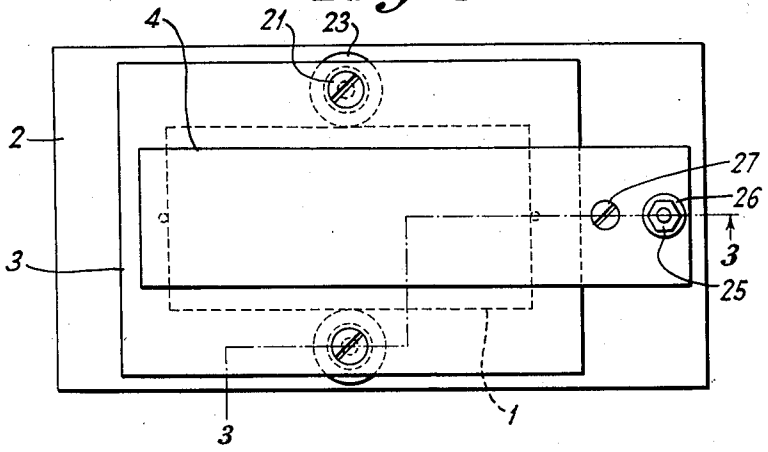

Fig. 3

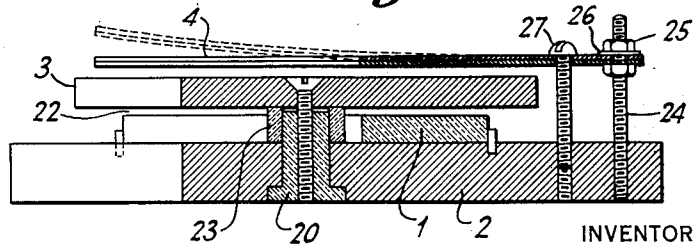

INVENTOR
L. J. McKESSON
BY H. S. Grover
ATTORNEY

Patented Aug. 29, 1939

2,171,243

UNITED STATES PATENT OFFICE

2,171,243

FREQUENCY CONTROL SYSTEM

Lewis J. McKesson, Port Jefferson, N. Y., assignor to Radio Corporation of America, a corporation of Delaware

Application May 14, 1937, Serial No. 142,612

4 Claims. (Cl. 171—327)

This invention relates to a new and novel method of frequency control compensation for controlling the frequency variations caused by temperature changes in oscillators or generators employing mechanical vibratory systems and more particularly to those employing piezo-electric elements.

An object of this invention is to provide an improved method of compensation for frequency variations caused by temperature variations of the circuit elements employed for frequency control systems, such as quartz crystals.

Another object of this invention is to provide an improved form of piezo-electric crystal holder in which the crystal element is interposed between a first and second electrode, the frequency variation caused by temperature changes being controlled by a bimetallic strip which is electrically connected to one of the electrodes in such a manner as to cause variation in capacity between the other electrode of a frequency control system.

A feature of this invention is that the frequency control system is provided with a physical air gap which remains constant and capacitive reactance across the electrodes is varied thermostatically to obtain a compensating effect upon the electrodes in the frequency circuit.

While methods of frequency control systems are old in the art, my invention provides a method of frequency control which is particularly adapted to piezo-electric oscillator units.

The most generally used method known in the prior art of controlling the frequency of radio transmitters is through the use of a piezo-electric element acting as a mechanical vibrating element which, because of its mechanical and electrical properties, is able to maintain an oscillatory circuit at a certain frequency. However, due to temperature changes of the quartz and the associated electrical and mechanical elements, the frequency of the oscillator will vary in accordance with the temperature.

There are several means of maintaining constant frequency now in use, but such means are expensive and subject to slight changes, for example, by cutting a quartz crystal at certain angles to its electrical and optical axis the temperature coefficient can be varied and reduced to zero. However, such crystals are very difficult to produce economically and a temperature coefficient may still be present due to temperature changes of the circuit and mechanical elements associated with the crystal.

In order to obtain the greatest frequency stability with crystal control consistent with satisfactory output, despite tuning and voltage changes in the circuits, an optimum air gap is required; this air gap will vary with different crystals, depending on their properties. By my invention, advantage of this optimum air gap condition can be maintained at all times irrespective of ambient or circuit element temperature changes.

This invention will best be described and understood by referring to the accompanying drawing, in which:

Fig. 1 is a typical oscillator circuit using a thermostatic element of my invention for frequency compensation;

Fig. 2 is a plan view of my improved frequency control system; and

Fig. 3 is a sectional elevation partly in section, the section being taken on lines 3—3 of Fig. 2.

Referring now in detail to Fig. 1 of the drawing, a quartz crystal 1 is shown interposed between metallic crystal electrodes 2 and 3, electrode 2 being maintained at an equivalent ground potential. Mechanically supported by and electrically connected to a crystal electrode 2 is a bimetallic strip 4 acting as a condenser plate or electrode which is arranged to be in capacitive relationship with the crystal electrode 3. Electrode 3 connects to the input of a thermionic device 5 or grid 6. A grid bias resistance 7 connects from grid 6 to a suitable bias supply 9. Plate 8 of thermionic device 5 connects to a tuned circuit 10 comprising inductance 11 and variable condenser 12, the output of which connects to an output condenser 13 and plate supply voltage 14. The cathode 15 is bypassed with the tuned circuit by a condenser 16. A variable condenser 17 is provided to feed back a small amount of energy to control feedback and generally control the amplitude of oscillation of the crystal. The values of capacitance of condensers 12 and 17 are adjusted to optimum values by methods well known to the art.

Figs. 2 and 3 show a detail of construction of a piezo-electric crystal holder employing the principles of my invention. The lower electrode 2 forms a support base for the crystal holder upon which crystal 1 is maintained in the conventional manner. Electrode 3 is supported from electrode 2 by insulating bushings 20 which are held in position by screws 21, the proper air gap 22 being maintained by spacers 23. Above the upper electrode 3 is located the bimetallic element 4 which is rigidly connected at one end to the lower electrode by stud 24, nuts 25 and

washers 26. Fine adjustment is made by means of the screw 27. This bimetallic plate forms a capacitive element with the upper electrode 3, the value of which will change in either a positive or negative manner with temperature; this capacitance change with temperature will change the frequency of oscillation of the crystal. By changing the capacity of the bimetallic plate to the upper electrode it is possible to vary the temperature coefficient of the entire unit in either a positive or negative manner over a large range. In actual practice, I have found that this adjustment is such that the frequency change caused by the capacitance change can be made equal and opposite to the frequency change due to the quartz element and its associated circuit; the result is then found to be a zero frequency variation for any temperature variation within the normal range of ambient temperatures encountered in practically all radio transmitter circuits.

Although only one form of frequency variation is possible, since the principle utilized in this invention is to vary the capacity through the mechanical movement of the bimetallic element 4, which movement is proportional to the temperature, a large number of methods of accomplishing this result can be devised, for example, inductance, capacitance or resistance values may be varied in similar manners to obtain similar results. Also, many circuit variations are possible and Fig. 1 is intended to show by example only how the application of the bimetallic element is used. Some circuits employ more than two electrodes on the piezo-electric element and this invention is applicable to such circuits to vary the capacitance between any two or more electrodes. Consequently, no attempt will be made to enumerate such modifications in this application and the invention is not to be limited, except as to such limitations as are clearly imposed in the appended claims.

What is claimed is:

1. A piezo-electric crystal holder comprising a flat metallic base member acting as a first electrode, a metallic plate forming a second electrode located above said first electrode and insulatingly secured thereto by two support members, a crystal interposed between said first and second electrodes, and a third electrode in variable capacitance relationship with said second electrode and electrically connected with said first electrode.

2. A piezo-electric crystal holder comprising a metallic base member acting as one electrode for said crystal holder, a crystal mounted on said metallic base member and secured in position by two pins located in said base, a second electrode insulatingly supported located above said crystal by a pair of spacing members, a pair of bushings and binding means between said second electrode and said bushings, and a third electrode in variable capacitance relationship with said second electrode and electrically connected to said first electrode.

3. A piezo-electric crystal holder comprising a base member acting as one electrode for said crystal holder, a crystal mounted on said base member, a second electrode located above said crystal, a third electrode comprising a bimetallic strip in variable capacitance relationship with said second electrode and electrically connected to said first electrode, and threaded means in said base member for adjusting said third electrode with respect to said second electrode.

4. A piezo-electric crystal holder comprising a base member acting as one electrode for said crystal holder, a crystal mounted on said base member, a second electrode insulatingly supported on said base member and located above said crystal, a third electrode comprising a bimetallic strip in variable capacitance relationship with said second electrode supported and electrically connected to said first electrode by a stud-like member, and means for adjusting said third electrode with respect to said second electrode.

LEWIS J. McKESSON.