(No Model.)

# J. H. BLESSING.

## COMBINED CHECK VALVE, STOP COCK, AND BLOW-OFF VALVE.

No. 272,635. Patented Feb. 20, 1883.

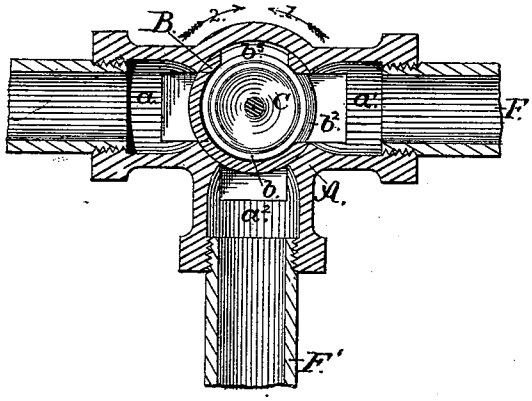


FIG. 2.

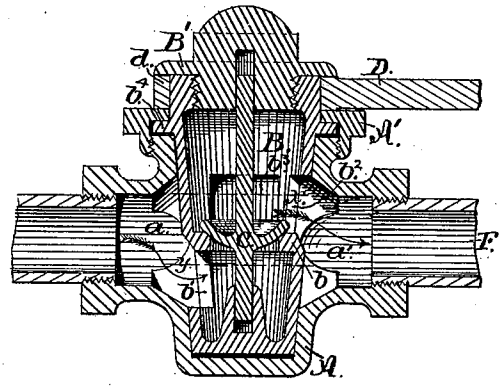


FIG. 1.

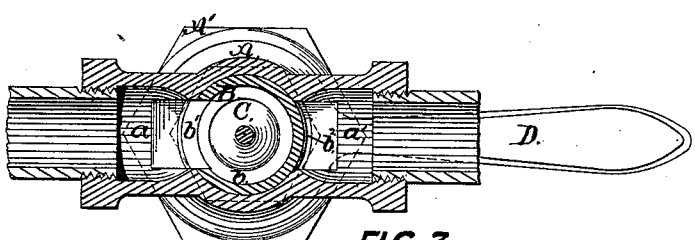


FIG. 3.

*Witnesses:*

H. V. Scattergood.

C. M. Hamlin.

*Inventor:*

J. H. BLESSING,

by William H. Low,

*Attorney.*

N. PETERS, Photo-Lithographer, Washington, D. C.

# UNITED STATES PATENT OFFICE.

JAMES H. BLESSING, OF ALBANY, NEW YORK.

## COMBINED CHECK-VALVE, STOP-COCK, AND BLOW-OFF VALVE.

SPECIFICATION forming part of Letters Patent No. 272,635, dated February 20, 1883.

Application filed November 25, 1882. (No model.)

*To all whom it may concern:*

Be it known that I, JAMES H. BLESSING, of the city and county of Albany, in the State of New York, have invented a certain new and useful Combined Check-Valve, Stop-Cock, and Blow-off Cock, of which the following is a full and exact description.

My invention relates to an improved appliance for the feed-water pipes of steam-boilers; and it consists in combining in one device a check-valve, a stop-cock, and a blow-off cock, either of which can be brought into immediate operation by simply turning the operating-handle of the device.

The object of my invention is to simplify the mode of controlling the water-supply in steam-boilers by dispensing with some of the many devices now commonly required for that purpose. This object I attain by means of the construction illustrated in the accompanying drawings, which form part of this specification, and in which—

Figure 1 is a longitudinal section of my device; Fig. 2, a horizontal section of the same, the section of the turning-plug being taken at the line X on Fig. 1; and Fig. 3, an inverted horizontal section of a modified form of my device adapted for use as a combined check-valve and stop-cock, the section of the turning-plug being taken at the line Y on Fig. 1.

As represented in the drawings, A is the casing of the device; B, the turning-plug; C, the puppet-valve contained in the plug B, and D the operating-handle.

The casing A is provided with a conical body for containing the plug B, and it is also provided with an induction-opening, *a*, and, as shown in Figs. 2 and 3, with an oppositely-located eduction-opening, *a'*, from which the water is conveyed into the boiler. As shown in Fig. 2, an additional eduction-opening, $a^2$, is arranged at right angles to the axial line of the openings *a* and *a'*, for the purpose of adapting the device to the requirements of a blow-off cock. For a purpose hereinafter explained, the openings *a* and *a'*, where they join upon the conical body of the casing, are enlarged on their upper and lower sides.

The turning-plug B is made hollow, and is provided at or near its middle with a valve-seat, *b*, which divides its cavity into an upper and lower chamber. An induction-opening, *b'*, is cut through one side of the plug below the valve-seat *b*, so as to conform to the lower part of the enlargement of the openings *a* and *a'* in the casing, and at the diametrically-opposite side of said plug, but above the valve-seat *b*, an eduction-opening, $b^2$, is made to correspond to the upper part of the enlargements of said openings *a* and *a'*. As shown in Figs. 1 and 2, a second eduction-opening, $b^3$, is cut through the side of the plug B above the valve-seat *b*, and so that it will stand at right angles to the openings *b'* and $b^2$, where, when the device is set to operate as a check-valve, as shown in the drawings, the said opening $b^3$ will lie against a blank part of the casing A. The plug B is ground into the conical body of the seat A, so as to form a water-tight joint therewith, and the said plug I preferably hold to its place in the casing A by means of the nut A', which engages on a screw-thread cut upon the upper part of the conical body, and bears upon a collar, $b^4$, formed on the upper part of the plug *b*.

Provision is made for inserting the valve C into its place in the plug B by means of an opening formed in the upper end of said plug. Said opening is closed by a cap, B', which screws thereinto, and by overlapping the eye *d* of the handle D secures the operating-handle in its place on the plug B.

The valve C is of the ordinary puppet variety, and is fitted to form a tight joint with the valve-seat *b*, so as to close the communication between the upper and lower chambers of the plug B. The said valve may be guided by means of stems, as shown in Fig. 1, or by any other suitable and well-known means.

The operating-handle D is fitted and secured to the plug B to range in line with the openings *b'* and $b^2$ in said plug, and in such manner that it serves as an index for the exact position of the eduction-opening $b^2$ when the openings in the plug are concealed from the eye, as they always are when the device is in working order.

The operation of my device, when constructed as shown in Figs. 1 and 2, is as follows: When the plug B is in the position shown in the drawings, the parts are ready for the device to operate as a check-valve, into which the water will enter through the induction-opening *a*, and after passing through

the opening in the valve-seat *b* it will pass out through the eduction-opening *a'*, and thence into the boiler. To perform the work of a stop-cock, the plug B should be turned one-fourth of a revolution in the direction indicated by arrow 1 in Fig. 2, and thereby the eduction-opening *a'* of the casing will be perfectly closed by the blank surface of the plug B, and the flow of water therethrough entirely shut off. When the plug B is set in the position shown in Fig. 2, and the device is required to do duty as a blow-off cock, the plug should be turned one-fourth of a revolution in the direction indicated by arrow 2 in Fig. 2, and by that movement the eduction-openings $b^2$ and $b^3$ in the plug will be brought into coincidence, respectively, with the eduction-openings $a^2$ and *a'* in the casing, thereby establishing an open communication over the top of the valve C from the pipe F (leading into the boiler) into the waste-pipe F', for discharging the water out of the device.

When the device is made with but two openings, as shown in Fig. 3, it will only serve the purpose of a combined check-valve and stop-cock, and while operating as a check-valve it can be brought into use as a stop-cock by giving the plug B one-fourth of a revolution in either direction.

By enlarging the openings *a* and *a'* in the casing in the manner herein shown and described the openings *b'* and $b^2$ in the plug may be brought into coincidence with either of the said openings in the casing, and thereby either end of the casing A may be optionally used for the induction. The described mode of constructing the said openings in the casing A is also useful for effecting the removal of any dirt or other obstruction that may lodge between the face of the valve C and its seat *b*, and prevent the proper action of the valve. In such cases, by reversing the plug B, so as to bring the induction-opening *b'* into conjunction with the eduction-opening *a'* of the casing, the water from the boiler, while under pressure, will flow back through the valve-opening in the seat *b* and wash away the obstructing matter.

By securing the handle D to the plug B, so that it must always project from the side of the plug directly over and in line with the eduction-opening $b^2$, it serves as a reliable index for determining the exact position of the said eduction-opening in its relation to the openings in the casing A.

I claim as my invention—

1. The combination, with the casing A, provided with the openings *a*, *a'*, and $a^2$, having enlargements on their upper and lower sides at their points of junction with the conical body of said casing, as herein set forth, of a reversible hollow plug, B, provided with openings *b'*, $b^2$, and $b^3$, severally arranged in relation to the upper and lower chambers of said plug, as herein shown and described, and the valve C, the whole being so constructed and arranged that the device may be optionally operated either as a check-valve, a stop-cock, or a blow-off cock, as herein specified.

2. The combination, with a casing, A, having induction-opening *a* and eduction-opening *a'*, enlarged at their junction with the conical body of said casing, of a reversible hollow plug, B, provided with openings *b'* and $b^2$, adapted to interchangeably connect with the openings *a* and *a'* of the casing A, and the valve C, all constructed and arranged to operate as and for the purpose herein specified.

3. In a combined check-valve and stop-stock, the combination, with a rotatable hollow plug, B, containing a puppet-valve, C, and provided with an eduction-opening, $b^2$, as herein described, of an operating-handle, D, secured to the plug B, in relation to the eduction-opening $b^2$, as herein set forth, and adapted to operate as an index to the position of the said eduction-opening, as and for the purpose herein specified.

4. The combination, with the hollow plug B, provided with an opening in its head for the purpose of introducing a valve, C, into the cavity of said plug, as herein described, of the screw-cap B', adapted to close the head of the plug B, and to secure the operating-handle D to said plug, as herein specified.

JAMES H. BLESSING.

Witnesses:
WILLIAM H. LOW,
T. W. LARWOOD.