Aug. 16, 1932. A. ROCCA 1,871,917

APPARATUS FOR COVERING THE OUTSIDE SURFACE OF METAL PIPES WITH A MIXTURE OF FIBROUS SUBSTANCES AND HYDRAULIC CEMENT SUBSTANCES

Filed Aug. 11, 1928 4 Sheets-Sheet 1

Fig. 1.

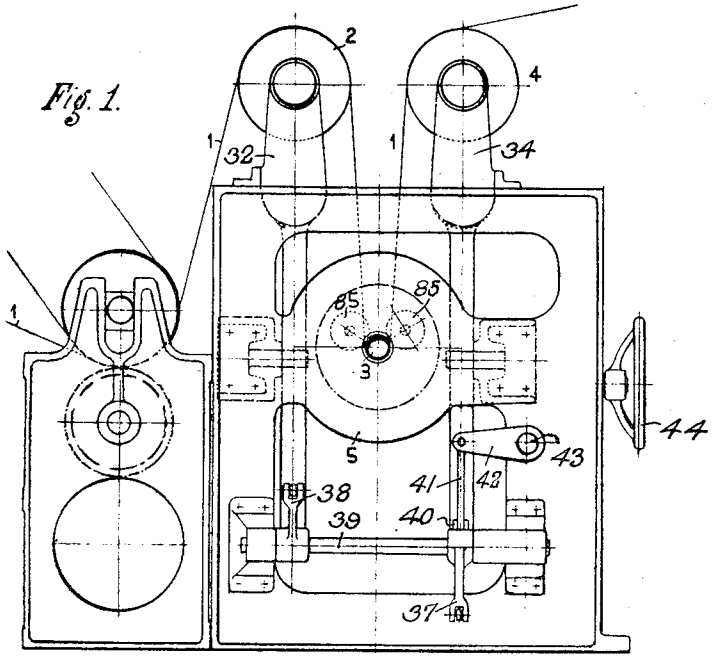

Fig. 3.

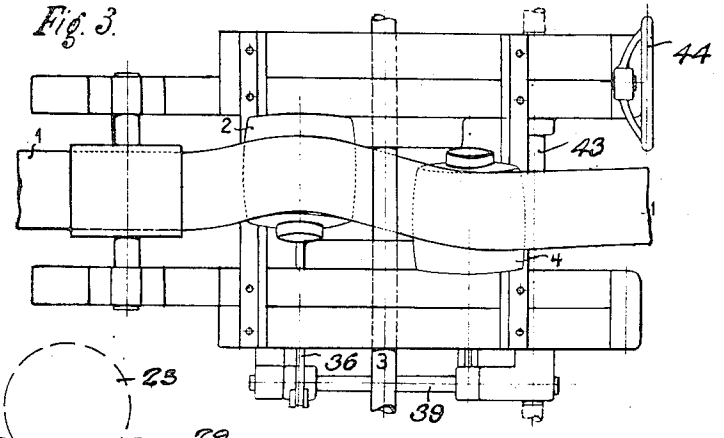

Fig. 9.

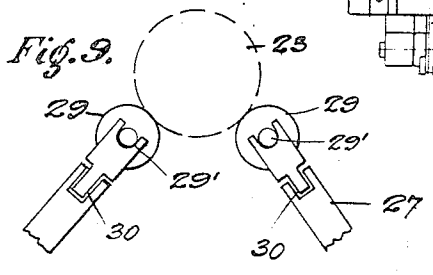

Inventor
Agostino Rocca
By Knight Bros
Attys

Aug. 16, 1932. A. ROCCA 1,871,917

APPARATUS FOR COVERING THE OUTSIDE SURFACE OF METAL PIPES WITH A MIXTURE OF FIBROUS SUBSTANCES AND HYDRAULIC CEMENT SUBSTANCES

Filed Aug. 11, 1928 4 Sheets-Sheet 2

Fig. 6.

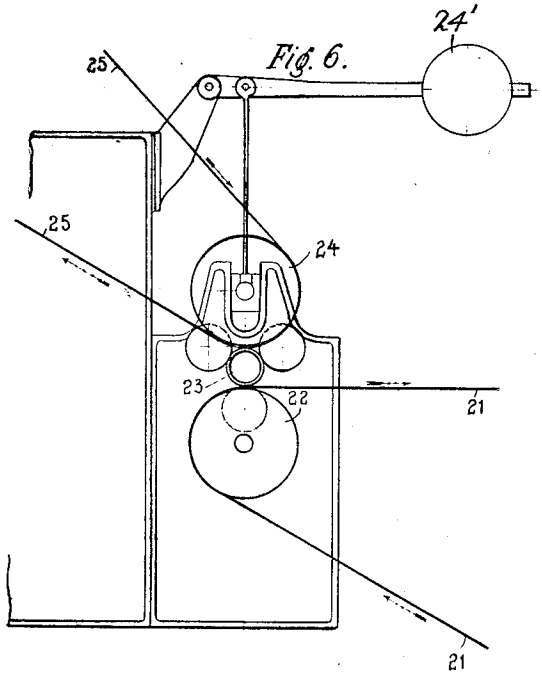

Fig. 7.

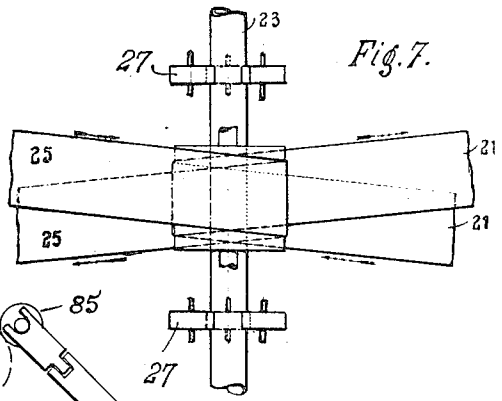

Fig. 1a

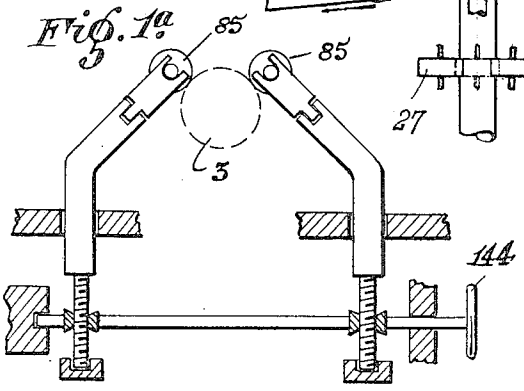

Inventor
Agostino Rocca
By Knight Bros
Attys

Aug. 16, 1932. A. ROCCA 1,871,917

APPARATUS FOR COVERING THE OUTSIDE SURFACE OF METAL PIPES WITH A MIXTURE OF FIBROUS SUBSTANCES AND HYDRAULIC CEMENT SUBSTANCES

Filed Aug. 11, 1928 4 Sheets-Sheet 3

Fig. 2.

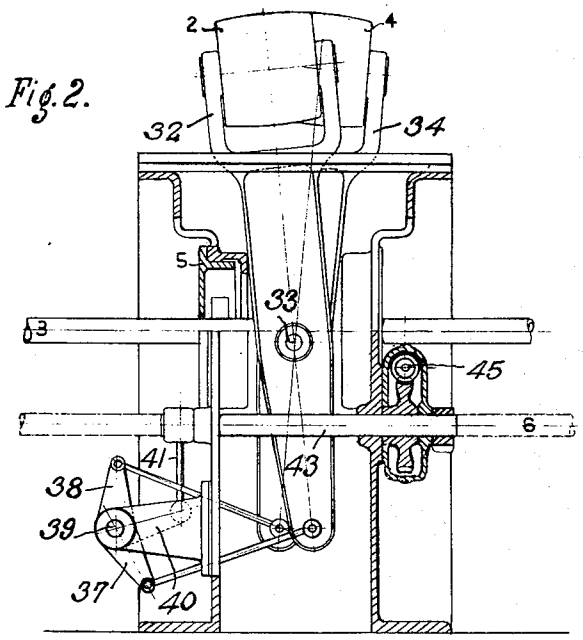

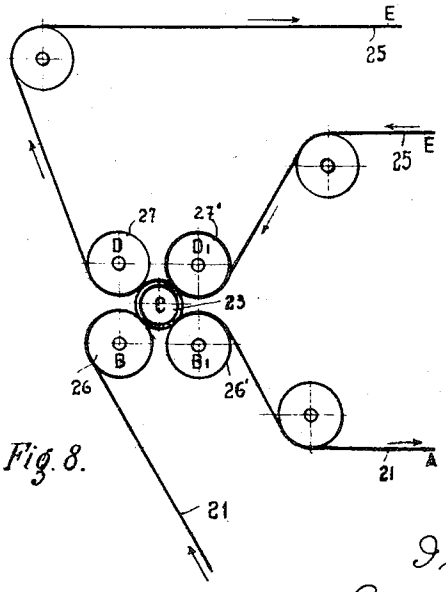

Fig. 8.

Inventor
Agostino Rocca
By Knight Bros
Attys

Aug. 16, 1932. A. ROCCA 1,871,917

APPARATUS FOR COVERING THE OUTSIDE SURFACE OF METAL PIPES WITH A MIXTURE OF FIBROUS SUBSTANCES AND HYDRAULIC CEMENT SUBSTANCES

Filed Aug. 11, 1928 4 Sheets-Sheet 4

Fig. 4.

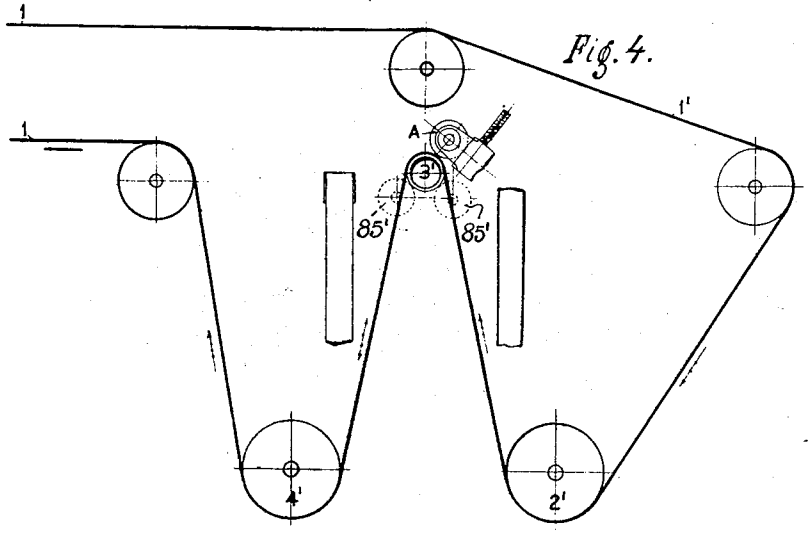

Fig. 5.

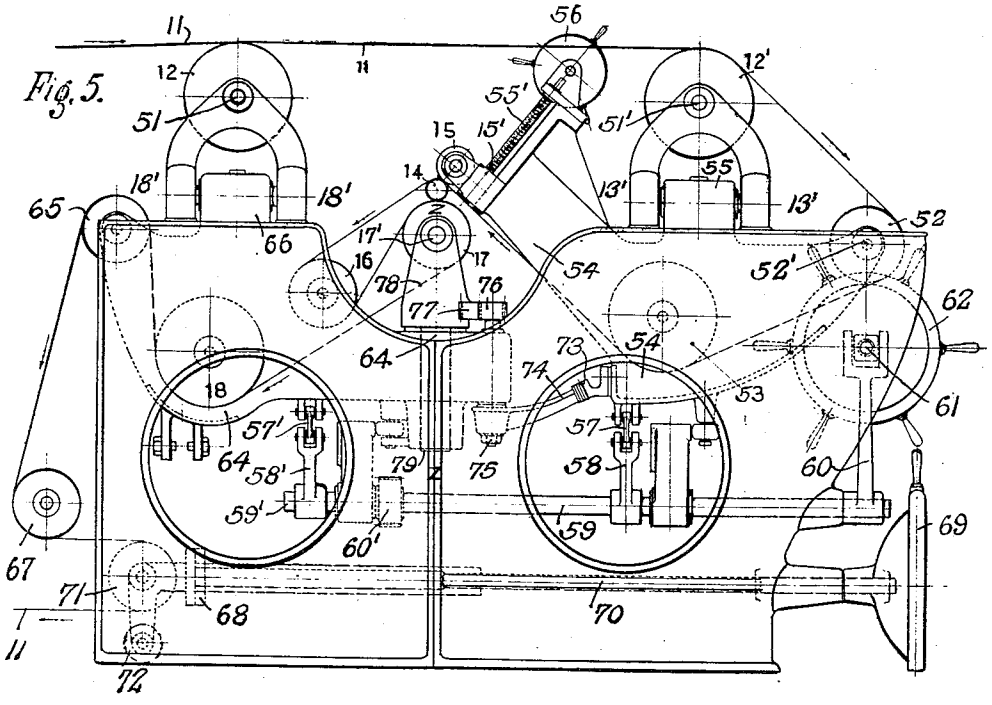

Fig. 5a.

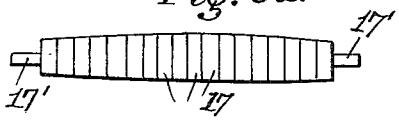

Inventor
Agostino Rocca
By Knight Bros
Attys

Patented Aug. 16, 1932 1,871,917

UNITED STATES PATENT OFFICE

AGOSTINO ROCCA, OF DALMINE, ITALY

APPARATUS FOR COVERING THE OUTSIDE SURFACE OF METAL PIPES WITH A MIXTURE OF FIBROUS SUBSTANCES AND HYDRAULIC CEMENT SUBSTANCES

Application filed August 11, 1928, Serial No. 298,978, and in Italy August 18, 1927.

It is well known that metal pipes embedded in the ground or installed in the open are liable to corrosion if they are not protected by a suitable covering. The covering must be possessed of sufficient mechanical strength to withstand the abrasive and breaking actions to which it may be subjected in transport, through the erection manipulations, through subsiding of the ground and so on. It must also be possessed of resistance to chemical corrosions, which may be due either to the simple moisture of the soil in which the pipe is embedded or to the sometimes very strong chemical or electro-chemical actions arising from the particularly acid or alkaline conditions of the medium in which the pipe is erected. The covering, of course, must show no breaks of continuity, must be impervious and must be absolutely resistant to the mentioned chemical actions. Among the various covering types in use the most generally adopted is that consisting of tar, asphalt and jute, the jute being spirally wound on the pipe. This type of covering has thus far proved to be the best owing to its efficient protection of the metal, unlimited durability, elasticity (which is indispensable, especially with long steel pipes), simplicity of application and so on.

The subject matter of the present invention is a covering type which complies with all the said characteristic requirements to an equal or even greater extent and in addition is cheaper than the coverings at present employed and is specially suitable for Mannesmann pipes.

The present invention refers only to the outside covering of metal pipes. A very long experience has shown that the eventual corrosion of metal pipings always proceeds from the outside to the inside, with the exception of quite rare cases due to quite special causes. It is therefore the outer surface that must be protected and to which the greatest attention has always been devoted. For the inner surface, the coating with tar, as generally employed, is amply sufficient.

Cement coverings have been sometimes applied with empirical processes, but with good results. According to the present invention, by mingling with the cement a certain amount of fibrous substances it becomes possible to carry out the covering on industrial lines, the ordinary paper or cardboard machines with convenient adaptations being used for the purpose. A covering is thus realized which is more tenacious, elastic, tough and less thick as compared with the cement coverings above mentioned.

It is important to point out that the novel covering can also be applied on another protective layer and in particular on tar. It is therefore practicable, to first dip the (previously heated) pipes into liquid tar, thus lining the inner and outer pipe surfaces with a thin layer of tar, the cement covering being afterward applied on the outer pipe surface. The pipes are thus doubly protected and capable of withstanding the attacking action of any soil.

The covering according to the invention must, of course, be left to mature in a moist medium or better in water tanks like any cement conglomerate.

The annexed drawings show an illustrative example of the invention.

Fig. 1 shows a side view of a machine for covering the tubes.

Fig. 1*a* is a detailed view, partly in section, of a part of Fig. 1.

Fig. 2 is a section on a vertical plane.

Fig. 3 is a plan view.

Fig. 4 shows the diagram of a machine similar to the above, the working parts thereof are inverted in respect to those of the machine of Fig. 1.

Fig. 5 shows an additional device to lessen the stresses exerted on the covering by the travelling felt.

Fig. 5*a* shows a detail of Fig. 5 in elevation.

Figs. 6 and 7 show a modified form of the machine respectively in longitudinal view and in plan.

Fig. 8 shows another modification.

Fig. 9 shows in more detailed form the supporting device indicated by reference numeral 27 in Fig. 7.

The portion of the plant relating to the preparation and drying of the mixture layer on the travelling belt 1 is not shown, these

operations being performed in ordinary paper and cardboard machines. The travelling belt passes round the roller 2 and round the pipe 3, on which latter it deposits the mixture layer; after this the belt passes on to the roller 4 and continues its cycle, returning to the tanks in which the mixture is prepared.

As the travelling felt is only a few centimeters or decimeters in breadth whereas the pipes normally are as much as 14 m. long, it is obvious that in order to be covered over its whole length the pipe must, not only revolve, but also travel longitudinally. The pitch of the spiral depends upon the inclination of the belt relatively to the axis of the pipe and, the inclination of the belt being the same, upon the pipe diameter. The felt inclination must therefore be readily adjustable. Fig. 1 shows in end elevation, Fig. 2 in vertical section and Fig. 3 in plan, an arrangement for varying the inclination by reciprocally and simultaneously altering the position of the supports of the rollers 2 and 4 by means of levers or gear wheels. The rollers 2, 4 are freely rotatable at the upper forked end of arms 32 and 34 respectively, pivoted about midway of their length on a horizontal pin 33. The lower ends of the brackets 32 and 34 are connected by links 35, 36 respectively to rocking levers 37, 38 fixed on shaft 39. A lever 40, mounted on said shaft 39 is moved through link 41 by a lever 42 keyed on shaft 43 controlled by hand-wheel 44 through worm gear 45.

The winding angle being great and the contact surface between the felt and the pipe being accordingly large, the rotative and travelling movement of the pipe can be brought about by the felt itself by friction. As a consequence, the peripheral velocity of the pipe depends upon the travelling velocity of the felt, and the pipe travelling movement depends both upon the felt velocity and the inclination angle of the felt relatively to the pipe (more precisely, therefore, upon the felt speed component in the direction of the pipe axis). If the relative inclination of the two rollers is reversed, also the direction of the axial travelling of the pipe is simultaneously reversed; it is therefore practicable to carry out the covering also with cross and overlapping spirals. It is also practicable to apply as many layers of mixture as may be desired in order to obtain a covering having the required thickness, which as a rule may be confined to a few millimeters.

In order to counteract the tendency of the felt to raise the pipe and in order to secure between the felt and the pipe the amount of pressure requisite to carry out the covering, the weight of the pipe itself is sometimes sufficient, provided the height of the supports arranged at the machine sides for supporting the pipe over all its length is conveniently adjusted. It is advisable, however, that special supports capable of counteracting the said tendency of the felt should be arranged on the machine itself. One type of support is shown schematically in Figs. 1 and 2, wherein it is indicated by the numeral 5. This type comprises a sleeve enclosing two, or more rollers 85 lined with felt, india rubber or other substance which will not remove the covering from the pipe. These rollers are revolving loose on their axis which, being hinge connected can incline itself so as to make the rollers revolve in contact with the pipe without giving rise to sliding friction, viz. so as to permit the rollers to take up a position in which their diametral plane is parallel to the longitudinal generating lines of the felt where the latter partly embraces the pipe, as shown in Fig. 1*a*. The rollers can be raised and lowered by means of levers or gear wheels, in order to allow the same supports to be used in connection with pipes of different diameter. In the embodiment shown in Fig. 1*a*, the rollers are raised and lowered by the rotation of hand wheel 144 to effect the movement of rollers 85 by suitable transmission means. The function of these supports serving to counteract the vertical thrust is advantageous also owing to the compression exerted by the rollers on the covering inasmuch as they improve the covering and squeeze out its excess water. The said function becomes indispensable when it is desired to further improve the toughness and homogeneity of the covering by increasing the compression by arranging under the travelling felt, in correspondence to the bottom generating line of the pipe 3, a cylinder which with the help of counterweights, springs or the like shall compress the mixture at the moment it is deposited on the pipe and allow of the compression being adjusted at will, as is correspondingly illustrated in conjunction with Fig. 6.

The compression is necessary in order to impart to the covering a toughness and strength sufficient to make it stand the pressure exerted on the roller by the side supports as well as the stresses to which the covering is subjected in transport from the machine to the ageing tanks.

With pipes of greater diameter or greater weight the felt friction may be insufficient to bring about the revolving and travelling movements of the pipe because, if the said friction exceeds a certain limit, discontinuities or cracks in the mixture layer interposed between the pipe and the felt will be the consequence or the covering will be rolled and detach itself from the pipe.

A prominent feature of the machine according to my invention is the simplicity of the various devices, as well as the lightness resulting from the limited breadth of the travelling felt, which it is not desirable to increase beyond a few decimeters. The machines of this type can be arranged in paral-

lel in order to achieve the covering more rapidly, several spirals being applied at a time.

Of course the characteristic features of the machine are not altered if its working parts are inverted as in Fig. 4. In this case the supporting rollers 85′ are inverted and remain beneath the pipe. They may also not be part of the main machine and be arranged outside of it as separate supports, in a sufficient number to carry the weight of the pipe, that is to say, in such a manner that the specific pressure exerted on the covering cannot reach such a value as to bring about discontinuities in the covering or roll and detach it from the pipe. The pressure cylinder A in this case is arranged on top of the pipe or sideways of its upper portion.

When the covering has to be relatively thick, the devices thus far described are no longer sufficient to ensure that the work will be carried out in a faultless manner. It may happen that the driving force from the felt to the pipe, the whole of which is transmitted by the covering, induces such tangential stresses in the covering that it is detached from the pipe. This trouble can be obviated by providing a further member serving to lessen the stresses put on the covering by the travelling felt. For this purpose we have designed the machine shown in Fig. 5.

The felt 11, (coated with a mixture layer by a device not shown and not forming part of the invention), passes over rollers 12, 12′ freely rotatable on shaft 51, 51′ and over a roller 52 suitably actuated (in the manner more fully described hereinafter) so as to permit the inclination variations which the felt must undergo in order to effect a spiral winding on the pipe. The felt then passes over the roller 53, pivoted on a member 54, journalled at a boss 55 about axis 13′—13′. The member 54 extends upwardly and carries a slide block 15′ having a pressing roller 15 pivoted on it. The slide block 15′ may be lowered or raised by means of a worm 55′ controlled by a hand wheel 56, in order to adjust the position of the roller 15 according to the diameter of the pipe 14. The member 54 extends also rearwardly of the machine viewed from the left, and carries the roller 52 freely mounted on pivot 52′. The member 54 may be rocked about its axis 13′—13′ by means of link 57, lever 58, shaft 59, lever 60, worm wheel 61 and wheel 62, similarly to the device described with reference to Fig. 1. When the member 54 is rocked, the rollers 52, 53 and 15 will swing accordingly and the felt 11 obtains the desired inclination. From roller 53, the felt proceeds to embrace the pipe 14 and deposit the covering mixture upon it. A jockey roller 16 conveys the felt back to the roller 17 where the felt comes again into contact with pipe 14 and passes on to the roller 18. The roller 18 is arranged symmetrically with the roller 53 and its support swings by means of a boss 66 about the axis 18′, 18′ (which is the extension of the axis 13′, 13′). The roller 18 is adjusted reciprocally and simultaneously with the roller 53 by means of a link 57′ and lever 58′ fixed on a shaft 59′ parallel to the shaft 59 and connected to it by a gear 60′ which reverses the direction of rotation of the shaft 59. On leaving the roller 18 the felt goes to complete its cycle, being led over jockey rollers 65, 67 and subjected to the action of tightening device 68 controlled by the hand wheel 69 through a worm 70. The device 68 carries a tightening roller 71 over which the felt 11 passes, and is provided by a support roller 72, running on the floor.

The characteristic feature of this apparatus (the various parts of which are susceptible of numerous modifications without departing from its fundamental ideas) consists in the fact that the pipe is simultaneously subjected to the pressure exerted by the felt and to an equal pressure but opposite in direction exerted by the roller 17 rotatably mounted in the member 64′ on pivot 17′. In this manner the pipe is maintained in equilibrium conditions during the application of the covering, whereby the covering is freed from secondary stresses, is compressed while in progress of building and its excess water pressed out, greater compactness and homogeneity being thus secured. It is important to point out that this second compression takes place through the interposed felt; as it is the felt that imparts the revolving movement to the pipe, not only no new tangential stresses are induced in the covering but the tangential stress causing the pipe to revolve is much reduced in intensity. In order that the device may work without slip and without secondary stresses two conditions must be fulfilled:

(1) The rollers 15 and 17, as they are tilted along with the tilting of the supports 54, 64 of the rollers 53 and 18, must have a convex instead of a cylindrical profile. It is desirable that the roller 17, being embraced by the felt over nearly the whole of its periphery, be divided into segments capable of running loose on the roller axis 17′ in order to prevent the felt from slipping due to the different peripheral velocities existing at the different points of the roller surface.

(2) The roller 17 must be endowed with a double motion. It it were simply fixed to the movable support of the roller 18, the axis of roller 17 would always remain parallel to the axis of roller 18 and no inconvenience would ensue if the machine were working without the felt being inclined relatively to the pipe. Since however such an inclination is always necessary in order that the covering may be wound on the pipe spirally, it is indispensable for the roller 17 to be susceptible of being disposed with its diametral plane accurately parallel to the

center line of the felt in the contact zone between the felt and the roller. The said inclination must therefore increase or diminish according as the pitch of the winding spiral is increased or diminished. This condition is complied with by causing the axis 17′ of the roller 17 to swing about an axis *z—z* perpendicular to 18′ and taking up the vertical position when the machine is in rest position. By means of toothed segment 73 meshing with another toothed segment 74 keyed on the shaft 75 of a toothed wheel 76 meshing with curved rack 77 integral with the stirrup member 78 carrying the roller 17, the axis inclination of said roller relatively to the tube axis is varied synchronously with the inclination of the rollers 53 and 18. The stirrup member 78 is journalled by spindle 79 on the member 64′.

A noteworthy characteristic feature of this device is also the possibility of large helical feeds, the carrying out of the covering being thus accelerated.

A third apparatus for the application of the present invention is illustrated in Figs. 6 and 7 in front elevation and plan respectively.

Also here it is deemed unnecessary to illustrate the machine (which is of the same type as those in use for paper or cardboard manufacture) for preparing the mixture on the carrier felt 21. Over the cylinder 22, on which the felt passes in order to perform and complete its cycle, rests the pipe 23 to be covered and on which the mixture leaving the felt is deposited. The pipe receives a rotative and an axial travelling movement as in the case of the ordinary tar and jute coverings. As is already done with the latter coverings, it is sometimes convenient to impart to the pipe a revolving movement alone and to let the machine perform a travelling motion in a direction parallel to the axis of the pipe. The axial travelling movement of the pipe, or of the machine, must of course be suited to the inclination of the felt. The peripheral velocity of the revolving pipe must be equal to the linear velocity of the felt 21. The pipe must be conveniently carried on supports 27 (Fig. 7), in order to prevent its performing a rolling movement in addition to the revolving movement, so as to keep the pipe centred. The supports, like those already described in connection with the first covering device must allow the movements of the pipe and keep the friction low; the friction must be a rolling friction only, in order not to tear the covering. A suitable form of supports is represented in Fig. 9 of the annexed drawings. The supports simply consist in a set of conveniently jacketed rollers 29 revolving loose on their axes 29′, which in their turn must be pivotally connected, as at 30, so as to allow the rollers to incline themselves relatively to axis of the pipe in dependence upon the velocity of its avial travelling movement.

It has been said above that in order to obtain a better covering it is necessary to compress it while in progress of building. Also with this machine type it is important to bear in mind that the compression should be applied in such a manner that no element produces a sliding friction on the covering that is being made. To this end arrangements are used, one type of which is diagrammatically shown in Fig. 6 and consists in the provision of the pressure cylinder 24. On this cylinder passes a second felt 25 driven at a velocity equal to that of the felt 21 and having the same inclination relatively to the pipe. The compression exerted by the cylinder 24 can be adjusted by means of counterweights 24′ or other pressure means, and the felt inclination can be adjusted by arrangements similar to those set out above. The inclination of the felt 25 should be adjusted synchronously with that of the felt 21.

Each of the two rollers 22 and 24 in Fig. 6 can be replaced by two or more rollers allowing a partial embracing of the pipe as in Fig. 8, (rollers 26—26′ and 27—27′). In this case the movements can be imparted to the pipe by the felts 21 and 25 themselves.

Also with this arrangement it is desirable to limit the felt breadth to a few centimeters, the construction and working of the machine being thus simplified. Two or more such machines can be grouped together and made to work in parallel.

The constructive and form details may be varied from those described and illustrated within the scope and spirit of the invention.

Experience has shown that the described machine for carrying out the covering of metal pipes can also be used (with suitable slight adaptations) for the manufacture of pipes made of the same mixture of fibrous substances and hydraulic cement substances.

To this end it is sufficient to cover with the said mixture a core or mandrel (preferably hollow for lightness sake), the outside diameter of which has been turned down to slightly less than the inside diameter of the pipe to be manufactured. The said core or mandrel should be slightly longer than the pipe to be made, and the thickness of the pipe depends upon the number of mixture layers that will be spirally wound round the core in the manner already described in connection with the building of the pipe-covering.

In order to insure that the pipe will be detachable from the mandrel, all that is required is to exert a slight rolling action on the pipe in progress of building; this can be effected either by the carrying belt, or by the support rollers, or by separate members. The detachment is facilitated if the pipe ends are cut while the pipe is still revolving and before it is subjected to the rolling action just

mentioned. A practical means consists in cutting the pipe ends before the pipe passes under the belt to receive the last layer of mixture; by so doing, the completion of the pipe thickness and the desired rolling are obtained simultaneously.

With suitable contrivances it is an easy matter to thread the pipe off the covering and to carry it to the rooms where the setting of the cement is to take place.

The most convenient machine for this pipe manufacture is the one which we have called "enveloping couple machine". The characteristic features of this process are essentially the following:

(*a*) The length of the obtainable pipes is independent of the breadth of the belt and of the machine and attains limits that are beyond those of the cement pipes manufactured with other systems:

(*b*) The pipe is obtained by means of the superposition of a plurality of cross spirals, wherewith a perfect homogeneity of the thickness is secured.

(*c*) In addition to the compression applied during the laying on of the mixture layer, a further compression takes places on the rollers of the lateral supports. In this manner each layer is compressed and its water squeezed out before the next layer is laid on, which secures an exceptional toughness and strength so as to allow the employment of pipes of even very small wall thickness.

Having now particularly described and ascertained the nature of my said invention and in what manner the same is to be performed, I declare that what I claim is:—

1. A machine for covering the outer surface of a cylindrical body with a plastic material, which comprises a travelling endless band carrying a layer of plastic material and having a width substantially less than the length of the cylindrical body, supporting means for the cylindrical body adapted to permit rotary and axial movement thereof, means guiding said band into contact with the cylindrical body, said guiding means being arranged to incline the direction of travel of the portion of said band which engages the cylindrical body with respect to the axis of the latter.

2. A machine as specified in claim 1, in which said guiding means is adjustably mounted to permit variation of the angle between the direction of travel of the portion of said band engaging the cylindrical body and the axis of the cylindrical body.

3. A machine as specified in claim 1 in which said guiding means is so mounted as to permit the direction of travel of the portion of said band engaging the cylindrical body to be inclined alternatively to either side of a diametral plane of the cylindrical body.

4. The combination with a machine as specified in claim 1, of means for compressing the plastic material against the cylindrical body.

5. A machine as specified in claim 1, in which said supporting means are adapted to compress the plastic material onto the cylindrical body.

6. The combination with a machine as specified in claim 1, of roller means for pressing said band against the cylindrical body as it deposits the plastic material thereon.

7. The combination with a machine as specified in claim 1, of means for compressing the plastic material on the cylindrical body, comprising a roller inclined to the axis of the cylindrical body in accordance with the pitch of the helical path traversed by a point on the periphery of the cylindrical body.

8. The combination with a machine as specified in claim 1, of means for compressing the plastic material on the cylindrical body, comprising one or more loosely mounted rollers engaging the plastic material on the cylindrical body and mounted in such a manner as to permit them to adjust themselves to the direction of travel of the periphery of the cylindrical body.

9. The combination with a machine as specified in claim 1, of means for compressing the plastic material on the cylindrical body, comprising a roller inclined to the axis of the cylindrical body in accordance with the pitch of the helical path traversed by a point on the periphery of the cylindrical body, and means for applying an adjustable pressure to said roller.

10. The combination with a machine as specified in claim 1, of driving means engaging the periphery of the cylindrical body upon the side opposite the place of contact of said band with said cylindrical body and in a direction opposite to the direction of travel of said band at said place of contact.

11. The combination with a machine as specified in claim 1, of means guiding said band into contact with the periphery of said cylindrical body upon the side opposite said first mentioned place of contact and with a direction of travel opposite to the direction of travel of the band at said first mentioned place of contact.

12. A machine as specified in claim 1, in which said guiding means comprise rollers, axles therefor, and means mounting said axles for adjustment about an axis perpendicular to the axis of the cylindrical body.

13. A machine as specified in claim 1, in which said guiding means comprise rollers, axles therefor, means mounting said axles for adjustment about an axis perpendicular to the axis of the cylindrical body, and control means for imparting equal and opposite adjustments to said mounting means around their common axis.

14. The combination with a machine as specified in claim 1, of driving means engaging the periphery of the cylindrical body upon the side opposite the place of contact of said band with said cylindrical body and in a direction opposite to the direction of travel of said band at said place of contact, means for adjusting said guiding means to vary the direction of travel of said band at said place of contact, and means for adjusting said driving means to change the direction of its drive.

15. The combination with a machine as specified in claim 1, of driving means engaging the periphery of the cylindrical body upon the side opposite the place of contact of said band with said cylindrical body and in a direction opposite to the direction of travel of said band at said place of contact, means for adjusting said guiding means to vary the direction of travel of said band at said place of contact, means for adjusting said driving means to change the direction of its drive, and connections between said adjusting means constraining their adjustments to conform one to the other.

16. The combination with a machine as specified in claim 1, of one or more additional bands engaging the cylindrical body, means for imparting longitudinal travel thereto, and guide means arranged to impart to said additional band or bands a direction of travel, at the place of contact with the cylindrical body, parallel to the direction of travel of said first mentioned band, at its place of contact with the cylindrical body.

17. The combination with a machine as specified in claim 1, of one or more additional bands engaging the cylindrical body, means for imparting longitudinal travel thereto, guide means arranged to impart to said additional band or bands a direction of travel, at the place of contact with the cylindrical body, parallel to the direction of travel of said first mentioned band, at its place of contact with the cylindrical body, and means for simultaneously adjusting all of said guide means to vary the direction of travel of said bands at their places of contact with the cylindrical body while maintaining them parallel.

18. A machine for covering the outer surface of a cylindrical body with a plastic material, comprising a travelling endless band carrying a layer of plastic material and having a width substantially less than the length of the cylindrical body, supporting means for the cylindrical body, rollers to guide said band into contact with the cylindrical body, said rollers being pivoted on members adapted to swing in opposite direction about a substantially horizontal axis, means positively connecting said members and means for controlling the inclined position of said members.

19. A machine for covering the outer surface of a cylindrical body with a plastic material, comprising a travelling endless band carrying a layer of plastic material and having a width substantially less than the length of the cylindrical body, rollers to guide said band into contact with the cylindrical body, supporting means for the cylindrical body, said rollers being pivoted on members adapted to swing in opposite direction about a substantially horizontal axis, means positively connecting said members and means for controlling the inclined positions of said members, a toothed segment integral with one of said members meshing with a corresponding segment mounted on a substantially vertical pivot supported by the other member, a toothed member keyed on the upper end of said pivot, a curved rack meshing with said wheel and integral with a stirrup member pivoted on said other member about a substantially vertical axis and provided with a roller submitted to the weight of the cylindrical body.

AGOSTINO ROCCA.