Aug. 22, 1939. J. B. OHLSON 2,170,763

DRYING SYSTEM

Filed May 4, 1936 5 Sheets-Sheet 1

Fig. 1.

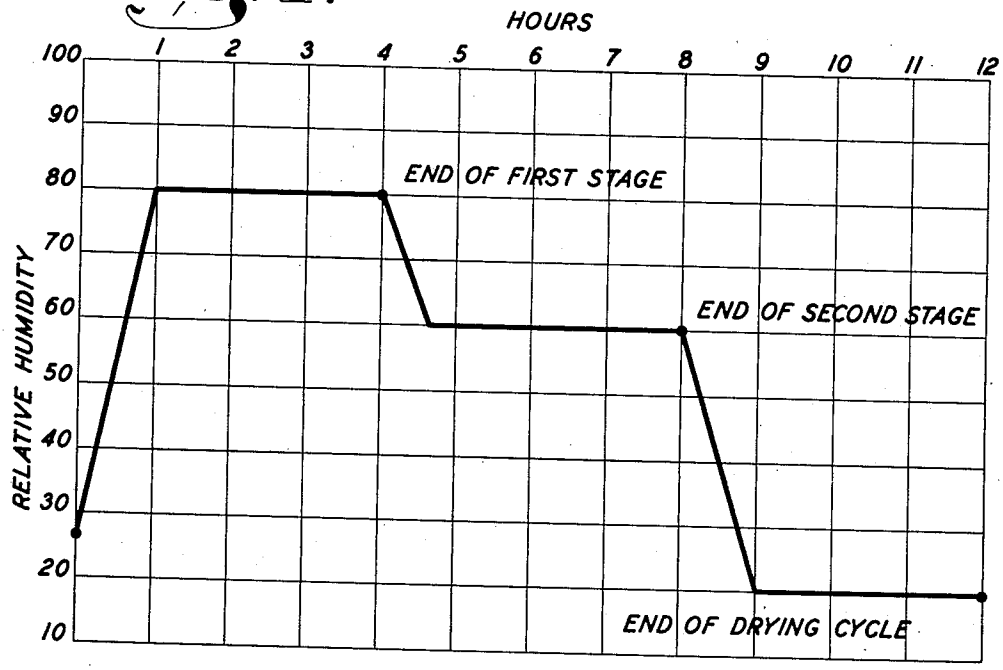

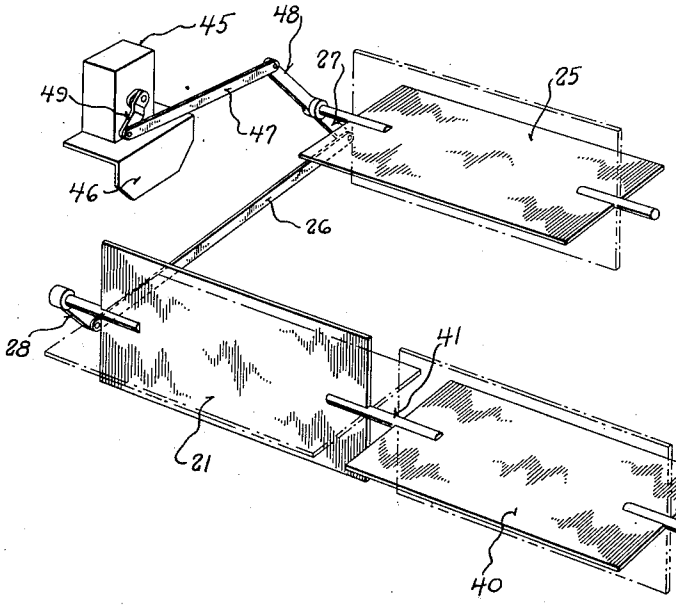

Fig. 7.

Inventor
John B. Ohlson
By Smith & Dorsey
Attorneys

Aug. 22, 1939. J. B. OHLSON 2,170,763

DRYING SYSTEM

Filed May 4, 1936 5 Sheets-Sheet 2

Fig. 2.

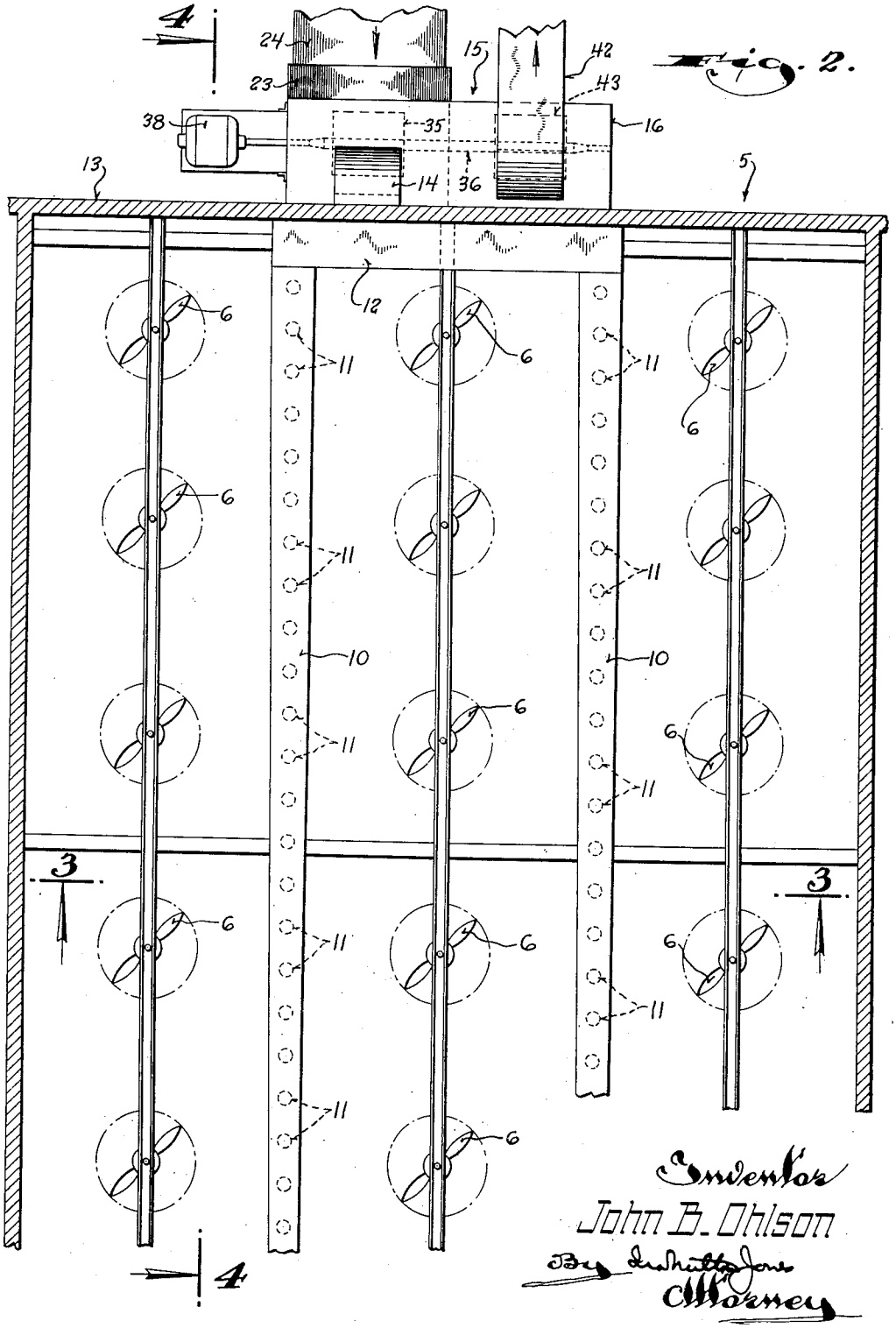

Inventor
John B. Ohlson
By Schuyler Jones
Attorney

Aug. 22, 1939. J. B. OHLSON 2,170,763

DRYING SYSTEM

Filed May 4, 1936 5 Sheets-Sheet 3

Fig. 3.

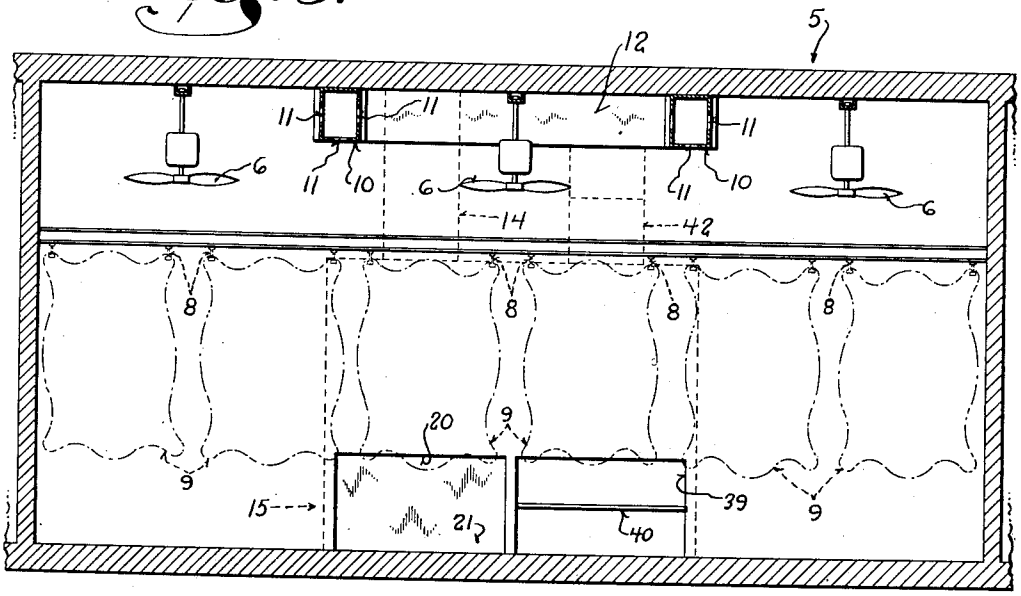

Fig. 4.

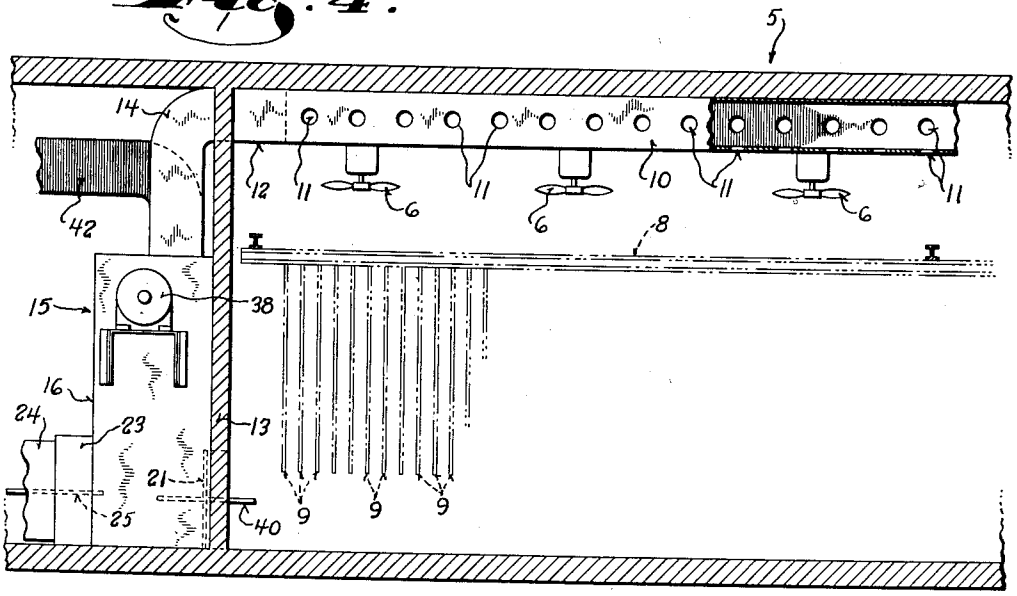

Inventor
John B. Ohlson
By Schuyler & Jones
Attorneys

Aug. 22, 1939. J. B. OHLSON 2,170,763

DRYING SYSTEM

Filed May 4, 1936 5 Sheets-Sheet 4

Fig. 5.

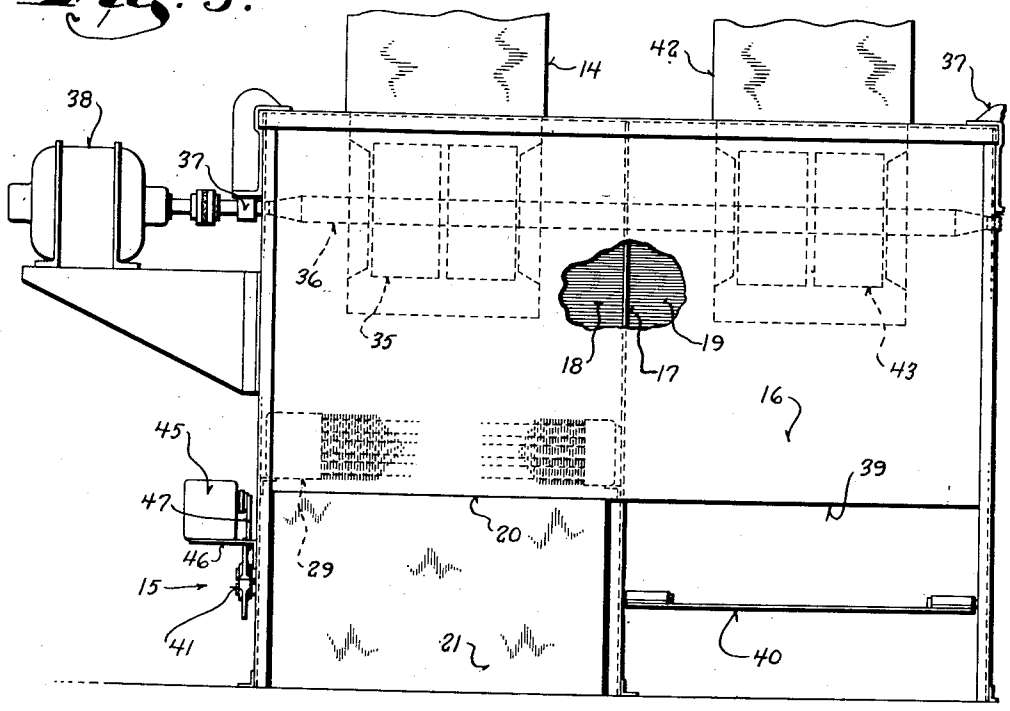

Fig. 6.

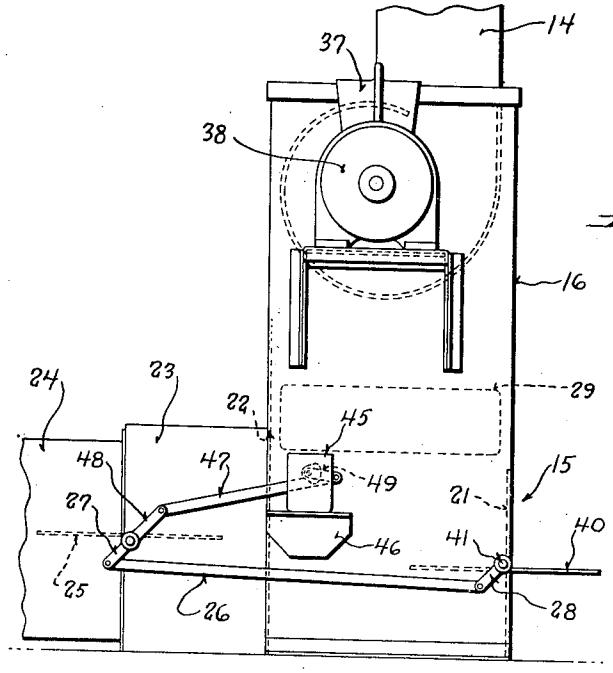

Inventor
John B. Ohlson
By Dudley Jones
Attorney

Aug. 22, 1939. J. B. OHLSON 2,170,763

DRYING SYSTEM

Filed May 4, 1936 5 Sheets-Sheet 5

Fig. 8.

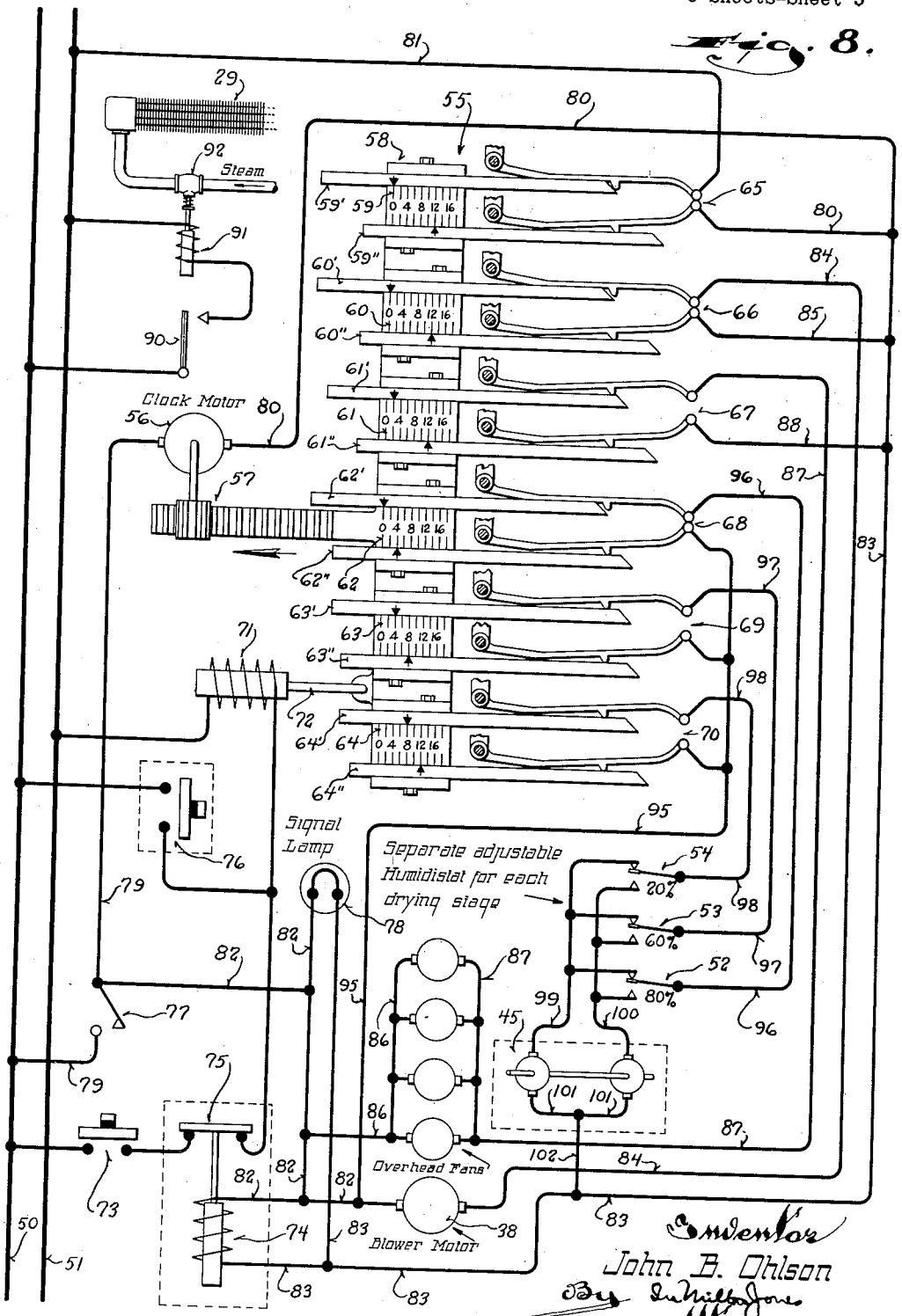

Inventor
John B. Ohlson
By Dewitt Jones
Attorney

Patented Aug. 22, 1939

2,170,763

UNITED STATES PATENT OFFICE

2,170,763

DRYING SYSTEM

John B. Ohlson, Philadelphia, Pa., assignor to Ira Milton Jones, Milwaukee, Wis.

Application May 4, 1936, Serial No. 77,697

4 Claims. (Cl. 34—19)

This invention relates to drying systems in general, and while not restricted thereto, is particularly well adapted to the drying of leather. The drying of other products, such as lumber, textile materials, hair felt, rubber, etc., is also materially improved by this invention, as is also the manufacture of paper.

The road general purpose of the invention is to reduce the drying time and to improve the quality of the product by controlling and maintaining temperature and humidity conditions in the drying chamber radically different than those of previous practice.

Heretofore, it has been the custom to use as much fresh air as possible and to maintain as low a relative humidity as possible within the drying chamber so as to obtain greater absorption and more rapid drying, but this system of drying has been found very objectionable in the drying of the different materials mentioned. This past system of drying is particularly bad in the case of heavy vegetable tanned leathers, as for example, sole leather. By these uncontrolled and more or less haphazard methods of drying heretofore in practice, it was impossible to obtain the desired high quality in heavy vegetable tanned leathers, especially as to flexibility and color.

The rapid surface drying which these past practices entailed caused the heavier leathers to become stiff and brittle and through the chemical reactions occuring during this period of rapid drying, the leather would discolor objectionably.

The present invention overcomes these objections to past drying systems by maintaining predetermined conditions of humidity within the drying chamber throughout the entire drying cycle so that too rapid drying is obviated and uniformly good results are obtainable within the shortest possible time.

Besides this broad general object of the present invention, it has as a further object to provide an electrical system of control by which certain desirable conditions of temperature and humidity may be automatically maintained within the drying chamber.

In this connection, it is another object of this invention to provide a system of remote control which is manually set or adjusted to maintain the conditions desired.

Another object of this invention is to provide an electrical control system for the purpose described by which the drying cycle may be divided into stages during which different conditions are maintained within the drying chamber.

Another object of this invention is to provide a system of control which, after the drying cycle has been started cannot be stopped until its completion, except by those authoritatively in control of the work, so that tampering by unauthorized persons is entirely obviated.

A further object of this invention is to provide a control unit having interconnected dampers and ducts all automatically operated and regulated by an electrical control system for governing the circulation of air into and from the drying chamber and likewise jointly controlling the dry temperature and relative humidity thereof.

With the above and other objects in view which will appear as the description proceeds, this invention resides in the novel construction, combination and arrangement of parts substantially as hereinafter described and more particularly defined by the appended claims, it being understood that such changes in the precise embodiment of the hereindisclosed invention may be made as come within the scope of the claims.

The accompanying drawings illustrate one complete example of the physical embodiment of the invention constructed according to the best mode so far devised for the practical application of the principles thereof, and in which:

Figure 1 illustrates graphically the conditions within the drying chamber throughout a representative drying cycle;

Figure 2 is a plan view of a drying chamber constructed in accordance with this invention;

Figure 3 is a cross section view through the drying chamber taken on the plane of the line 3—3 of Figure 2;

Figure 4 is a vertical longitudinal section view of the drying chamber taken on the plane of the line 4—4 of Figure 2;

Figure 5 is a front view of the air conditioning unit by which the air entering the drying chamber is modified to maintain the desired conditions;

Figure 6 is an end view of said air conditioning unit;

Figure 7 is a perspective view of the dampers in the conditioning unit showing their relative positions; and

Figure 8 is a diagrammatic illustration of the electrical control system.

Referring now particularly to the accompanying drawings, attention is first directed to Figure 1. This view illustrates graphically the humidity

conditions maintained within the drying chamber throughout a drying cycle of twelve hours. As stated hereinbefore, this invention seeks to prevent destructive sudden drying of the material by controlling the relative humidity within the drying chamber throughout the drying cycle. To this end, the drying cycle is divided into three stages, all of such relative duration as is found most suitable for the particular material being dried.

For purposes of illustration, the drying cycle has been set at twelve hours and the three stages are of equal duration, each four hours. During the first stage of the drying cycle, the relative humidity within the drying chamber is maintained at approximately eighty per cent. During the second stage of the cycle, the relative humidity is maintained at approximately sixty per cent, and during the last stage, the relative humidity is set at twenty per cent.

Hence, it may be seen that by maintaining these conditions of relative humidity within the drying chamber, leather or other material being dried will dry slowly during the initial stage so as to preclude the possibility of rapid surface drying and the resulting objectionable effects caused thereby.

Where the material being dried enters the drying chamber in a substantially saturated state, as does leather, the water content of the material itself provides the humidity source. With other materials, it may be necessary to introduce moisture into the drying chamber.

The specific construction of the drying chamber may be varied to suit different installation conditions, and in the drawings (Figures 2, 3 and 4) a typical arrangement is illustrated. As here shown, the drying chamber, which is indicated generally by the numeral **5**, is a completely enclosed room or compartment, (only one end portion of which is shown), provided with a plurality of overhead fans **6**. In the present instance, the fans are stationary and supported from the ceiling. Suspended beneath the fans are racks **8**, shown in dotted lines in Figures 3 and 4, from which the leather or skins **9** may be hung, if this is the material being dried.

Extending longitudinally along the ceiling of the drying chamber between the rows of fans **6** are two distributing ducts **10** provided with outlet openings **11** in their side and bottom walls. At one end, the two distributing ducts **10** connect with a header **12** mounted on the adjacent end wall **13** of the drying chamber and connected through a duct **14** with a conditioning unit, indicated generally by the numeral **15**.

The conditioning unit **15**, as best illustrated in Figures 5 and 6, comprises an outer substantially rectangular casing **16** provided with a vertical central partition **17** which divides the casing into two chambers or compartments **18** and **19**.

The chamber or compartment **18** is the air supply chamber with which the duct **14** connects to carry the air from the chamber or compartment **18** into the distributing ducts **10** so that the air introduced into the drying chamber emanates from the chamber or compartment **18** which may be regarded as a mixing chamber in which the air to be introduced into the drying chamber is conditioned so that the desired results may be obtained.

The chamber or compartment **18** is also communicated with the drying chamber through a recirculation port **20** controlled by a damper **21** which when open allows air to be drawn into the chamber or compartment **18** from the drying chamber for recirculation. Opposite the recirculation port **20**, the chamber **18** is communicated through an inlet port **22** with a fresh air chamber **23** formed by a casing attached to the rear wall of the main casing **16**. Fresh air is conducted to the chamber **23** through a duct **24** leading from any suitable source, preferably the outside atmosphere.

At the point of attachment of the duct **24** with the chamber **23**, an air inlet damper **25** is provided to regulate the introduction of fresh air into the chamber **23**. As will be hereinafter more fully described, the air inlet damper **25** and the recirculation damper **21** are interconnected by a link **26** attached at its opposite ends to levers **27** and **28** fixed to the shafts of the dampers **25** and **21**, respectively. Through this interconnection, the dampers **25** and **21** move simultaneously in opposite directions so that when one is open, the other is closed (see Figure 7).

Above the inlet port **22** and the recirculation port **21**, the chamber **18** contains a heat exchanger **29** of any suitable construction but preferably in the form of a steam or hot water radiator of the finned type to which a suitable heating medium is supplied in any desired manner. Inasmuch as the heat exchanger **29** is disposed above the inlet port **22** and the recirculation port **21**, it follows that all the air passing upwardly through the chamber **18** and coming from the fresh air supply or the recirculation port must pass through the heat exchanger. The air entering the drying chamber is thus heated.

The control of the temperature is effected by turning on and shutting off the heating medium supply, in a manner to be hereinafter described.

Above the heat exchanger **29**, the chamber **18** contains a blower **35** of the centrifugal type which induces a flow of air upwardly through the chamber or compartment **18** and into the distributing ducts leading to the drying chamber. The blower **35** is mounted on a shaft **36** which extends throughout the length of the casing **16** and is journalled at its opposite ends in bearings **37**. A motor **38** is provided to drive the blower shaft **36**, as is shown in Figures 5 and 6.

The chamber or compartment **19** on the opposite side of the partition **17** is the exhaust chamber. It is communicated with the interior of the drying chamber through an exhaust port **39** controlled by an exhaust damper **40**. The damper **40** is fastened to the same shaft **41** which mounts the recirculation damper, but, as best shown in Figure 7, is disposed at right angles to the recirculation damper so that when the recirculation damper is closed, the exhaust damper will be open.

Also, by reason of the fact that the recirculation damper and inlet damper are interconnected to act simultaneously in opposite directions, it follows that when the exhaust damper is fully open, the fresh air inlet damper will also be open so that the same volume of air is introduced into the drying chamber as is exhausted therefrom.

At its upper end, the exhaust chamber **19** has an exhaust duct **42** connected thereto through which the air exhausted from the drying chamber and drawn into the exhaust chamber **19** by a blower **43**, similar to the blower **35** and mounted on the shaft **36**, is carried away to a suitable point of discharge.

As noted hereinbefore the three dampers are

interconnected by linkage so that all move in unison. Motion is imparted to the connected dampers by means of a motor unit 45. The motor unit 45 is mounted at one end of the conditioning unit by means of a suitable bracket 46 and is connected with the dampers by a link 47 having one end connected to a lever 48 fixed to the shaft of the damper 25 and its other end connected to a link 49 fixed to the shaft of the motor unit.

The motor unit may be of any suitable design and is so arranged that operation thereof in one direction moves the dampers to one position and operation thereof in the opposite direction effects opposite adjustment of the dampers. The usual limit switches are incorporated in the motor unit to arrest the operation thereof when the dampers reach their limits of adjustment.

The purpose of adjusting the dampers is to maintain predetermined humidity conditions within the drying chamber. The manner in which this is accomplished will now be described.

Referring particularly to Figure 8 which illustrates diagrammatically the entire control system, the numerals 50 and 51 designate the two power supply lines. The motor unit 45, which in the present instance is illustrated as having two motors each operable in one direction, is connectable with the power lines to effect adjustment of the dampers at the dictation of three separate humidostats 52, 53, and 54 all located within the drying chamber, but each separately rendered operative by a clock unit indicated generally by the numeral 55.

The clock unit 55 is the means by which the total duration of the drying cycle and that of the individual stages is determined. This unit incorporates a drive motor 56 having a geared connection 57 with a cam carrier 58. The cam carrier 58 is arranged to have a predetermined motion imparted thereto by the motor 56 so as to open and close switches to be hereinafter described, at predetermined intervals. The exact construction of the clock unit forms no part of this invention and the construction shown is employed merely for purpose of illustration.

In the construction shown the carrier 58 is a rigid unit moved along a definite path through a predetermined distance by the motor 56. Inscribed on or otherwise affixed to the carrier 58 are six scales 59, 60, 61, 62, 63 and 64. These scales are spaced apart as shown and are graduated to represent hours. Adjustably mounted on opposite sides of each scale are switch control cams. The cams associated with the scale 59 are designated 59′ and 59″; those for the scale 60 are designated 60′ and 60″; those for the scale 61 are designated 61′ and 61″; those for the scale 62 are designated 62′ and 62″; those for the scale 63 are designated 63′ and 63″; and those for the scale 64 are designated 64′ and 64″.

Arrows on the cams cooperate with the delineations of the scales to enable the adjustment of the cams so as to actuate the switches they control to either open or close a circuit at predetermined times depending upon the adjustment of the cams. The cams associated with the scale 59 control a switch 65; those associated with the scale 60 control a switch 66; and those associated with the remaining scales 61 to 64, inclusive, respectively, control switches 67 to 70, inclusive.

Each switch has two pivoted arms provided with cam followers engaged by and riding on the top of the cams, as shown. When the cam follower of an upper switch arm rests on its respective cam, the switch, of which that particular switch arm forms a part, is open; whereas engagement of the cam follower of the lower switch arm with its respective cam holds the associated switch closed. Inasmuch as the cams move away from the cam followers in operation it is thus possible to predetermine the closure of the switches by adjustment of the upper cams and to predetermine the opening of the switches by adjustment of the lower cams.

To illustrate, the cam 59′ is adjusted to zero on the scale representing the start of the drying cycle and the cam 59″ is adjusted to 12 on the scale which represents a point of time twelve hours later. The switch 65 which is controlled by the cams 59′ and 59″ thus is closed at the start of the drying cycle and remains closed for twelve hours. Similarly the other switches may be closed and opened at different times.

After the completion of a cycle the cam carrier 58 may be reset to its initial position by energizing an electromagnet 71, the armature of which is connected by a link 72 with the carrier 58. Normally the resetting is controlled by the closing of the push button switch 73 which is accessible to the regular operator of the unit. Closing of this switch 73 momentarily energizes the solenoid 71 and also energizes the magnet 74 of an electromagnetic switch 75, to open the same. The switch 75, is connected in series with the switch 73 so that upon opening thereof the switch 73 is rendered ineffective for subsequent energizing of the solenoid 71 until such time as the switch 75 is again closed, and inasmuch as the magnet 74 has a maintaining circuit controlled by the switch 65 it follows that magnet 74 will remain energized until the completion of the time period for which this switch 65 is closed.

Resetting of the mechanism also may be effected by closure of a switch 76 which is in parallel with the switch 73. The switch 76, however, is enclosed within a cabinet indicated by dotted lines in Figure 8 so that access thereto is restricted to those authorized to make adjustments to the system. It is thus not ordinarily used and is employed only in setting the system. Through it, the system may be reset at any time, but as stated, the regular operators of the drying room do not have access to this switch and consequently, they cannot, once the cycle has started, interrupt the proper functioning thereof.

A main manually operable switch 77 is provided for the entire system. When this switch is closed, an indicator lamp 78 is lighted.

Operation

With the parts in their positions shown in Figure 8, the system is at the starting point of a drying cycle. Upon closure of the main switch 77 the clock motor 56 is immediately set in operation. The circuit therefore may be traced from line 50 through conductor 79 in which the switch 77 is interposed to one side of the motor. From the other side of the motor, the circuit is continued through conductor 80 which leads to one side of the switch 65. Inasmuch as this switch 65 is closed, the circuit is continued through conductor 81 to the line 51.

Simultaneously with the starting of the motor 56, the lamp 78 is lighted and the magnet 74 energized. The circuit for the lamp and the magnet 74 is as follows: From switch 77 conductor 82 leads to one side of the lamp and one side of the electromagnet 74. The other terminals of the

lamp and the electromagnet 74 are connected to a conductor 83 which leads to the conductor 80 and consequently the switch 65 and in this way out to the line 51.

At the very initiation of the drying cycle, the blower motor 38 is also set in operation. The operation of this motor is controlled by the switch 66 on the clock unit and inasmuch as it is desirable to have air circulation throughout the entire drying cycle, the setting of the cams 60' and 60'' which control the switch 66 is the same as that of the cams 59' and 59''. The circuit for blower motor starting with line 50 is through closed switch 77, conductor 82 to one side of the motor, from the other side of the motor through conductor 84 to one side of switch 66, through the switch and conductor 85 which connects with conductor 83 out through switch 65 to line 51.

At the start of the drying cycle, especially in drying leather, it is undesirable to have high turbulence. Consequently for a predetermined interval the overhead fans are not turned on. The motors for the overhead fans are controlled by the switch 67 and assuming that it is desirable to have turbulence start at the end of the second hour, the cam 61' which controls the closure of switch 67 is set with its arrow opposite the two hour designation on the scale 61. Consequently, when the cam carrier 58 has descended the distance corresponding to a period of two hours the switch 67 is closed and the overhead fan motors started. The circuit for these motors, beginning with line 50 is through switch 77, conductors 82 and 86 to one side of the fan motors and from the other sides thereof through conductor 87 to one side of switch 67. From the opposite side of switch 67 the circuit is continued through conductor 88 which connects with conductor 83 so as to be completed through switch 65 back to line 51.

From the description thus far it is evident that the switch 65 controls the total length of the drying cycle, for in each instance the closure of this switch is necessary to maintain the circuit in question. It is also evident that the blower motor 38 and the motors for the overhead fans may be started at any time within the duration of the drying cycle and kept in operation until the end of the cycle or stopped before the end of the cycle.

Temperature

Throughout the entire drying cycle the temperature within the drying chamber may be maintained at any predetermined degree by controlling the supply of the heating medium to the heat exchanger 29. While any desired manner of effecting this control may be employed, for the purpose of illustration, a thermostat 90 is mounted within the drying chamber to control the energization of a magnet 91 by which a valve 92 in a supply line leading to the heat exchanger is opened and closed. In this manner the temperature within the drying chamber may be maintained constant.

Relative humidity

The relative humidity within the drying chamber is altered in stages or steps. The entire cycle is divided into three definite stages. During the first stage, the relative humidity is maintained at eighty per cent and is controlled by the humidostat 52. During the second stage, it is maintained at sixty per cent under the control of the humidostat 53. While during the last stage, the relative humidity is kept comparatively low, as for instance twenty per cent, at the dictation of the humidostat 54.

Each of these three humidostats 52, 53, and 54 controls the operation of the motor unit 45 to effect recirculation or take in fresh air. When the motor unit is under the control of one humidostat the other two are disconnected so that there will be no conflict in the control of the motor unit during the three separate stages. This is the function of the switches 68, 69, and 70. The switch 68 when closed renders the humidostat 52 operative to control the functioning of the motor unit 45. The switch 69 connects the humidostat 53 operatively with the motor unit, while the switch 70 controls operativeness of the humidostat 54.

Inasmuch as the three stages of the drying cycle are of equal duration in this instance, the cams 62' and 62'' controlling the switch 68 are set so that the switch 68 will remain closed for the first four hours of operation; the cams 63' and 63'' controlling the switch 69 are set so as to close the switch 69 at the end of four hours and open the same at the end of the eighth hour; while the cams 64' and 64'' controlling the switch 70 are adjusted to close their switch at the end of the second stage and maintain it closed until the end of the cycle.

The humidostats are preferably of the hair element type and each has a contactor which swings between stationary contacts and when engaged with one of its stationary contacts causes operation of the motor unit in one direction by connecting one of its two motors across the line, and when engaged with the other of its stationary contacts effects opposite operation of the motor unit by connecting the other one of its two motors across the line.

The circuit for the two motors of the unit 45 may be traced as follows: Beginning with line 50 through closed switch 77, conductor 82 to conductor 95 which leads to one side of each of the three switches 68, 69, and 70, the circuit is continued through whichever of these three switches is closed to either conductor 96, 97, or 98 which lead respectively to the contactors of the humidostats 52, 53, and 54. Inasmuch as the switch 68 is the only one closed, the circuit can only be continued through conductor 96 to the contactor of humidostat 52. As this contactor is engaged with one of its two cooperating stationary contacts the circuit is continued from such engaged contact to either conductor 99 or 100 one of which leads to one motor and the other to the other motor of the unit. The opposite sides of both motors are connected through conductors 101 and 102 to conductor 83 which is connected through conductor 80 with switch 65 so that the circuit is completed through conductor 81 to the other line 51.

As will be readily apparent, as the contactor of the humidostat 52 swings from one of its stationary contacts to the other, either of the two motors of the unit 45 will be caused to run until the limit switches (not shown) open the circuit, to either increase or decrease the relative humidity by either recirculating or injecting fresh air; and inasmuch as the humidostat 52 is set to maintain an eighty per cent relative humidity the proper adjustment of the dampers will be effected at the dictation of the humidostat 52 so as to maintain as nearly as possible the desired condition.

At the end of the first stage when the switch 68 opens and the switch 69 closes, the second

humidostat 53 takes up the control of the motor unit 45 and as it is adjusted to maintain a sixty per cent relative humidity the motor unit will be immediately caused to adjust the dampers to take in fresh air until the relative humidity is brought to the desired level. Similarly when the switch 69 opens and switch 70 closes at the start of the last cycle the humidostat 53 is taken out of the circuit and the humidostat 54 rendered operative to take up the control of the motor unit 45.

At the completion of the entire drying cycle the switch 65 opens and the entire system is rendered inoperative. It remains so even though the main switch 77 is closed until the mechanism is reset which is generally done by the push button 73.

From the foregoing description taken in connection with the accompanying drawings, it will be readily apparent to those skilled in the art to which this invention appertains, that a substantial improvement has been effected thereby in the drying of materials and that by maintaining certain definite temperature and humidity conditions throughout the entire drying cycle the quality of the product is materially improved and the time required for the complete drying cycle is materially reduced.

What I claim as my invention is:

1. In a drying apparatus of the character described, the combination of a drying chamber to receive the material to be dried, a blower for inducing a positive circulation of air into and out of the chamber, means connecting the intake of the blower with the outside atmosphere and with the chamber so that fresh outside air and air from the chamber may be conducted to the blower, dampers for controlling the passage of air through said means whereby the air entering the chamber is controlled to be either fresh air from outside the chamber or recirculated air from inside the chamber, means for adjusting the dampers, a plurality of humidostats within the chamber, each separately operable to govern the adjusting means for the dampers so as to maintain a relative humidity in accordance with the setting of the humidostat, and manually adjustable power driven means for automatically determining the sequence and duration of time for which the different humidostats are operable to govern the functioning of the damper adjusting means.

2. In a drying apparatus, the combination of a drying chamber, means for inducing a positive circulation of air into and out of the chamber including a blower and means for conducting fresh outside air and air from the chamber to the intake of the blower, dampers for controlling the passage of air through said conducting means whereby the air passing to the blower and entering the chamber is controlled to be either fresh air from outside the chamber or recirculated air from within the chamber, electrical means for adjusting the dampers, a plurality of individually adjustable humidostats within the chamber, each separately adapted to govern the functioning of the damper adjusting means, an electric switch for controlling the operation of the blower motor, switches for operatively connecting the humidostats with the damper adjusting means, and manually adjustable power driven means for opening and closing said switches at predetermined times whereby the duration of time the blower is operative and the sequence and length of the intervals the different humidostats are operable to govern the damper adjusting means is automatically determined.

3. In a control for drying systems including dampers to be opened and closed to maintain predetermined conditions of relative humidity within a drying chamber, electrically driven means for adjusting the positions of the dampers, a plurality of independent humidostats disposed within the chamber and each separately adjustable and operable to govern the functioning of the damper adjusting means, electric switches through which the individual humidostats are operatively connected with the damper adjusting means, and means for controlling said switches comprising an element movable at a predetermined rate of speed, and means controlled by said element for opening and closing the switches as said element moves through its range of travel, said last named means being adjustable with respect to the element and its range of travel so that the sequence and duration of closure of said switches is automatically controlled in accordance with the manual adjustment of said last named means.

4. An air conditioning unit for use in connection with drying systems and comprising, an upright substantially oblong casing having a vertical partition wall dividing it into two separated compartments, both of said compartments having outlet openings near the top, a blower within each of said compartments, means for driving said blowers, one of said compartments having a single inlet port near its bottom, the other compartment having two inlet ports near its bottom, a damper for each of said inlet ports, means for interconnecting said dampers so that the damper for the first mentioned inlet port operates simultaneously with but directly opposite to one of the other two dampers and in unison with the other of said two dampers, means for adjusting the dampers, and a heat exchanger disposed transversely across the compartment having the two inlet ports and between the inlet ports and the blower operating in said compartment.

JOHN B. OHLSON.