United States Patent [19]

Wellman

[11] **3,882,999**

[45] **May 13, 1975**

[54] **OPENER/RE-CLOSER FOR SEALED CONTAINERS**

[76] Inventor: **Lester R. Wellman,** 110 Lakerwood Pl., Highland Park, Ill. 60035

[22] Filed: **Oct. 29, 1973**

[21] Appl. No.: **410,376**

Related U.S. Application Data

[63] Continuation of Ser. No. 233,037, March 9, 1972, abandoned.

[52] **U.S. Cl.** ..... **206/216;** 206/498; 222/81; 229/51 CE; 229/66

[51] **Int. Cl.** **B67b 7/24**

[58] **Field of Search** ..... 222/81, 83, 83.5, 87, 88, 222/541; 229/51 CE, 51 C, 85, 66; 206/216, 498

[56] **References Cited**

UNITED STATES PATENTS

2,893,392	7/1959	Wagner et al.	206/229 X
2,992,118	7/1961	Daline	229/85 UX
3,088,654	5/1963	Perino et al.	229/51 CE X
3,187,983	6/1965	Mendoza	229/51 CE
3,439,867	4/1969	Paxton	229/62

Primary Examiner—Robert B. Reeves
Assistant Examiner—Francis J. Bartuska
Attorney, Agent, or Firm—Dawson, Tilton, Fallon & Lungmus

[57] **ABSTRACT**

A device placed inside a flexible container prior to sealing which is a means of perforating the wall to allow dispensing the contents. A part of the device is a reclosing clip when drawn through the opening. The action results in holding folds or twists made in the container after part of the contents have been dispensed. In containers intended to be fully erupted no re-closure feature need by provided.

7 Claims, 9 Drawing Figures

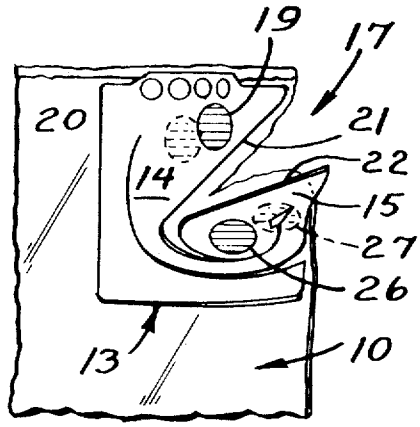

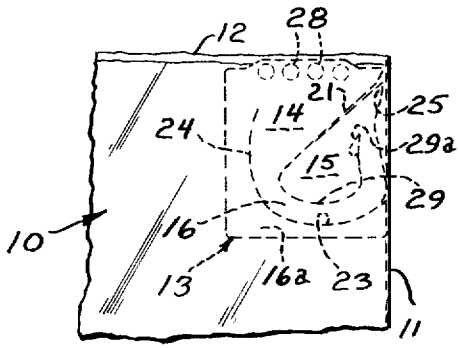

Fig. 1

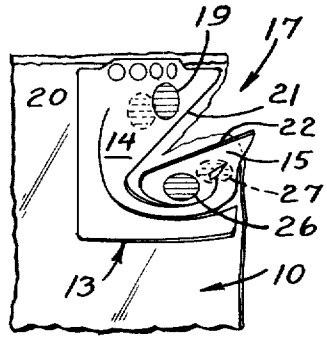

Fig. 2

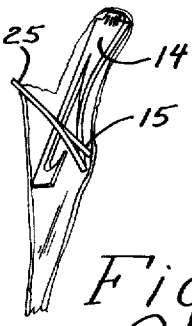

Fig. 3

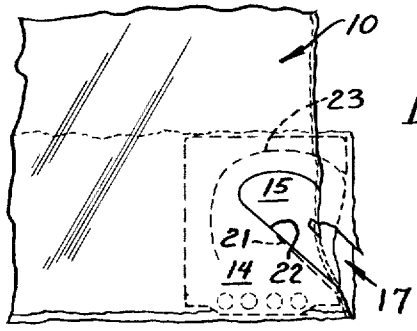

Fig. 4

Fig. 5

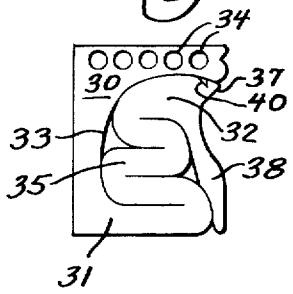

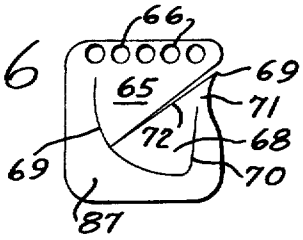

Fig. 6

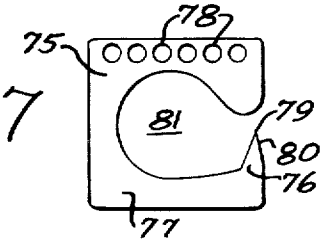

Fig. 7

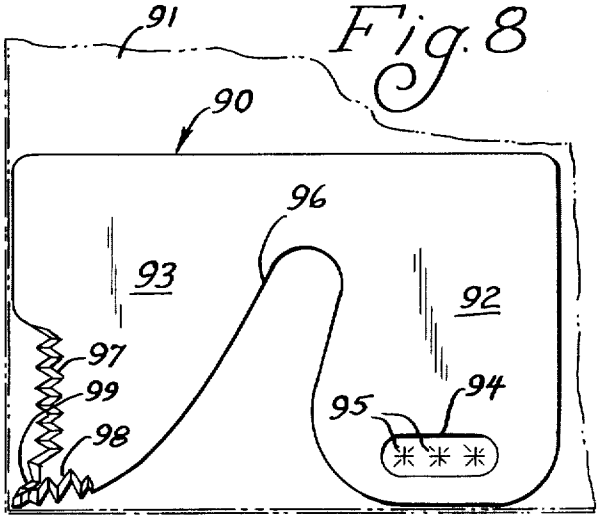

Fig. 8

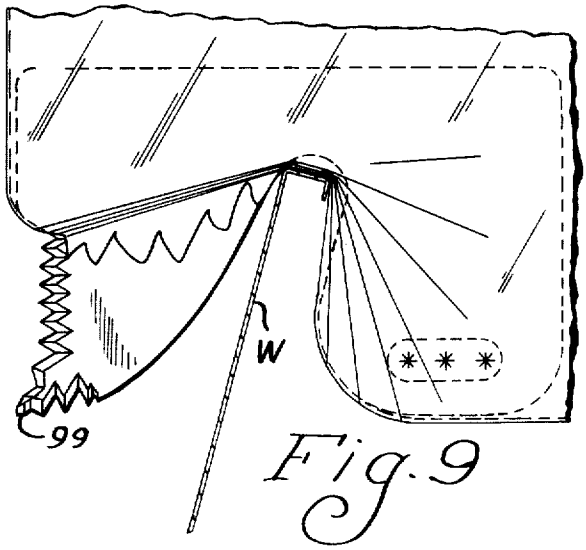

Fig. 9

OPENER/RE-CLOSER FOR SEALED CONTAINERS

RELATED APPLICATION

This is a continuation application of co-pending application Ser. No. 233,037, filed Mar. 9, 1972 now abandoned.

BACKGROUND AND SUMMARY

The present invention relates to a sealed container provided with an internal tool for selectively opening the container through hand manipulation. Normally, a container of the type with which the present invention is concerned is used to store flowable goods which is intended to be a broad term, including liquids, pastes, gases, particulate matter, small lumps, flakes or any combination of these. It may also be used for bread or other packaged bakery goods. The principal characteristics of the goods intended for use with the present invention is dispensing from a container by pouring or forcing the goods through an aperture formed in the container, and if required re-closing.

Many containers are, of course, well know for storing and dispensing of flowable goods, such as the conventional milk carton, the cylindrical container with a metallic spout for table salt, and so on. However, most such containers wherein the container material is flexible plastic or thin metal foil or paper covered foil normally required some additional implement, such as a pair of scissors or a knife in order to open them. Further, once opened, this type of container is normally not well suited for resealing and further storage of the remaining contents of the container.

The present invention includes a container for flowable goods which includes a sealed, flexible bag which is preferably made of a thermoplastic material. A device is provided within the bag, and it is preferably secured to the bag by means of perforations through which the bag sides may be heat sealed to position and hold the device. Equivalent means may be used for securing the device inside the bag.

The device may consist of a single piece of thin but fairly rigid material, such as polypropylene, polystyrene, ABS, PVC or metal which is compatible with the contents of the bag. In one concept the device is die cut or otherwise formed into two hand-separatable portions which normally lie adjacent each other and are co-planar when the device is in its normal pre-use position. One of the portions of the tool serves as a reaction base, and the other portion is rotatable relative to the base and out of the plane of the base to form a slit in the bag.

The device serves to define a tear line in the bag. The bag material is firmly held against the flat sides of the device by both hands, thereby preventing a person's exerting pressure on the bag during opening. When the separatable portions of the device are moved apart, the bag's material is sheared along the predetermined tear line defined by the device.

The slit may be along a side fold line of the bag. After a suitable aperture is formed in the side of the bag, the tool is released, and it resumes its pre-use position with only minimal obstruction to the flow of the contents of the bag through the aperture.

The bag may be re-closed by folding the top of the bag over on itself, exposing the severing portion of the tool through the aperture formed and them clipping it over to hold the folded portions of the bag together.

Thus, with the present invention, a convenient, economical container is provided for flowable goods wherein the container is provided with a tool or deivce for forming a dispensing aperture in the container and which serves to re-close the container if desired. The container with the device is self-container to obviate the need for additional cutting or severing implements, and it need not contain any particular lines of weakness, thereby making a stronger bag in manufacture, transporting, storage, cooking or freezing, or the like. Further, the manner in which the bag is opened does not require an inadvertent increase in the internal pressure or contents of the bag, as has sometimes been required in prior plastic or foil bags in order to open them.

The bag may be printed or marked externally, if it is not transparent, to direct a user in the proper method of opening the bag, and the container may be manufactured economically as the internal flat or generally flat device will not interfere with the handling of the bag material in web form, as is commonly encountered in manufacturing or printing operations.

The device also minimizes accidental opening. Mounting while stabilizing position is completely flexible and will move with any intrusive force (contrary to use of two hands or an opposing surface in the case of oil bag).

Other features and advantages of the present invention will be apparent to persons skilled in the art from the following detailed description of a number of preferred embodiments, accompanied by the attached drawing.

THE DRAWING

FIG. **1** is a fragmentary view of a container constructed according to the present invention with an internally located tool in its normal pre-use position;

FIG. **2** is a view similar to FIG. **1** illustrating the use of the tool in forming an opening in the bag;

FIG. **3** is a side view of the device in operation as in FIG. **2**;

FIG. **4** shows the combination of FIG. **1** after dispensing a portion of the contents of the container with the internal tool re-closing the aperture;

FIGS. **5** and **9** show alternative embodiments for the opening/re-closing the internal device;

FIG. **7** shows a device according to the present invention without the re-closing structure; and

FIGS. **8–9** illustrate a device for opening a heavier bag and it also does not have a re-closure feature.

DETAILED DESCRIPTION

Referring first to the embodiment of FIGS. **1–4**, a flexible bag is generally designated by reference numeral **10**. The bag **10** may be formed of any number of suitable materials including a wide range of plastics known to the art as well as metal foils, paper-covered foils, cloth, paperlaminates and a number of other known packaging materials. The bag **10** is, however, preferably of the broad class of thermoplastics.

The bag **10** may be formed from a continuous web of material, folded at its sides (one such fold line being designated **11**) and transversely heat-sealed at top and bottom (the upper heat seal being designated **12**). For the embodiment being discussed, it is preferred that the material of the bag **10** be thermoplastic for reasons presently to be discussed.

A device generally designated by reference numeral **13** is located in the upper corner of the bag **10** at a location at which it is desired to form a dispensing aperture or slit. The device **13** is formed from a single thin sheet of relatively rigid or stiff material, such as polypropylene which has compatibility similar to the polyolefin material of the bag with relation to the anticipated contents. Alternatively, the tool **13** may be formed of sheet metal, depending on the material of the bag and the contents of the package.

The device **13** may be formed into the desired shape by diecutting. It can be seen to include a first section **14** and a second section **15** which are joined together by a generally C-shaped hinge member **16.** The members **14** and **16** are co-planar in the pre-use or storage position, but they are movable relative to one another as shown in FIGS. **2, 3** to sever the bag **10** and provide an opening as at **17.** A third peripheral portion **16***a* serves as an extension of the portion **14** around the hinge **16.**

The portion **14** of the tool **13** provides a reaction base so that the thumb and forefinger of the left hand of a person may be placed approximately in the positions shown respectively at **19** and **20** in FIG. **2.** These finger positions are generally aligned with a straight edge **21** which partially defines the member **14** and abuts a similar straight edge **22** on the severing portion **15** of the tool **13.** These adjacent straight edges define a predetermined tear line for the bag material along with the dispensing aperture will be formed. As seen in FIG. **1,** in the pre-use position, the edges **21** and **22** are adjacent each other.

The portion **15** is also partially defined by a curved cut shown by the dashed line **23** in FIG. **1,** and this cut extends leftwardly beneath the cutting portion **15** and thence upwardly as at **24** to partially define the reaction base **14** and to separate it from the hinge **16,** although most of the twisting force is encountered in the lower, horizontal portion of the hinge **16,** as illustrated in FIG. **2.**

Again referring to FIG. **1,** the upper right-hand corner of the tearing portion **15** is provided with a point designated **25** to facilitate initial severing or puncturing of the bag material **10.** In use, the thumb and forefinger of the right hand are preferably located approximately at the positions indicated by the pressure areas **26** and **27** in FIG. **2** respectively. Thus, when the two movable portions of the tool are forced angularly out of plane, three ends are rotated about hinge, and there is a slight rotation of a reaction base **14** with the bottom part moving out of the plane of the page and top right-hand part moving into the plane of the page, and the corresponding twisting motion on the cutting portion **15** moves the upper part of that portion out of the plane of the page and the lower part into the plane of the page as illustrated in FIG. **3.**

The upper peripheral part of the tool **13** is provided with a flange **27** which is apertured as at **28.** The flange **27** may be feathered, and it is located between the folded portions of the bag **10** adjacent the part that is to be heat sealed, so that when the bag is heat sealed, the plastic will flow into the apertures **28** and weld to thereby hold the device **13** in place with ancillary spot welds or heat sealed dots centered in the perforations serving to loosely hold the device in the desired position. Thus, the tool **13** is located within the bag **10** and it is formed as an integral part of the bag in a preferred embodiment.

The materials of the bag and the device **13** must be selected so as to be compatible with the contents of the bag as well as with each other. The configuration and strength of the device will depend upon the material, thickness and the bag's resistance to tearing. Further, if the bag material is not transparent, it may be selected such that it is capable of being printed on so as to locate the juncture between the two relatively movable portions of the device. The additional two or more spot welds will call attention to the location of the opening device. These spots are preferably kept as close to and in line with, or parallel, the closure weld so that they do not take the full BRUNT or FORCE of the fluid's tendency to assume a spheroid shape. The holding portion of the device should be as thin and narrow as possible. If it is not desired to form the tear at a corner of the bag, the tool may be located at another position, depending upon the contemplated usage.

After the bag has been opened with the device **13,** and as much of the contents poured or forced outwardly as is desired, the top of the bag may be transversely folded twice to the position shown in FIG. **4** (wherein it will be observed that the storage portion of the bag extends upwardly) and the cutting portion **15** may be rotated outwardly of the aperture **17** formed in the side of the bag and placed over the fold, as seen in FIG. **4** to re-close the container. That is to say, the resiliency of the cutting member holds the second fold of the bag material between the two straight edges **21, 22** and acts as a clamp to re-close the aperture **17.** The bag material is also passed beneath the cutting member **15** through the slot **29.** Thus, the member **15** performs a dual function—namely, it both acts as a device to sever the bag and as a clip for holding the folds in place after the bag is folded. Holding of the bag in the folded position is facilitated by means of a diamond-shaped aperture, **29***a*, located at the termination of the cut line **29** which partially defines the lower portion of the tearing member **15.** This aperture and its shape further serve to function as a tearresistant termination to the cut line **29** when the device is twisted in operation or in reclosing.

The device **13** may alternatively be used to close a bag, particularly one which stores a fluid such as milk by using the device to twist the upper corner of the bag a number of times, then withdrawing the tearing member **15** and wrapping it around the twisted portion of the bag. This has been found to produce a re-closure which is much more resistant to the leaking or spilling of liquid contents within a bag.

Turning now to the embodiment of FIG. **5,** there is shown a tool which includes an upper reaction base **30,** a lower hinge area **31,** and a cutting member **32,** again all formed from a single sheet of material. A curved diecut line **33** separates the cutting member **32** from the reaction base **30,** and it also defines the hinge area **31.** The reaction base **30** is apertured as at **34,** and these apertures perform a function similar to the apertures **28,** already discussed.

In the embodiment of FIG. **5,** the hinge area **31** is connected to the cutting member **32** by means of a serpentine connector member **35,** and this permits even further separation between the cutting member **32** and the reaction base **30** without undue stress on the hinge member **31.** The cutting member **32** includes a sharp

point at its upper right-hand corner, designated **37**, and a relatively elongated depending portion **38**. The point **37** may be used for puncturing the bag material. A notch is formed at **40** adjacent the puncturing point **37** on the cutting member **32**, so that a person can pull the cutting member **32** out from the bag after it has been punctured and twice folded when it is desired to use the cutting member as a clip. In this embodiment, the primary clipping region is between the serpentine connector member **35** and the curved diecut line **33**.

The embodiment of FIG. **6** is designed primarily for materials which resist an even cutting, such as polyurethane, and it is preferably made of a thin metal sheet material. In this embodiment, the reaction base is designated **65**, and it is apertured as at **66**. A hinge member **67** connects the reaction base **65** with a cutting member **68**. In this embodiment, the reaction base and the cutting member again are each partially defined by straight edges which are adjacent each other, and a curved die-cut line **69** partially defines the hinge member **67**. However, the die-cut line is extended upwardly as at **70** so that a second or auxiliary hinging action is obtained in the area 71. The cutting member **68** is provided with a puncture point **69**, and the primary tearing surfaces are adjacent and to either side of the puncture point **29**, but extending further down the straight edge **72**.

Re-closing is accomplished in this embodiment by again taking the cutting member **68** out through the aperture formed and slipping it over a folded bag, the bag then extending beneath the cutting member **68** and above the reaction base **65** and hinge **67**—that is, through the curved die-cut line **69** and between the adjacent straight edges of the reaction base **65** and cutting member **68**.

The embodiment of FIG. **7** is intended primarily as a puncture device, reference numeral **75**, referring to a reaction base which is connected to a cutting member **76** by means of a hinge area **77**. The reaction base is again apertured as at **78**, and the cutting member is provided with a sharp point **79**, the adjacent sides of which form a cutting line **80**. In this embodiment, there is a relatively large void **81**.

Turning now to FIGS. **8** and **9**, there is an embodiment which is designed for a thicker bag or a bag which is made out of a material more resistant to tearing, and this embodiment is intended to cooperate with the side wall of a container or location into which the material is dispensed. It is particularly adapted for and suited for use in dispensing motor oil.

In this embodiment, the cutting device is generally designated by reference numberal **90**, and it is shown as located in the lower corner of a bag **91**. The device **90** has a generally rectangular shape, including a handle **92** and a cutting member **93**. In the base of the handle **92**, there is formed an aperture **94** for spot welding as at **95**, the two sides of the bag **91** to hold the cutting device **90** loosely in position, and to draw the attention of a user to the location of the handle **92** in the event he cannot see it. Separating the handle **92** and the cutting portion **93** is an upwardly extending recess **96** which is adpated to receive a wall (W in FIG. **9**) in opening the bag.

The lower portion of the left-hand edge of the cutting device **93** is serrated as at **97**, and so is the lower horizontal portion **98**, both portions leading to a serrated point **99**.

In operation, a person holds the top of the bag **91** in one hand, grips the handle **92** in the other, and forces the recess **96** down over the wall W. This action forces the left edge of the bag over the point **99** to rupture the bag. Once ruptured, the tear in the bag is self-locating on the two serrated edges **97**, **98**, so that as the handle is continued in its downward motion over the wall W, the bag material is forced over these cutting, serrating edges to form a larger dispensing aperture. The material preferably used for the cutting device **90** is polystyrene, similar to the material out of which plastic picnic knives and forks are made.

Having thus described in detail preferred embodiments of my invention, persons skilled in the art will be able to modify certain of the structure which has been described and illustrated and to substitute equivalent materials and elements for those disclosed while continuing to practice the principle of the invention; and it is, therefore, intended that all such modifications and substitutions be covered as they are embraced within the spirit and scope of the appended claims.

I claim:

1. In combination, a sealed bag of flexible material, and a cutting device secured inside the bag, said cutting device comprising a first member providing a reaction base adapted to be held in one hand, said first member defining a first cutting edge, a cutting member adapted to be manipulated in the other hand and defining a second cutting edge adjacent said first cutting edge, and hinge means interconnecting said reaction base and said cutting member for permitting relative movement between the two, whereby relative rotation of said cutting member out of the plane of said reaction base causes said first and second cutting edges to part said bag material in a shearing motion.

2. The combination of claim **1** wherein said reaction base is joined to said cutting member by means of a hinge extending downwardly of said reaction base and over to the opposite edge of said device, said reaction base and said cutting member each having a relatively straight cutting edge extending adjacent the straight edge of the other to predetermine a tear line.

3. The combination of claim **1** wherein said bag is formed of a thermoplastic material folded over and transversely heat sealed, and wherein said cutting edge further comprises a feathered flange defining a plurality of apertures and secured in position inside said bag, the plastic material flowing into the apertures of said feathered flange to secure said device to said bag.

4. The combination of claim **1** further comprising means for securing said device in a corner of said bag, said cutting member defining a cutting point adjacent said corner.

5. In combination, a flexible, closed bag, and a device within said bag, said device comprising a single piece of sheet material and secured to said bag, said device including a reaction base defining a first cutting edge and adapted to be gripped in one hand, a cutting member defining a second cutting edge adjacent said first cutting edge and rotatable by a second hand out of the plane of the reaction base, a flexible resilient connecting member interconnecting said reaction base with said cutting member and serving to provide a resilient hinging action between said reaction base and said cutting member providing an appendage extending away from said cutting edge to serve as a gripping area for the thumb and forefinger of one hand and to add bulk

to said cutting edge, said cutting member further defining a notch whereby said cutting member may be separated from said reaction base and said bag may be folded over, said cutting member acting to clip the folded bag to said reaction base under spring action of said connecting member when said cutting member is pulled out of an aperture formed in said bag.

6. The combination of claim 5 wherein said device is formed of sheet metal and wherein said reaction base and said cutting member are at least partially defined by respective straight lines, said straight lines extending adjacent one another, the straight edge of said cutting member terminating in a sharp cutting point for puncturing said bag.

7. A package comprising: a flexible, thermoplastic sealed bag; fluent material in said bag; and a cutting device located within said bag, said cutting device comprising a rigid flat body including a handle portion adapted for gripping by the hand of a person, and a cutting portion providing first and second cutting edges adjacent one corner of said bag, said cutting edges cooperating with each other to generally conform to the corner portion of said bag and to define a puncture point located immediately adjacent the crevice of said corner for starting a tear and thence locating the torn portion of said bag over one of said cutting edges, said device further defining an open recess between said handle portion and said cutting portion adapted to receive a rigid wall of a container into which the contents of the bag are to be dispensed; said handle portion of said device being rigidly secured to said bag whereby a person may open the bag by gripping the handle of said device and forcing said recess over the wall of a container to thereby puncture the corner of said bag with said point and draw the edge of said bag over said cutting edge of said device to sever the bag and dispense the contents thereof under gravity.

* * * * *