March 26, 1957 K. R. LUNG 2,786,417

PUMPING SYSTEM AND COUPLING THEREFOR

Filed June 17, 1954

FIG-1

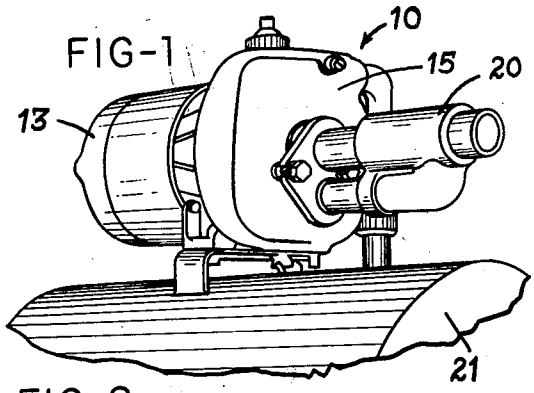

FIG-3

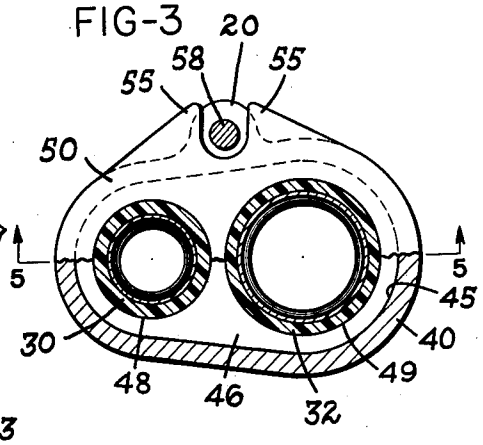

FIG-2

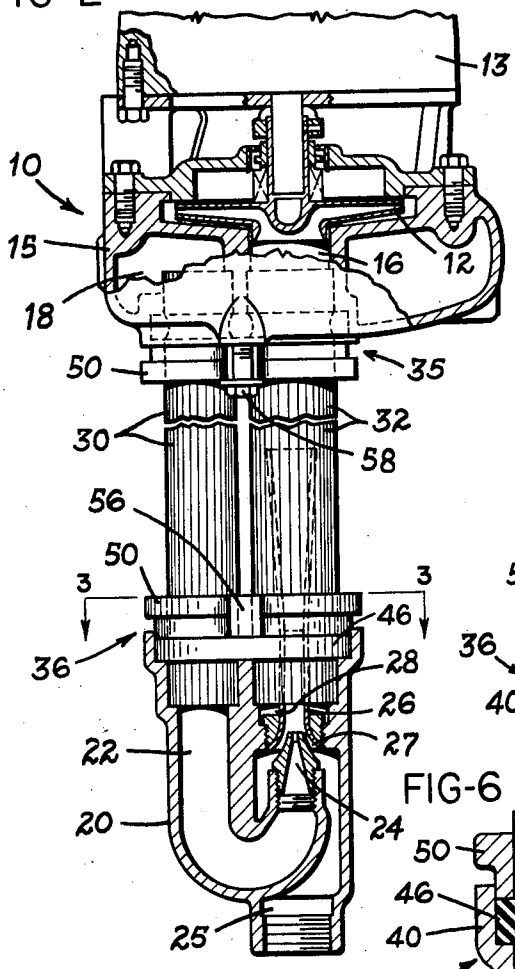

FIG-4

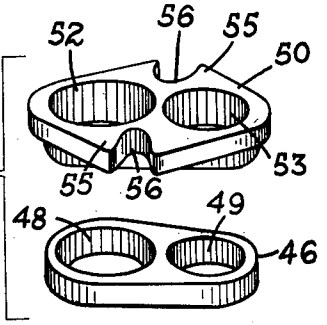

FIG-5

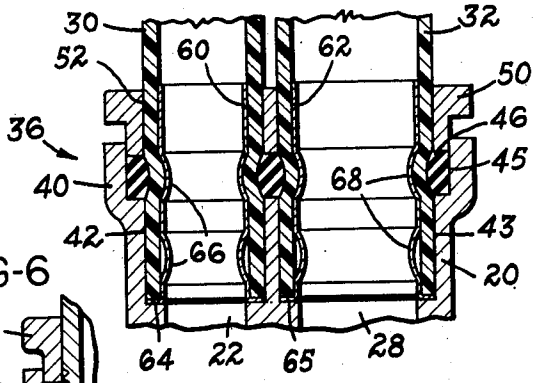

FIG-6

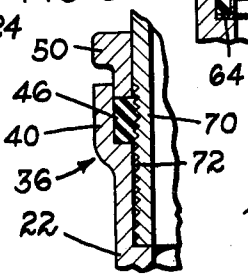

INVENTOR.

KENNETH R. LUNG

BY

Marshall, Bibel, French & Bragg

ATTORNEYS

United States Patent Office 2,786,417 Patented Mar. 26, 1957

2,786,417

PUMPING SYSTEM AND COUPLING THEREFOR

Kenneth R. Lung, Dayton, Ohio, assignor to The Tait Manufacturing Company, a corporation of Ohio

Application June 17, 1954, Serial No. 437,515

5 Claims. (Cl. 103—5)

This invention relates to pumping systems and coupling means for use in those systems.

Centrifugal or impeller type pumps are widely used in pumping systems, particularly in well pumping systems due in large part to their relative simplicity of construction and lack of frictional contacts or close fits. However, certain inherent characteristics of this type pump quite often make it desirable to use a jet booster or ejector pump to supply the fluid to the centrifugal pump intake at slight pressure. Two types of pumping systems frequently used are referred to as shallow well and deep well pumps. In the shallow well type of pump, commonly used with wells having a depth to the water surface of about 25 feet or less, the ejector is attached to the main pump at the ground surface, and only the suction line to the ejector extends into the well. In deep well systems the jet booster pump is suspended within the well beneath the main pump, which is located at ground level above the well, to draw fluid into the main pump intake for maintaining that intake line under a slight pressure.

In both such systems the main pump and the booster or ejector pump are connected to each other by a high pressure line and a relatively low pressure line, usually extending adjacent and parallel to each other between the two pumps. A portion of the high pressure output of the main pump is diverted into the high pressure line to supply the energy fluid for activating the ejector, which in turn creates a negative pressure in a venturi, in a well known manner, to draw fluid into the main pump intake. Deep well systems must in each case be assembled to fit the needs of a particular installation, since the lengths of connecting pipe needed will vary with the depth of the well and the height of the mounting for the main pump. Therefore, it is desirable to be able to complete the assembly at the installation, with as little equipment as possible required to do the job.

In accordance with this invention the main pump and the booster pump may be connected by lengths of steel pipe, which may be threaded at the ends and connected together in the usual manner, or these pumps may be connected by lengths of flexible pipe, preferably plastic pipe. Such flexible pipe may be easily cut into desired lengths, and by means of this invention may be attached between the pumps without need of any threading, soldering or similar operations being required.

It is accordingly a primary object of this invention to provide a pumping system which utilizes flexible pipe to connect the jet booster pump to the main pump and to provide coupling members which will secure the pipes to these pumps.

Another object of this invention is to provide a coupling which will secure pipe to the main pump housing of a pumping unit against the action of high pressure fluid from the pump tending to separate the coupling without threading, soldering, or similarly affixing the pipe to the housing.

A further object of this invention is to provide a coupling which will secure flexible pipe to a pump housing,

wherein the coupling includes an insert member for supporting the inner surface of the pipe at the coupling and a deformable seal which is locked to the pump housing and forced against the outer surface of the pipe at the coupling to force the walls of the pipe into frictional engagement with the insert member.

Other objects and advantages of the invention will be apparent from the following description, the accompanying drawing and the appended claims.

In the drawing—

Fig. 1 is a perspective view of a centrifugal pump and a jet booster pump connected in accordance with the invention for shallow well operation;

Fig. 2 is a detail view partly in section and partly in elevation of a centrifugal pump and a jet booster pump connected in accordance with the invention;

Fig. 3 is a partially broken section taken along line 3—3 of Fig. 2;

Fig. 4 is an exploded perspective view of the gland and sealing member provided by this invention;

Fig. 5 is a partial section taken along line 5—5 of Fig. 3; and

Fig. 6 is a partial section similar to Fig. 5 showing a modified form of the invention.

Referring to the drawings, which illustrates preferred embodiments of the invention, there is seen a centrifugal main pump indicated generally at 10 as including an impeller 12 driven by a suitable motor 13, and mounted on a housing 15 to receive fluid through an inlet compartment 16 for delivery of the fluid to a suitable source. As mentioned previously, centrifugal pumps often require the use of a booster or ejector pump to feed fluid under a slight pressure to the inlet of the main pump. Therefore, a portion of the high pressure output of the impeller 12 is diverted into an outlet compartment 18 to supply high pressure working fluid for operating a jet type booster pump indicated generally as having a housing 20.

Referring to Fig. 1, the main pump and booster pump are shown connected immediately adjacent each other, and mounted upon a suitable storage tank 21 which receives the output of the main pump, for shallow well installations. Fig. 2 shows the same main pump 10 and booster pump housing or blade 20 connected for deep well operation, wherein the booster pump is located within the well in a well known manner.

The booster pump body includes a high pressure inlet 22, a nozzle 24, a suction intake 25 for drawing fluid from a source, for example a well, a venturi tube 26 which has its inlet 27 in communication with intake 25, and into which the jet nozzle 24 projects the working fluid from the inlet 22 at high velocity, and an outlet 28 which directs the output of the booster pump to the inlet compartment 16 of the centrifugal pump. In operation the jet booster pump, in a well known manner, creates a low pressure or suction area in the venturi 26, drawing fluid through intake 25 into the venturi and forcing it out through outlet 28.

The booster pump may, of course, be located at any desirable depth below the pump housing 15, and the present invention provides for quick, accurate and relatively simple adjustment of this distance. In carrying out this invention a pair of flexible pipe members, indicated as a high pressure supply line 30 and a low pressure line 32 are arranged to connect outlet port 31 for chamber 18 with the high pressure inlet 22 of the booster pump, and the outlet 28 of the booster pump with inlet 43 of the centrifugal pump, respectively. Pipes 30 and 32 are of any suitable type of material, preferably plastic pipe which may be easily cut into any desired length. The pipes are connected to the pump housing 15 by means of a coupling 35 and to the booster pump housing 20 by means of coupling 36. Since these couplings are iden-

tical to each other only coupling 36 will be described in detail, but it is to be understood that the following description applies equally to coupling 35.

Referring particularly to Fig. 5, there is seen an annular boss 40 formed on the housing 20 extending around high pressure inlet 22 and outlet 28. Both the inlet and outlet have formed therein enlarged end portions 42 and 43, respectively, which form ports for slidably receiving the ends of pipes 30 and 32 for purposes of coupling the pumps together. The boss 40 defines a shallow depression or cavity 45 which surrounds the ports 42 and 43 as shown and in which is placed a deformable seal member 46, preferably of rubber or similar material which is relatively impervious to attack by the fluid being pumped. The seal member has a pair of apertures formed through it, indicated at 48 and 49, in registry with inlet 22 and outlet 28 to permit passage of the connecting pipes through the seal. A gland member 50 fits over seal 46 and also has a pair of ports 52 and 53 formed through it to receive pipes 30 and 32, and it is constructed on its inner face with a projection complementary to the cavity 45 for cooperation with the wall of the cavity to confine the seal member 46 in the assembled position of these parts. The gland includes a pair of wing-like extensions 55 at opposite sides of the gland which define slots 56 at the opposite sides thereof for cooperation with connecting bolts 58 (one of which is seen in Fig. 3) for tightening the gland 50 down upon seal 46 within the cavity 45.

When flexible connecting pipe to be employed, each pipe 30 and 32 has its respective ends braced by insert members, the lower two of which are seen in Fig. 5 as including tube members 60 and 62 having outwardly extending lip portions 64 and 65 at one end, and radially inwardly extending corrugations or grooves 66 and 68. The insert tubes 63 and 62 are forced into the ends of pipes 30 and 32 before assembly thereof within the couplings, and the lip portions 64 and 65 act as stops to locate the corrugations 66 at a predetermined distance from the ends of the pipes. This distance is so selected that when the pipes are thrust fully into the inlet and outlet end portions 42 and 43 of the housing, the corrugations 66 and 68 respectively are positioned in the same horizontal plane as the seal 46.

Fig. 4 illustrates the gland and sealing member in spaced relationship preparatory to insertion in cavity 45 (as in Fig. 5), and it will be noted that sealing member 46 extends completely around and between pipes 30 and 32, thus exerting a force radially inwardly upon all sides of the pipe walls as gland 50 is tightened down by bolts 58, as well as maintaining the predetermined desired spacing between these pipes. The radial forces resulting from this deformation push the side walls of pipes 30 and 32 into corrugations 66 and 68 and complete a sealed coupling which not only prevents the high pressure fluid from forcing the pipe away from the pump housing, but also acts to maintain the pipes 30 and 32 in spaced alignment, as seen in Fig. 2, and allows the booster pump housing 20 to be attached, by means of these coupling connections alone, to the main pump in operative position.

It is seen therefore, that the present invention provides means for securely coupling flexible pipe between the main pump and the jet booster pump, and that use of this invention permits assembly of the pumping system at the installation, thus tailoring the system to the exact needs of that installation. Since the coupling 35 is effectively identical with coupling 36 as already noted, including the cavity 69 in the outer wall of housing 15 for receiving the complementary projection on the gland 50, only a few relatively simple operations are necessary to complete the coupling, for example, determining the required length of the piping and cutting the flexible pipes to that length, assembling these pipes in the couplings 35 and 36, and tightening of the bolts 58 to complete the coupling and prepare the hydraulic circuit between the booster pump and the main pump for operation.

The present invention is equally applicable to the use of steel or other metal connecting pipes between the main pump and the ejector. For example, in assembling the shallow well system of Fig. 1 it may be found that metal connecting pipes are already threaded into the booster pump housing 20, and that it is merely necessary to attach these short lengths of pipe to the main pump housing 13. Whether or not the ends of these metal pipes are threaded, they may be received within and engaged by the coupling provided by this invention. Referring to Fig. 6, a fragment of metal pipe 70 threaded at 72 is seen to be received within the coupling 36, as an example of the use of metal pipe with the coupling. The operation is the same as if connecting flexible pipe to the housing as described above, except that the insert members are of course unnecessary. The metal pipe is thrust fully into the respective inlets and outlets, and the gland 50 is tightened down to force seal 46 to expand laterally within boss 40 and exert a radial force against the pipe, thus frictionally retaining it within the coupling. In the case of threaded pipe such as illustrated in Fig. 6, the sealing member 46 will be forced into the threads 72 tending to increase the frictional engagement between the pipe and the sealing member.

It is of course understood that the coupling provided by this invention may be utilized with metal pipe at either the main pump housing 15 or the booster pump housing 20, or at both places if so desired. In any event the coupling member provides a quick and accurate means of connecting the pipes to the pump housings and maintaining the required spacing between the pipes.

The coupling provided by this invention makes adaptability of the same main pump and ejector or booster pump for shallow well or deep well installations a relatively simple matter, since the only variation required is in the use of different lengths of connecting pipe. The pumps may, as indicated in Figs. 1 and 2, be located at any suitable distance from each other, and may be easily connected together by the coupling members 35 and 36, wherein only the tightening of a few bolts is required to complete the connections.

While the forms of apparatus herein described constitutes preferred embodiments of the invention, it is to be understood that the invention is not limited to these precise forms of apparatus, and that changes may be made therein without departing from the scope of the invention which is defined in the appended claims.

What is claimed is:

1. In a convertible centrifugal-jet pumping system including a main pump housing and a jet pump body adapted selectively for mounting in closely coupled relation with said housing for shallow well operation and for mounting in spaced and dependent relation with said housing for deep well operation, said body having therein a pair of pressure and discharge ports located in closely spaced relation to receive connecting pipes lying within the projected area of said body for insertion therewith in a well, the combination of means in said pump housing defining a pair of ports arranged in substantially the same closely spaced relation as said ports in said body for direct connection thereto for shallow well operation, a pair of pipes adapted for insertion at opposite ends in said ports in said housing and said body, a gland adapted for connection to said housing in overlying relation with said ports therein and having a similar pair of ports therethrough for receiving said pipes, means defining a unitary cavity in one of the opposed faces of said gland and said housing and including a peripheral wall surrounding said ports in said face and spaced outwardly therefrom, a deformable sealing member substantially filling said cavity and having a pair of spaced openings therethrough registering with said ports in said one face for passage of the ends of said pipes into said housing

ports to provide a portion thereof extending between said pipes, and means for forcing said gland and said housing together in compressing and confining relation with said sealing means deforming said sealing means into frictionally sealing engagement with said pipes and said peripheral wall of said cavity to secure said pipes to said housing in supporting relation with said jet pump body.

2. In a centrifugal-jet pumping system including a centrifugal pump housing and a jet pump housing adapted to be connected selectively together in different relative spacings, each of said housings having a pair of ports located in a wall thereof in closely spaced relation to each other to lie within the axially projected area of said pump housing, the combination of a pair of pipes for connecting said ports, one end of each of said pipes being adapted for direct slidable insertion in said ports in one of said housings, a gland adapted for connection to said housing in overlying relation with said ports therein and having a similar pair of ports therethrough for receiving said pipes, means defining a unitary cavity in one of the opposed faces of said gland and said one housing and including a peripheral wall surrounding said ports in said one face and spaced outwardly therefrom, a deformable sealing member substantially filling said cavity and having a pair of openings therethrough spaced to register with said ports for passage of the ends of said pipes therethrough and having a portion of said member extending therebetween, means for forcing said gland and said housing together in compressing and confining relation with said sealing means deforming said sealing means into frictionally sealing engagement with said pipes and said peripheral wall of said cavity to secure said pipes to said one housing, and means for securing the other ends of said pipes to the other said housing.

3. The combination defined in claim 2, comprising pipe having said one end thereof threaded for increased frictional engagement with said deformed sealing member.

4. The combination defined in claim 2, comprising pipe of flexible deformable material, a pair of insert tubes each receivable in said one end of one of said pipes and including an outwardly projecting lip adapted to seat on said pipe end, said lips being receivable in said ports, and said tubes each having an inwardly extending peripheral groove adapted to lie radially within said sealing member and to receive said deformable pipe material under the pressure of said deformed sealing member.

5. A pumping system comprising a main pump, a housing for said main pump, a jet booster pump including a housing having an outlet and a high pressure inlet for supplying working fluid to said jet pump, pipes extending from said outlet and said high pressure inlet of said booster pump housing in closely spaced generally parallel relation, means defining an inlet port and a high pressure outlet port in said main pump housing in closely spaced relation for slidably receiving the ends of said pipes opposite from said jet pump housing, a unitary deformable seal member engaging said main pump housing about said inlet and outlet therein and having a pair of apertures formed therethrough and receiving said pipes, a gland member having spaced openings formed therethrough receiving said pipes in slidable relation, said gland member being positioned on the opposite side of said seal member from said main pump housing, means on one of the opposed faces of said main pump housing and said gland member confining the outer periphery of said seal member to prevent substantial deformation thereof in a direction away from said pipes, and means for drawing said gland member in clamping relation toward said main pump housing to deform said seal member in a direction radially inwardly of each of said pipes into frictional sealing engagement with the walls of said pipes to support said pipes and said jet pump housing on said main pump housing.

References Cited in the file of this patent

UNITED STATES PATENTS

1,304,910	Robinson	May 27, 1919
1,558,592	Chester	Oct. 27, 1925
2,167,258	Wilson	July 25, 1939
2,623,466	Tinker	Dec. 30, 1952
2,628,850	Summerville	Feb. 17, 1953
2,649,742	Armstrong	Aug. 25, 1953
2,701,147	Summerville	Feb. 1, 1955
2,735,697	Zanin	Feb. 21, 1956

FOREIGN PATENTS

20,687	Great Britain	Sept. 16, 1915