Oct. 9, 1951 C. E. WALTON 2,571,088

GOLF CLUB BAG SUPPORT

Filed April 20, 1949

FIG. 1.

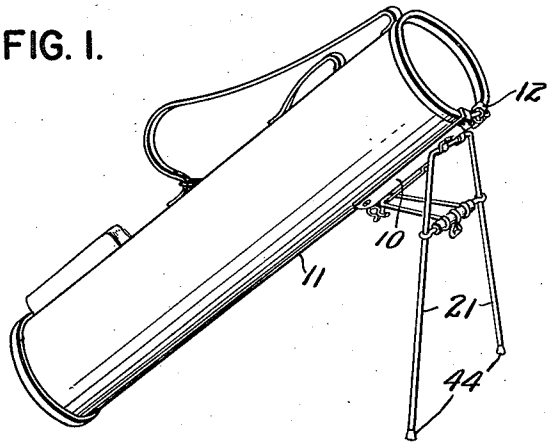

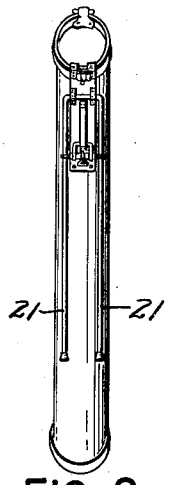

FIG. 2.

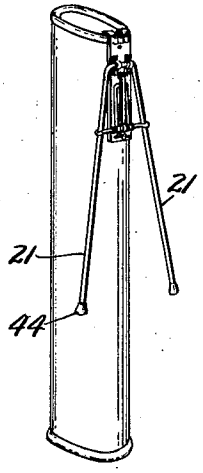

FIG. 3.

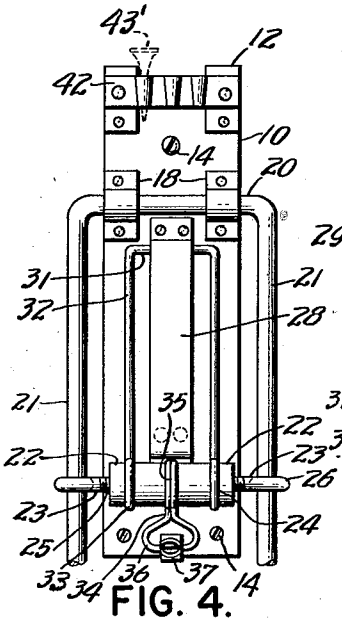

FIG. 4.

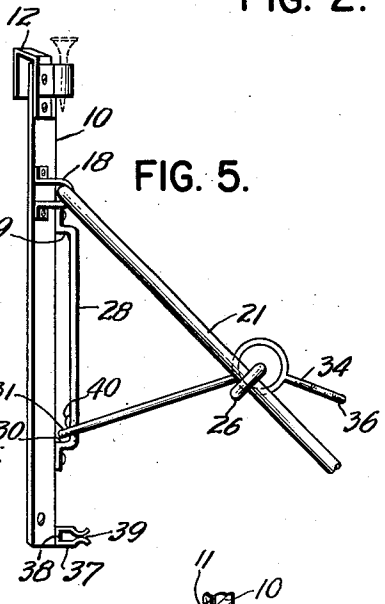

FIG. 5.

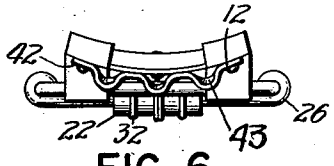

FIG. 6.

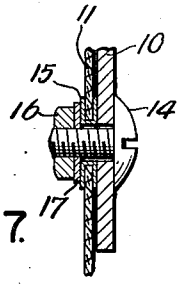

FIG. 7.

INVENTOR

CHARLES EMMET WALTON

BY

Wm. Kilpatrick

ATTORNEY

Patented Oct. 9, 1951

2,571,088

UNITED STATES PATENT OFFICE

2,571,088

GOLF CLUB BAG SUPPORT

Charles Emmet Walton, New York, N. Y.

Application April 20, 1949, Serial No. 88,579

12 Claims. (Cl. 248—96)

1

The herein described invention relates to supports and more particularly supports for golf club bags though it is noted that some of the broader claims are not limited to golf bags.

The object of a golf bag support is to support the bag in an inclined approximately vertical position to allow, with a minimum of effort, the easy withdrawal and replacement of any club carried, without letting the bag lie on the ground, with consequent fouling from water, mud or dust or from chemical fertilizer sometimes used on fairways.

To be thoroughly satisfactory for the purpose intended, such a support should be simple, strong, durable, light in weight, inexpensive in construction, and consequently not costly in price. It should be compact with a minimum of obtruding parts, easily operated, firm of control of its supporting legs in all directions, not detachable, as when bag with clubs falls or is blown over, and sufficiently flexible to avoid distortion of parts when subjected to abuse, and should have means for holding the supporting legs securely against the bag while the bag is being carried over the course or while being stored.

Numerous golf club bag supports have been proposed and some manufactured and marketed, but none heretofore has been entirely satisfactory for various reasons, such as being too cumbersome, too costly, or too easily detached from bag. This is evidenced by fact that the only golf bag support on the market to-day is one which depends on gripping action on the mouth portion of the bag for its adherence to the bag, and, while simple in construction and inexpensive, does not answer the purpose satisfactorily for various reasons among which may be stated its invariable detachment from bag when bag with clubs in it falls or is blown over, and the absence of means to prevent the supporting legs from folding up when bag is moved forward.

Objects of the present invention are to provide a golf bag support incorporating all the above named requirements and which will effectively maintain the bag in an approximately upright position while the golfer is playing, regardless of the nature of the terrain surface.

Other objects are to provide a golf bag support which is extremely simple, strong, durable, light in weight, compact, inexpensive, of all metal riveted or welded construction and which requires no skill and a minimum of effort in its manipulation.

My improved golf club bag support presents the following distinctive features: it allows the diverging and bringing together of the supporting legs, as desired within design limits, and always maintains firm control of the legs without slackness. The supporting legs are locked in the supporting or operative position at a predetermined degree of divergence of the legs away from the bag, and the legs cannot fold up unless manipulated by the player, regardless of whether the bag is moved forward, backward, sideways or falls or is blown over.

2

My improved golf bag support cannot accidentally become detached from the bag, is sufficiently flexible to avoid distortion of the parts when subjected to abuse, and provides means for holding the supporting legs securely against the bag for storing, or while the bag is carried over the course, thus eliminating flapping about of the legs to the annoyance of the player.

Still other objects of the invention will appear as the description proceeds; and while herein details of the invention are described in the specification and some of the claims, the invention as described in the broader claims is not limited to these, and many and various changes may be made without departing from the scope of the invention as claimed in the broader claims.

The inventive features for the accomplishment of these and other objects are shown herein in connection with an improved golf club bag support which briefly stated, includes a supporting plate adapted to be secured on the upper part of the bag and carrying a supporting leg member hinged to said support and having downwardly extended legs adapted to be relatively diverged. An assembly adapted to be lengthened and shortened connects said legs and comprises a body having axially alined internal threads of opposite pitch and bolts secured to said legs and having threads received in the threads of the body whereby rotation of said body diverges said legs or brings them closer together. An elongated guide mounted on and spaced from the support longitudinally of the bag slidably guides the yoke of a strut pivoted to said assembly and adapted when the yoke is moved up and down to diverge said legs from the bag or bring them adjacent to the bag. A handle on said body assists in rotating the body to elongate or shorten said assembly; and a device on said support is adapted to releasably hold said handle to hold the body from turning, and to hold the legs adjacent to the bag.

In the accompanying drawing showing, by way of example, one of many possible embodiments of the invention,

Figs. 1, 2 and 3 are perspective views showing the different positions of the legs and bag;

Figs. 4 and 5 are respectively front and side elevations and plan showing the supporting plate and parts carried thereby;

Fig. 6 is an upper end view of said plate and parts; and

Fig. 7 is a fragmental sectional view, partly in elevation, showing a bolt for securing the plate to the bag.

The various parts of my golf bag support are carried on a downwardly elongated metal supporting plate **10** of outwardly curved horizontal cross-section adapted to be secured to the upper part of the bag **11** and having metal strap hangers **12** secured to its upper corners and adapted to be secured over the top edge of the bag, the plate **10** being extended down on the outer face of the bag and secured fast to the bag by suitable securing means such as bolts **14** or the like passing through grommets **15**, (Fig. 7) to prevent the bag material from fraying, the bolts being secured in place by nuts **16** engaged against suitable lock washers **17**.

A pair of straps forming hinge bearings **18** riveted, welded or otherwise secured fast on the upper part of the plate a short distance from its upper edge pivotally receive the yoke part **20** of an inverted U-shaped somewhat springy wire-rod supporting member **20, 21** having legs **21** adapted when not in use to extend down the side of the bag, parallel with each other and the bag as in Fig. 2, and adapted to swing out from the bag and be diverged from each other to form with the bag a tripod adapted to stand and hold the bag in inclined position, the bag being one leg of the tripod, as in Fig. 1.

An assembly **22, 23** adapted to be elongated and shortened connects said legs near the lower part of the plate and comprises an elongated substantially tubular body **22** having at opposite ends annular grooves **24** around the body, and internal threads of opposite pitch. Eye bolts **23** having threads **25** received in the threads of the body have outer end eyes **26** receiving and welded or brazed or otherwise secured to said legs **21**, whereby the legs may be held parallel as in Fig. 2, and when said body is turned in one direction the legs may be diverged from each other and held in diverged position as in Figs. 1 and 3 and when the body is turned in the opposite direction, the legs may be restored to parallelism.

A retaining guide strap or strip **28** of metal is disposed exteriorly along the longest axis of said plate **10** to near the upper and lower parts of the plate and has its ends inwardly offset and secured fast to the plate to provide upper and lower shoulders **29** and **30** and to provide a long intermediate part slightly spaced from the plate. An inverted substantially U-shaped strut **31, 32** having eyes at the ends **33** of its arms **32** pivotally received in said grooves **24** of said body has a short yoke **31** transverse to the guide strip and slidable between the strip and plate when the said supporting member **20, 21** is being pivotally moved to be diverged from the bag or restored to parallel relation with the bag. Engagement by said short yoke **31** with said lower shoulder **30** limits outward movement of the strut legs.

A short handle **34** disposed radially of said body has a curved end part **35** disposed and suitably secured partly around the body **22**. Said handle **34** is adapted to assist in turning the body **22**, and has a transversely elongated eye **36** at the outer end adapted to be held by a slightly resilient U-shaped clip **37** having its yoke part **38** mounted fast on the lower part of said plate and forming an outwardly open recess having a narrow inlet **39** and adapted to receive and yieldably hold said elongated eye **36** to hold the body **22** from turning and to hold the body and legs close to the bag. Thus said handle **34** has the triple function of turning the body **22**, holding the body from turning and holding the legs adjacent to the bag for carrying.

Two screws or rivets secured in the lower part of said guide strip **28** has an inner rounded head **40** adapted to engage and yieldably hold said short yoke when moved down to the lower shoulder **30**, when the legs are diverged and the strut is an approximate right angle to the bag, in which position said strut, strip and head **40** cooperate to substantially positively lock the legs in diverged position for supporting the bag in inclined standing position as in Fig. 1.

An elongated plate **42** secured across the upper margin of the supporting plate and having its ends secured to the supporting plate is provided intermediately with a series of downwardly pointed inner recesses **43** cooperating with the supporting plate for holding wooden or composition golf tees **43'**.

Tips **44** of rubber or other elastic material fitted on the free ends of the legs give better footing and prevent the metal ends of the legs from coming in contact with the person carrying or manipulating the bag.

The operation of this golf bag support is very simple. Starting from the compact closed position as shown in Fig. 2, either supporting leg **21** is grasped by either hand and the legs pulled out to the position shown in Fig. 5, the spring clip **37** releasing the handle without any appreciable effort on part of the operator. The yoke **31** of the strut slides down underneath retaining guide strip **28** and locks behind the head **40** adjacent to the shoulder **30** (Figs. 1 and 5) and limits the movement of the legs outward, the yoke **20** rotating within the hinge bearings **18**. By rotating the body **22** by manipulating the handle **34** the legs are diverged from each other the desired amount. This places the bag **11** and the legs **21** in the supporting or operative relation as shown in Fig. 1. Then when the player wishes to move along the course to another location he simply raises with his hand the yoke **31** which travels up underneath the guide strap **28** allowing the legs **21** to move to the position of Fig. 3 adjacent to the bag with the handle **34** engaging in spring clip **37** and holding the legs securely adjacent to the bag, thus allowing the bag with clubs therein and support to be carried over the course without any inconvenience from movement of the supporting means. When ready for the next shot, the player pulls out the legs **21** and all parts are in an operative position. When the game is finished and the equipment is ready for storing in a locker, the legs are brought to the position of Fig. 2 by rotating the body **22** and adjusting the yoke **31** to its upper position and the equipment returns to a compact position as shown in Fig. 2.

I claim as my invention:

1. A golf club bag support comprising a support adapted to be secured on the upper part of the bag; a supporting member hinged to said support and having downwardly extended legs adapted to be relatively diverged; an assembly connecting said legs comprising a body having axially alined internal threads of opposite pitch and bolts secured to said legs and having threads received in the threads of the body; an elongated guide mounted on the support longitudinally of the bag; a strut pivoted to said assembly and

having a part slidably engaged with said guide; a handle on said body; and a device on said support adapted to releasably hold said handle.

2. A golf club bag support comprising a downwardly elongated metal supporting plate adapted to be secured to the upper part of the bag; an inverted U-shaped wire rod supporting member having a yoke part hinged to the upper part of the plate and having downwardly extended legs; an elongated substantially tubular body having at opposite ends annular grooves around the body and internal threads of opposite pitch; eye bolts having threads received in the threads of the body and having outer end eyes receiving and secured to said legs; a guide strap disposed exteriorly along the plate longitudinal to the bag and having its ends inwardly offset and secured fast to the plate to provide a lower shoulder and an intermediate part spaced from the plate; a projection on the inner face of the strap just above said shoulder; a substantially U-shaped strut having eyes at the end of its arms pivotally received in said grooves and having a yoke slidable between the strip and plate; said yoke being disposable between said projection and shoulder; said shoulder limiting downward movement of the strut and inward movement of the legs; a short handle secured radially of said body.

3. A support as in claim 2 comprising a transversely elongated eye at the outer end of said handle, and a resilient clip on the lower part of said plate and forming a recess adapted to receive and yieldably hold said elongated eye.

4. In combination, a supporting plate adapted to be secured on the upper part of a bag; a pair of straps forming hinge bearings riveted or welded or otherwise secured fast on the upper part of the plate a short distance from its upper edge; an inverted U-shaped wire rod supporting member having a yoke part hinged under said straps, and legs adapted when not in use to extend down the side of the bag parallel to each other and the bag and adapted to swing out from the bag and to be diverged to form with the bag a tripod adapted to stand, the bag being one leg of the tripod; an elongatable and shortenable assembly connecting said legs near the lower part of the plate; tips of rubber or other elastic material fitted on the free ends of the legs to give better footing and to prevent the metal ends of the legs from coming in contact with the players; an elongated guide on the plate longitudinal to the bag; and a strut pivoted to said cross member and having a part slidably engaged with said guide.

5. A golf club bag support comprising a plate adapted to be secured on the upper part of the bag; a supporting member hinged to said support and having downwardly extended legs adapted to be relatively diverged; an elongated substantially tubular body having at opposite ends annular grooves around the body and internal threads of opposite pitch; eye bolts having threads received in the threads of the body and having outer end eyes receiving and welded or brazed to said legs; whereby the legs may be held parallel, and when said body is turned the legs be diverged from each other and held in diverged position; an elongated guide mounted on and spaced from the plate longitudinally of the bag; a strut having a part slidably engaged with said guide and having arms having curved ends pivotally received in said grooves; a handle on said body; and a device on said support adapted to releasably hold said handle.

6. A golf club bag support comprising a support adapted to be secured on the upper part of the bag; a supporting member hinged to said support and having downwardly extended legs adapted to be relatively diverged; an assembly connecting said legs comprising an elongated body having axially alined internal threads of opposite pitch, and bolts secured to said legs and having threads received in the threads of the body; an elongated guide mounted on the support longitudinally of the bag; a strut pivoted to said assembly and having a part slidably engaged with said guide; a handle radially mounted on said body; and a device mounted on said support and adapted to releasably hold said handle; whereby said assembly, handle and device cooperate to serve the multiple function of turning the body, shortening and lengthening the assembly, holding the body from turning, diverging the legs and holding the body and legs adjacent to the bag, for carrying.

7. A golf club bag support comprising a plate adapted to be secured on the upper part of the bag; a supporting member hinged to said plate and having downwardly extended legs adapted to be relatively diverged; a body having axially alined internal threads of opposite pitch; bolts secured to said legs and having threads received in the threads of the body; an elongated guide mounted on and spaced from said plate longitudinally of the bag; a strut pivoted to said body and having a part slidably engaged with said guide; a short handle disposed radially of said body and having its inner end disposed partly around the body and secured to the body; said handle being adapted to assist in turning the body, and having a transversely elongated eye at the outer end; and a slightly resilient U-shaped clip having its yoke part mounted on the lower part of said plate and forming an outwardly open recess having a narrow inlet and adapted to receive and yieldably hold said elongated eye to hold the body from turning.

8. In combination, a downwardly elongated plate adapted to be secured on the upper part of elongated container; a supporting member pivoted to the plate comprising downwardly extended legs hinged to said support and adapted to be relatively diverged; an assembly comprising an elongatable and contractable cross member connecting said legs; a retaining guide strap of metal disposed exteriorly along the longest axis of said plate to near the upper and lower parts of the plate and having its ends inwardly offset and secured fast to the plate to provide upper and lower shoulders and an intermediate part slightly spaced from the plate; an inverted substantially U-shaped strut having eyes at the ends of its arms pivotally connected to said cross-member, and having a short yoke transverse to the guide strip and slidable between the strip and plate when the said supporting member is being pivotally moved to be diverged from the container or restored to parallel relation with the bag, engagement by said short yoke with said lower shoulder limiting inward movement of the strut and outward movement of the legs; the lower part of the guide strips having an inner rounded head secured thereto to hold said short yoke when moved down when the legs are diverged from the container for holding and locking the legs and container in inclined position for supporting the container in inclined standing position.

9. In combination, a supporting plate adapted to be secured on the upper part of a bag; a pair

of straps forming hinge bearings secured fast on the upper part of the plate a short distance from its upper edge; an inverted U-shaped wire rod supporting member having a yoke part hinged under said straps, and legs adapted when not in use to extend down the side of the bag parallel to each other and the bag and adapted to swing out from the bag and to be diverged to form with the bag a tripod adapted to stand, the bag being one leg of the tripod; an elongatable and shortenable assembly forming a cross-member connecting said legs near the lower part of the plate; an elongated guide on the plate longitudinal to the bag; and a strut pivoted to said cross member and having a part slidably engaged with said guide.

10. A golf club bag support comprising a downwardly elongated plate adapted to be secured on the upper part of the bag; a supporting member having a yoke part hinged to the upper part of the plate and having downwardly extended legs; an elongatable and shortenable assembly connecting said legs near the lower part of the plate; a guide strap longitudinally mounted on and having an elongated intermediate spaced part spaced from the plate; and a stiff one-piece substantially U-shaped strut having a yoke slidable under the strip and arms pivoted to said assembly and held by the assembly against movement longitudinal to the assembly; said one-piece strut and the part of the assembly between said arms constituting a substantially stiff frame enhancing the rigidity of the support in use.

11. A golf club bag support comprising a supporting plate adapted to be secured to the upper part of the bag; extended legs hinged to the upper part of said plate; an elongated cross member having its opposite ends secured fast to said legs; a wide elongated guide strap disposed exteriorly longitudinally along said plate and having an intermediate part slightly spaced from the plate, an upwardly facing shoulder at the lower end and laterally spaced projections just above said shoulder; and a one-piece substantially U-shaped strut having its arms pivotally secured to said cross member and held against movement longitudinal to the member and having a yoke slidable between the strap and plate and engageable between said shoulder and said projections and held by the shoulder and projections against excessive twisting movement of the strut.

12. A golf club bag support comprising a downwardly alongated metal supporting plate adapted to be secured to the upper part of the bag; a one-piece inverted U-shaped supporting member having a yoke part hinged to the upper part of said plate, and having downwardly extended legs; an elongated substantially tubular body having at opposite ends annular grooves around the body and axially alined internal threads of opposite pitch; bolts secured fast to said legs and having threads received in the threads of the body, whereby the legs may be drawn toward each other or diverged from each other; a wide elongated guide strap disposed exteriorly longitudinally along said plate having its ends inwardly offset and secured rigidly fast to the plate to provide a lower shoulder and an elongated intermediate part slightly spaced from the plate; a one-piece substantially U-shaped strut having eyes at the ends of its arms snugly pivotally received in said grooves and held by the grooves against movement longitudinal to the body; said strut having a yoke slidable between the strap and plate to allow said supporting member to be diverged from the bag; said shoulder limiting downward movement of the strut; and a rounded projection on the inner face of the strap a short distance above said lower shoulder to hold said yokes against upward movement.

CHARLES EMMET WALTON.

REFERENCES CITED

The following references are of record in the file of this patent:

UNITED STATES PATENTS

Number	Name	Date
1,686,774	Sperry	Oct. 9, 1928
1,752,114	Shaw	Mar. 25, 1930
1,769,011	Bickford	July 1, 1930
1,887,838	Gunther	Nov. 15, 1932
1,924,182	Fritz	Aug. 29, 1933
1,961,454	Reichart	June 5, 1934
2,324,439	Thommen	July 13, 1943

FOREIGN PATENTS

Number	Country	Date
178,778	Great Britain	Aug. 27, 1922