Oct. 31, 1961 A. GRÄFINGHOLT 3,006,120

DEVICE FOR EVACUATING AND GAS-FILLING BAG PACKAGES

Filed May 12, 1960 4 Sheets-Sheet 1

Fig. 1

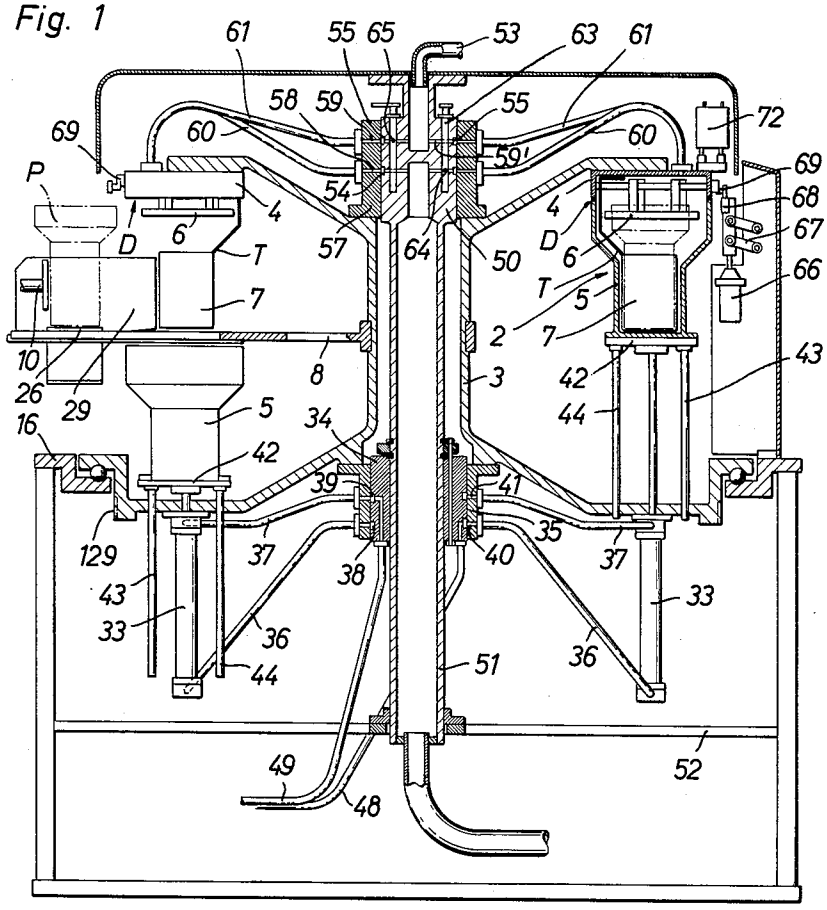

Fig. 4

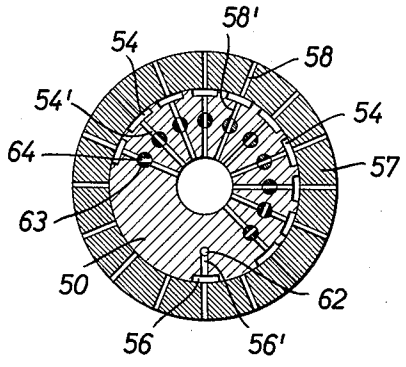

DEVICE FOR EVACUATING AND GAS-FILLING BAG PACKAGES

Filed May 12, 1960 4 Sheets-Sheet 2

Fig. 2

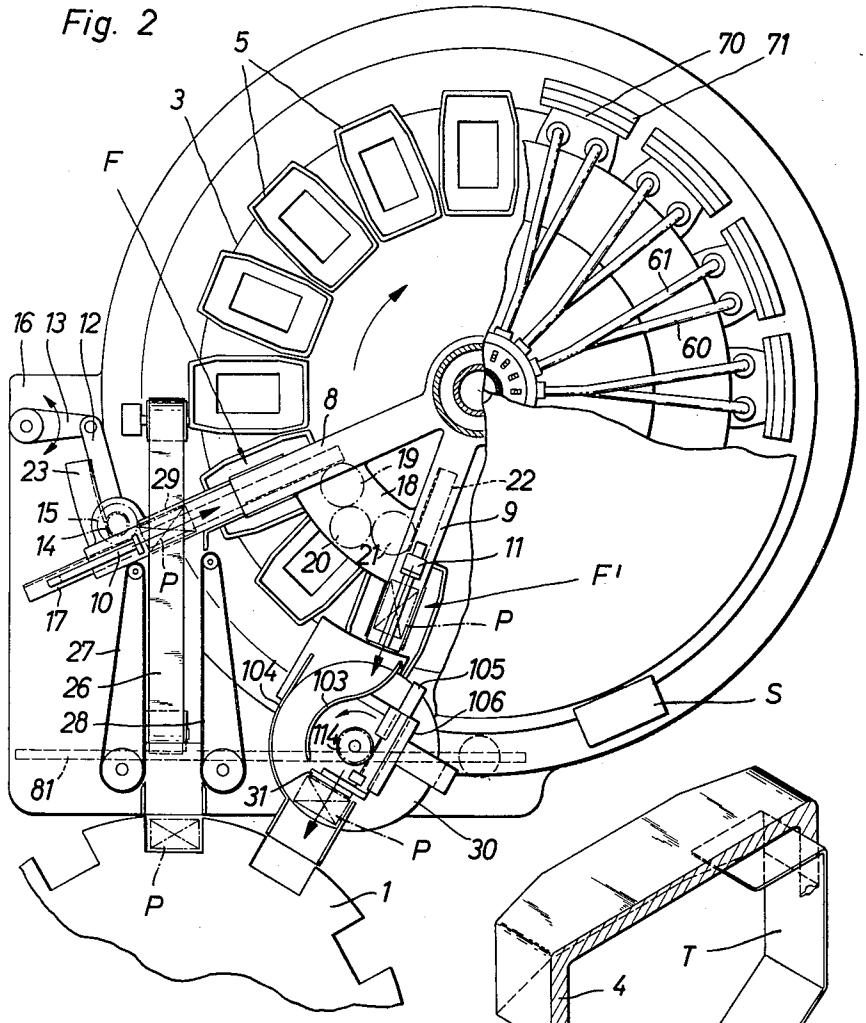

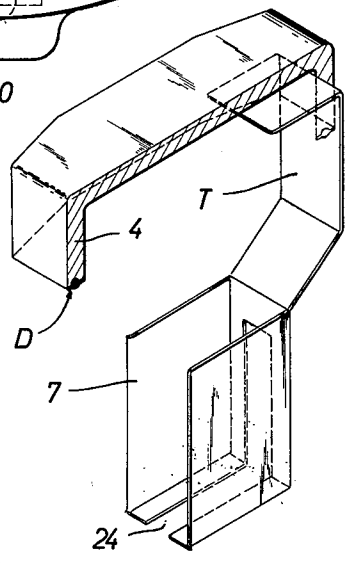

Fig. 3

Oct. 31, 1961 A. GRÄFINGHOLT 3,006,120

DEVICE FOR EVACUATING AND GAS-FILLING BAG PACKAGES

Filed May 12, 1960 4 Sheets-Sheet 3

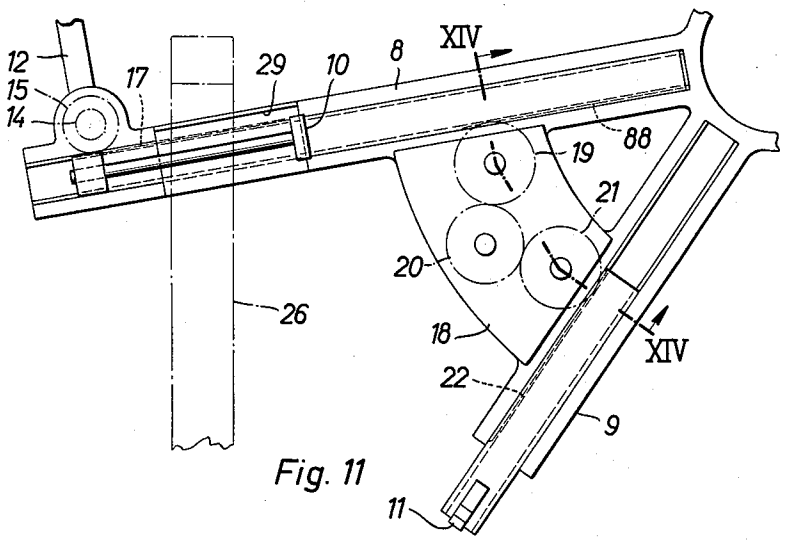

Fig. 11

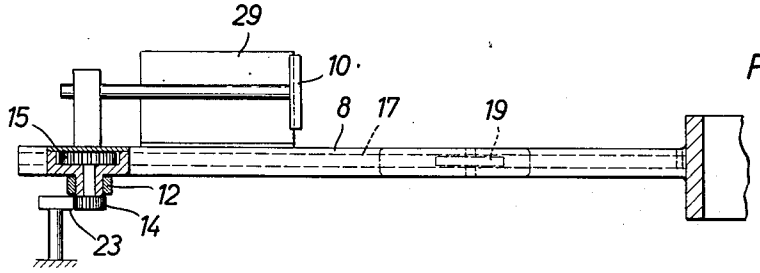

Fig. 12

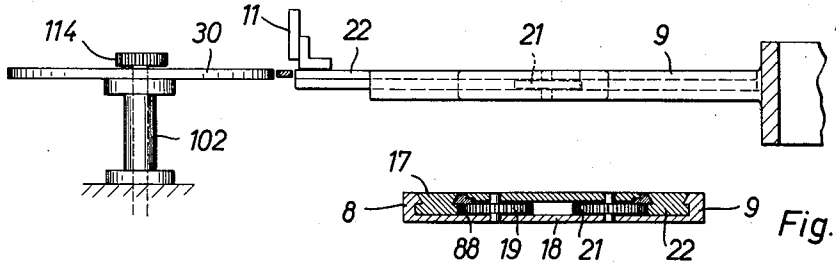

Fig. 13

Fig. 14

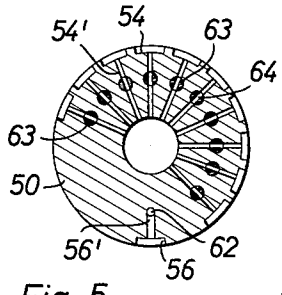

Fig. 5

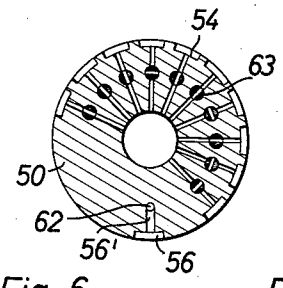

Fig. 6

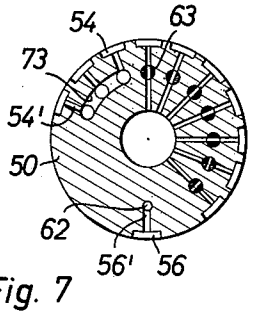

Fig. 7

Oct. 31, 1961 A. GRÄFINGHOLT 3,006,120

DEVICE FOR EVACUATING AND GAS-FILLING BAG PACKAGES

Filed May 12, 1960 4 Sheets-Sheet 4

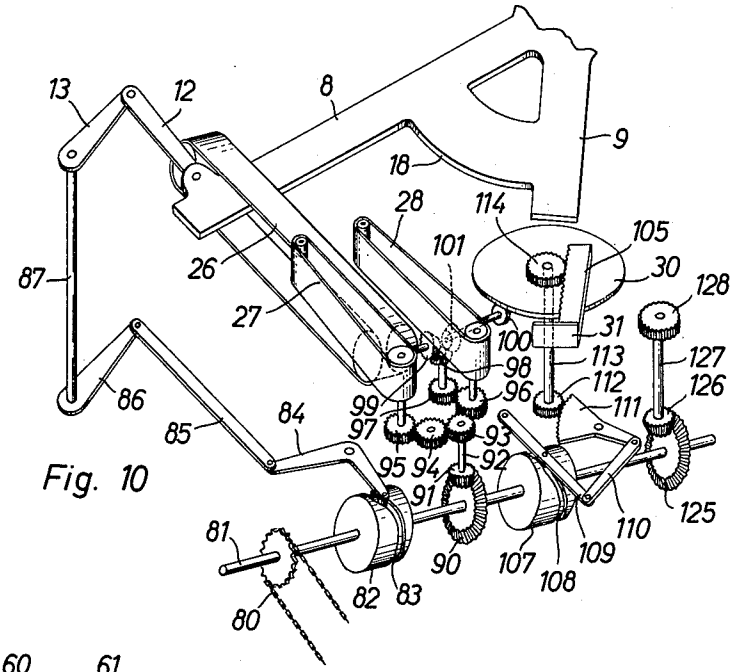

Fig. 10

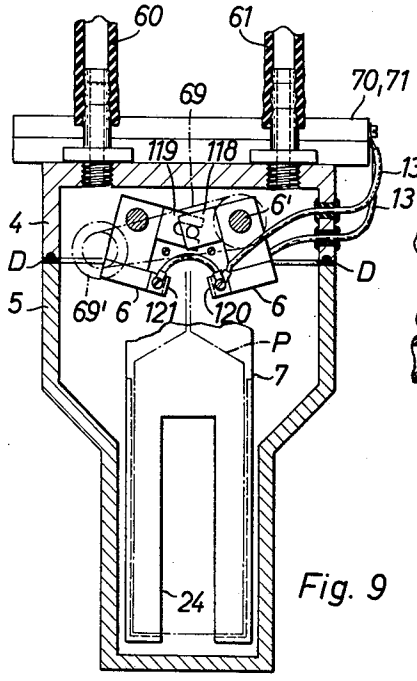

Fig. 9

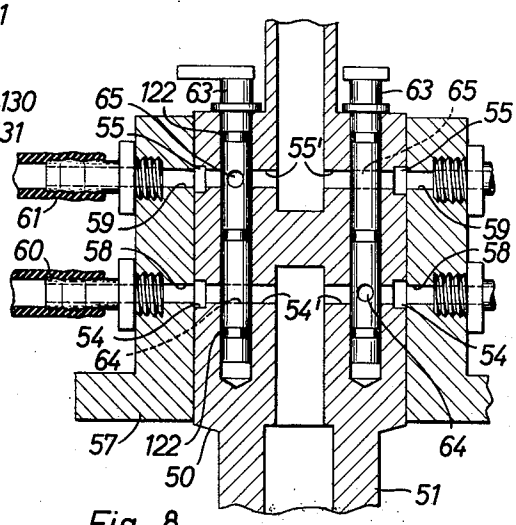

Fig. 8

United States Patent Office

3,006,120

Patented Oct. 31, 1961

3,006,120

DEVICE FOR EVACUATING AND GAS-FILLING BAG PACKAGES

Alfred Gräfingholt, Stuttgart-Bad Cannstatt, Germany, assignor to Firma Fr. Hesser, Maschinenfabrik-Aktiengesellschaft, Stuttgart-Bad Cannstatt, Germany, a corporation of Germany

Filed May 12, 1960, Ser. No. 28,727

Claims priority, application Germany May 20, 1959

6 Claims. (Cl. 53—95)

My invention relates to a device, adapted for use with a bag filling and closing machine, for evacuating bag packages and filling the same with gas.

Known devices of this type operate intermittently. They include a drum having chambers, which drum is indexed, the feeding in and carrying off of packages taking place while the drum is stationary. The packages, further are pushed from below into bell-shaped chambers and are moved down again after evacuation. This arrangement has the disadvantage that, because of the intermittent method of operation, the capacity is considerably limited and furthermore it is difficult to control accurately the correct insertion of the spread bag mouths between heat sealing bag-closure jaws, which are provided in the head of the bell.

The object of the invention is to obviate these disadvantages and to provide a device which insures an accurate insertion, which is at all times controllable, of the bag mouths between the said heat sealing jaws during constant rotation of the said chambers, even when the bag material possesses little inherent rigidity. For this purpose, according to the invention, the evacuating chambers, which are arranged on the periphery of a continuously rotating drum or the like, each consist of a head piece which is mounted in stationary relationship on the drum and provided with an annular sealing surface, and which has, in addition to a pair of pivotally-mounted heat sealing jaws, a package carrier suspended beneath the pair of jaws on the head piece and provided with a radial outwardly opening receptacle, and a bell which is arranged so that it can be lifted and lowered on the drum and which, when in operative position, overlaps the said package carrier and the sealing jaws and lies against the said sealing surface of the head piece, so forming a gastight chamber with the latter.

In order to adapt the feeding in and carrying off of the bag packages to and from the chambers to the requirements of the continuously rotating drum, according to a further feature of the invention, use is made of two conveyor devices, which are mounted so as to be pivotable about the central axis of the drum and are arranged to accompany the open chambers on a part of their journey and, during this period, to push each package into or out of the conveyor receptacles, as appropriate.

An evacuating and gas filling device of this construction enables the closure part of the package to be accurately and appropriately inserted between the sealing jaws even during the continuous rotation of the drum, and this operation can be supervised at all times from the exterior. In addition, the device can be readily installed in existing packaging machines, since, in this case, the filled packages are only taken out at one station of the conveyor device of the machine and may be moved back on to this conveyor device at the next station, after leaving the evacuating device.

One embodiment of the invention is illustrated, by way of example, in the drawings in which:

FIGURE 1 is a cross section through the device,

FIGURE 2 is a plan view of the device of FIGURE 1, partly in section,

FIGURE 3 shows the upper part of a chamber and a receptacle,

FIGURE 4 shows a sectional view of the control head for evacuation,

FIGURES 5 to 7 show further embodiments for the adjustment of the control head,

FIGURE 8 is a longitudinal sectional view of the control head according to FIGURE 4, at an enlarged scale,

FIGURE 9 is a sectional view of an evacuating chamber,

FIGURE 10 shows the driving parts of the device in perspective view,

FIGURE 11 is a plan view of conveyor devices for feeding and carrying off the bags,

FIGURE 12 shows the feeding device of FIGURE 11 in side elevation,

FIGURE 13 shows a side elevation of the carrying-off device according to FIGURE 11, and

FIGURE 14 is a sectional view taken on line XIV—XIV of FIGURE 11.

The illustrated embodiment of the evacuating apparatus is associated with a filling and closing machine, and receives the bag packages P, which are to be evacuated and if required are to be filled with a protective gas, from the closing wheel of the machine, indicated at 1 (FIG. 2). The mouths of the filled bag packages P, before the packages arrive at the evacuating apparatus, are spread flat in known fashion and, if necessary, tacked at the sides.

The bag packages P are evacuated, filled with gas, if appropriate, and closed in the chambers 2. In the present example, there are sixteen such chambers 2 arranged on a continuously rotating drum 3. The drum 3 receives its drive from a control shaft 81 (FIG. 10) which is continuously driven by the filling and closing machine through chain gearing 80. From the control shaft 81, the drive is transmitted through a pair of bevel gears 125, 126, a vertical shaft 127 and a pinion 128 which meshes with external teeth 129 provided on the drum 3.

Each of the chambers 2 consists of a head piece 4, firmly mounted on the upper side of the drum 3, and a bell 5 which may be lifted and lowered. In addition to a pair of pivotable heat sealing jaws 6, fastened in the head piece 4 is a package carrier T, which has a radial, outwardly opening conveyor receptacle 7 for receiving a package P.

The bag packages P are pushed one after the other into this conveyor receptacle 7 with the bell 5 lowered. For this purpose two conveyor devices F and F′ are mounted so as to be pivotable about the central axis of the drum 3. These conveyor devices comprise, in the present embodiment, arms 8, 9 (FIG. 11) which are connected together and in which are mounted slides 10, 11 which are movable in guideways. The arm 8 is coupled to a link 12 which, in its turn, receives a swinging motion from a lever 13, in such a way that the arms 8, 9, move with the chambers 2, for a predetermined period at the same angular velocity thereby enabling the conveyor receptacles 7 to be loaded and unloaded.

The swinging movement of the arms 8 and 9 is controlled by a cylindrical cam 82 (FIG. 10) which is mounted on the control shaft 81. The cam groove 83 of the cylindrical cam 82 imparts to a bell-crank lever 84 a periodic swinging movement which is then transferred, through the intermediary of a link 85, a swinging arm 86, and a shaft 87, to the lever 13.

Two connected toothed wheels 14, 15 are mounted on the outer end of the arm 8, the gear wheel 14 engaging a toothed segment 23 fastened on the machine frame 16. The other toothed wheel 15 meshes with a rack bar 17, to which is attached the slider 10, which guides the bar in the arm 9. Teeth 88 (FIG. 14) are also provided at the other end of the rack bar 17 on the side which is turned towards the arm 8 and a toothed wheel 19, which

is arranged in the web 18 which connects the arms 8 and 9, engages these teeth.

This toothed wheel transmits the rotation through further toothed wheels 20, 21, to a rack bar 22 which is mounted in the arm 9 and is connected with the slider 11. The slider 10 is moved towards a conveyor receptacle 7 by these transmission elements, during the time that the arms 8, 9 move with the drum, due to the rolling of the toothed wheel 14 on the toothed segment 23, and simultaneously the slider 11 moves through a slot 24 in a conveyor receptacle 7. These movements cause one conveyor receptacle to be loaded and a second conveyor receptacle to be unloaded simultaneously. When the arms 8, 9 return to their starting positions the sliders 10, 11 do the same. The return movement of the slider 11 does not take place through the slot 24 of the conveyor receptacle 7, but is effected between the latter and the next following receptacle.

The packages P are fed into the slider 10 from the closing wheel of the filling and closing machine by a horizontal conveyor belt 26 and two conveyor belts 27, 28, which bear against the narrow sides of the packages and which circulate around vertical axes. The packages P are fed towards an abutment 29, fastened on the arm 8, by means of these conveyor devices and there stop with their narrow sides facing the slider 10.

The drive for the conveyor belts 26, 27, 28 is derived from shaft 81 through a pair of bevel gears 90, 91 (FIG. 10). The one bevel gear 91 drives through a vertical shaft 92 a spur gear 93 which, on the one hand, drives the conveyor belt 27 through toothed wheels 94, 95, and, on the other hand, drives the conveyor belt 28 through the intermediary of a toothed wheel 96. Also in mesh with the toothed wheel 96 is another toothed wheel 97 which is fast with a bevel gear 98 and drives the conveyor belt 26 through another bevel bear 99.

The bag packages, which have been closed in the evacuating apparatus so as to be gastight, are fed back to the closing wheel 1, after their ejection from the conveyor receptacles 7, for further folding in of the closure, by means of a continuously rotating disc 30, which turns the packages through an angle of about 90° and simultaneously transfers them to a further slider 31.

The disc 30 is rotatably mounted on a suitable bearing, and is driven by a friction wheel 100 (FIG. 10) which is fast with a bevel gear 101 meshing with bevel gear 98. The packages P deposited on the disc 30 by the conveyor device F' are transported by said disc, between two stationary guide plates 103, 104, in front of the slider 31 which then brings them back into the closing wheel 1. The slider 31 is fixed on a rack 105 which is slidably mounted in a straight guidway 106. The movement of slider 31 is controlled by a cylindrical cam 107 mounted on the control shaft 81. The cam groove 108 of cylindrical cam 107 imparts to a lever 109 a swinging movement which is transferred by a link 110 to a toothed segment 111. This segment is in mesh with a toothed wheel 112 connected to a vertical shaft 113 which is mounted, concentrically with the disc 30, in a bracket 102. The vertical shaft 113 carries on its upper end a toothed wheel 114 which meshes with the rack 105 of slider 31.

After a package P has been brought into the conveyor receptacle 7, the corresponding bell 5 is lifted up until it bears against a sealing surface of the head-piece. In this position the bell forms a gastight chamber with the head-piece 4. The bells 5 are raised and lowered by pneumatically-operated cylinder units 33, which are controled by a fixed control head 34 provided with control slots 38, 39. Rotataing with the drum 3 around this control head 34 is a sleeve 35, to which the compressed air lines 36, 37 to the cylinder units 33 are connected, and whose connecting passages 40, 41 come into register with the control slots 38, 39. corresponding to the raising and lowering of the bells 5.

Lines 48, 49 connected with a source of compressed air are provided for supplying compressed air to the control head 34.

The bells 5 are so controled that they are raised after the insertion of a package P into a conveyor receptacle 7, and are pressed against the sealing surface O until, after the evacuating and gas filling operation, the closure of the package P has been sealed by the heat sealing jaws 6. Following this operation the bells 5 are lowered again so that the conveyor receptacle 7 may be unloaded.

To enable the bells 5 to be moved in without difficulty during their raising and lowering, guide rods 43, 44 passing through holes in the drum 3, are attached to the plates 42, to which the bells are replaceably fastened.

The air is drawn off from the packages which are in the chambers 2 and they are subsequently filled with a protective gas under the control of a control head 50 positioned above the drum 3. This control head is attached to a central pipe 51, which is connected with the machine frame 16 through supports 52 and on which the control head 34 for raising and lowering the bells 5 also rests. The control head 50 is connected by the pipe 51 with the suction plant (not shown) and by a further line 53 with a filling gas plant.

The control head 50 has a plurality of slots 54, 55, 56 at two superimposed levels on its periphery, said slots being connected through radial ducts 54', 55', 56' with the suction and filling gas lines. A sleeve 57 fastened to the drum 3 rotates around the control head 50 and has radial holes 58, 59 which come successively into register with the slots 54, 55, 56 so that the chambers are evacuated and are filled with gas through further lines 60, 61, connected to the head pieces 4 of the chambers 2. The slot 56 is connected to a hole 62 which opens to atmosphere. The effect of this is that air passes into the chambers 2, after the closing of the packages P and shortly before the descent of the bells 5, and this allows the bells 5 to fall.

To allow a predetermined evacuating and gas filling program to be set up for the chambers 2, the radial ducts in the control head 50 are provided with rotary valves 63. These valves 63 have two transverse bores 64, 65 at the level of the radial ducts, these being offset relative to each other by 90°. According to the position of each valve 63 one bore such as, for example, the one connected to the suction line is open, while the other, connected to the filling gas line, is closed. The chambers 2 can be selectively controlled by a corresponding adjustment of the valves 63, so as to be evacuated and filled with gas (FIG. 5), or only evacuated (FIG. 6), one or more times in succession. With a repeated alternation between a vacuum and protective gas there is the advantage that only the smallest amounts of oxygen remain in the packages P.

Evacuation of the packages may also be accomplished in two stages. For this purpose, for example, the first three rotary valves 63 adapted to be used for evacuating purposes are removed, and the corresponding radial bores 54' do not extend right through to the suction line (FIG. 7). Instead, the first three bores of the rotary valves are interconnected by a conduit 73 which is connected to a suction plant for the pre-evacuation.

In order to prevent any exchange of air and gas, respectively, within the rotary valves 63, the latter are formed with several annular grooves in which are provided sealing rings 122.

Before the chambers 2 are reopened after a set cycle of operation, the packages are closed inside the chambers in known fashion by heat sealing. The heat sealing jaws 6, which are normally parted, are moved towards each other so that they press the bag mouth together and heat seal it.

The operation of the heat sealing jaws 6 is initiated by an electromagnet 66 or the like, which pushes upwards a bar 68 which is suspended from a parallelogram linkage

67. Thereby, a pivotal movement is imparted to a lever 69 which outside the head-piece 4 of each chamber 2 is fixedly mounted on a shaft 6' of a heat sealing jaw 6, and on its free end carries a roller 69' which is in engagement with the bar 68. This pivotal movement of the one heat sealing jaw is transferred to the other jaw by means of a finger 118 and a yoke 119 embracing said finger, so that both heat sealing jaws are swung against each other thereby gripping and pressing the mouth of the bag between them.

In the present embodiment, the packages P are conveyed so that they stand with the longitudinal direction of their closure in radial alignment to the axis of rotation of the drum 3. This has the advantage that only a relatively small opening out of the heat sealing jaws is necessary to positively bring the bag mouth, folded flat, between both heat sealing jaws 6 when the packages P are inserted into the conveyor receptacle 7. Further, this enables more chambers to be arranged on the drum than can be used in a drum of the same diameter in an arrangement having the heat sealing jaws tangential to the direction of rotation.

Current collector plates 70, 71 are arranged on the head-pieces 4 of the chamber 2 to heat the sealing jaws 6, and in the present example operate by means of impulse heating, said contact plates receiving current impulses from a transformer 72, which is not shown in detail, as they pass through the heat sealing station S.

From the current collector plates 70, 71, electric leads 130, 131 extend through the head-piece 4 to the heat sealing jaws 6 on the pressing side of which are mounted heating strips 120, 121 which are heated only for the duration of the current impulse, thereby sealing the mouth of the bag in a gas-tight manner.

What I claim is:

1. A package processing device comprising means provided with a plurality of chambers, a continuously rotatable rotor supporting said means, the chambers being arranged to receive successive packages, head-pieces on the rotor and operatively associated with the chambers, a pair of pivotable heat sealing jaws for each chamber, the jaws being mounted on the rotor and radially disposed with respect thereto, a package carrier fastened to each head-piece and provided with a radial, outwardly opening package receiving receptacle adapted for guiding each package received into position relative to said jaws, a bell-like part shiftably mounted on said rotor for each chamber, and means adapted to lower and raise said bell relatively to said head-piece, the bell, in its operating position, closing said head-piece.

2. A device as claimed in claim 1, comprising in combination two conveyor means pivotable about said rotor at the level of the said package receiving receptacles of the

package carriers, driving means adapted to swing the conveyor means around the said rotor, means operatively disposed with respect to one of said conveyor means to feed packages to the said package receiving receptacles of the package carriers, and means operatively disposed with respect to the other conveyor means to withdraw packages from the package receiving receptacles, and means to control the two conveyor means so that they periodically accompany the said receptacles for a part of their travel with an oscillating motion and such that the conveyor means are simultaneously in register with two of the said receptacles of the package carriers.

3. A device as claimed in claim 2, in which the conveyor means comprise two interconnected arms and include sliders and displaceable rack bars connected to said sliders, and means comprising a fixed toothed segment and intermediate toothed wheels in mesh with the said rack bars of the sliders, the latter said means operating to derive movement of the sliders from the swinging motion of the two arms.

4. A device as claimed in claim 2, including further means for introducing packages to the conveyor means for feeding packages to the package receiving receptacles of the package carriers, said further means including a conveyor belt arranged at an angle to the latter said conveyor means and two lateral conveyor belts bearing against two opposite sides of the packages on said conveyor belt.

5. A device as claimed in claim 2, comprising a rotary disc operatively disposed with respect to the conveyor means for carrying off the packages from the receiving receptacles of the package carriers, and means operating said disc to bring packages thereon into a predetermined position for being carried away from the device.

6. A device as claimed in claim 1, comprising a control head including a rotary control valve having two superimposed rows of control ducts and control slots, corresponding in number to the chambers, and of which one row is adapted to be connected with a suction air line and the other row with a filling gas line, said control head further including a plurality of rotary valves, corresponding in number to the chambers, each latter said valve operating on two superimposed ducts and being independently adjustable, the control slots which are associated with said superimposed ducts being offset relatively by 90°.

References Cited in the file of this patent

UNITED STATES PATENTS

1,874,854	Bardet et al.	Aug. 30, 1932
2,235,394	Berch	Mar. 18, 1941
2,630,955	Moses et al.	Mar. 10, 1953