June 30, 1959 H. A. OSGOOD, JR., ET AL 2,892,629

SHEET FEEDING DEVICE

Filed Oct. 23, 1957 3 Sheets-Sheet 1

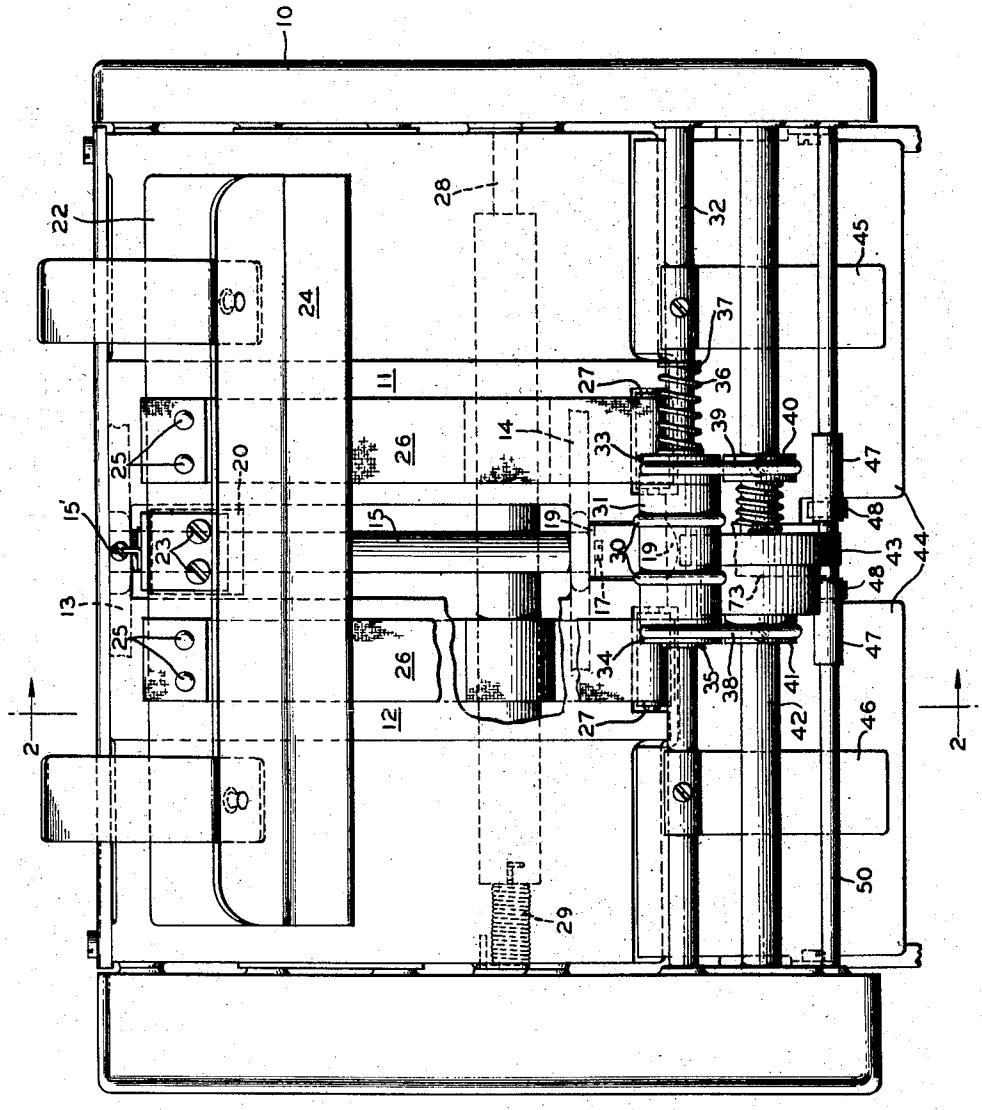

FIG. 1

INVENTOR
HAROLD A. OSGOOD, JR.
JOSEPH C. PILCHER
BY Clyde A. Norton and
Robert J. Hulsizer
ATTORNEY

June 30, 1959 H. A. OSGOOD, JR., ET AL 2,892,629

SHEET FEEDING DEVICE

Filed Oct. 23, 1957 3 Sheets-Sheet 2

FIG. 2

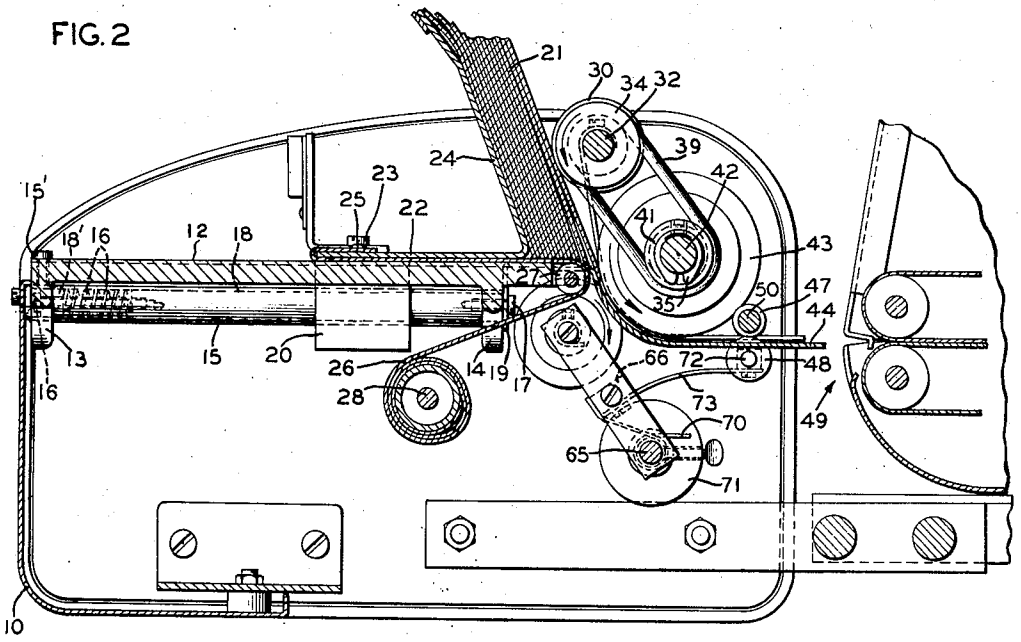

FIG. 3

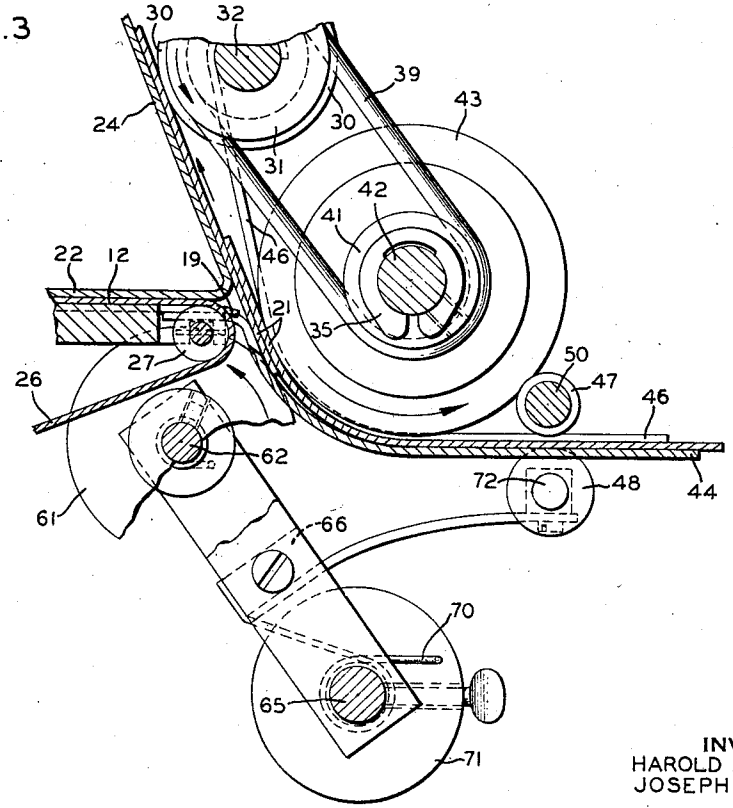

INVENTOR
HAROLD A. OSGOOD, JR.
JOSEPH C. PILCHER
BY Clyde A. Norton and Robert J. Hulsizer
ATTORNEY

June 30, 1959 H. A. OSGOOD, JR., ET AL 2,892,629

SHEET FEEDING DEVICE

Filed Oct. 23, 1957 3 Sheets-Sheet 3

FIG.4

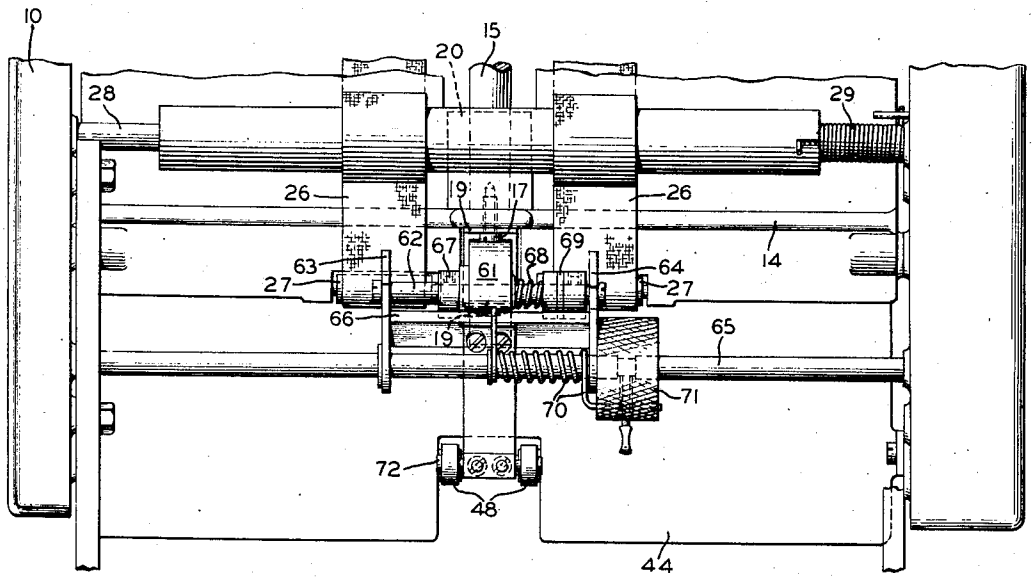

FIG.5

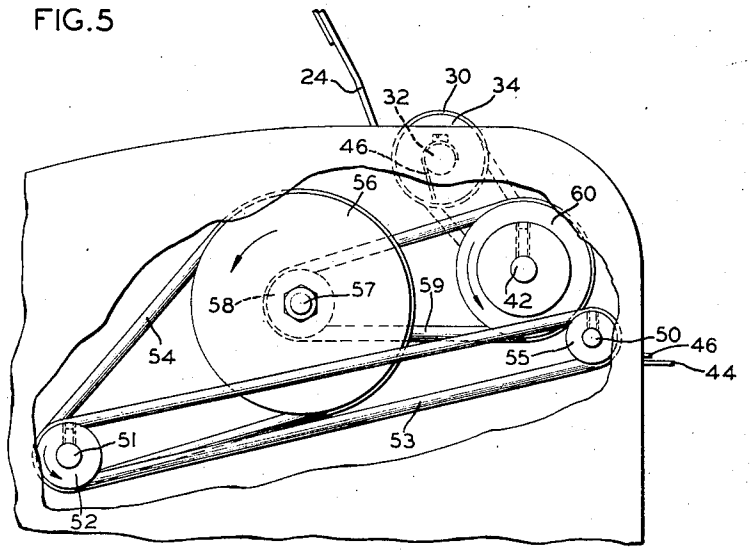

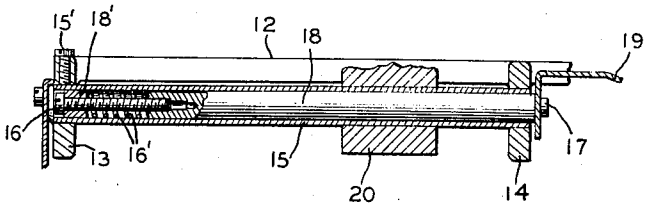

INVENTOR
HAROLD A. OSGOOD, JR.
JOSEPH C. PILCHER
BY Clyde A. Norton and Robert J. Hulsizer.
ATTORNEYS.

United States Patent Office

2,892,629

Patented June 30, 1959

2,892,629

SHEET FEEDING DEVICE

Harold A. Osgood, Jr., and Joseph C. Pilcher, Norwalk, Conn., assignors to Sperry Rand Corporation, New York, N.Y., a corporation of Delaware

Application October 23, 1957, Serial No. 691,942

4 Claims. (Cl. 271—39)

This invention relates to new and useful improvements in sheet feeding devices and has particular reference to a simple and efficient device for feeding sheets, one at a time, to a device, such as micro-film camera where the sheets or documents are to be photographed.

The main object of the device is to provide a simple, efficient and economical device which can be detachably associated with a micro-film camera or similar machine for feeding documents, sheets or cards to the camera and containing simple and effective means to prevent more than one sheet at a time being fed to the camera or other device.

Another object of the invention is to so support and move the sheets that there is no tendency of the sheets to be flexed or moved out of proper alinement so that they may be fed to the feed rollers in perfect relation thereto.

In brief and general terms, the device is adapted to operate on a stack of cards, sheets or documents disposed on edge on tapes and urged forward by a spring-operated carrier plate to advance the forward sheet against an initial feed roller which passes the sheet down so that its lower edge is grasped between two main rollers. It often happens that more than one sheet starts to pass between these two rollers and, it is to prevent this from happening that the invention herein was developed.

Of the two rollers between which the sheets pass, the one which contacts the front face of the sheet is positively driven but the other is a retard roller which contacts the rear face of the sheets and is not positively driven but is freely rotatable on a shaft and spring-urged to turn in a direction opposite to that of the downward motion of the sheets. This spring-biased roller is mounted on a bracket which is pivoted and spring-urged to press the biased roller against the positively driven roller. When only one sheet is passing between these two rollers, then the friction is such as to cause the biased roller to roll in the direction of motion of the sheet and its biasing spring will wind up around its shaft since it is a coiled spring. One end of this spring is connected to a friction clutch member so that after the spring is tightened up beyond a desired amount the clutch will slip. However, when two sheets are disposed between these two rollers, the first sheet bearing against the positively driven roller will be advanced, while the second sheet to the rear of the first sheet will be opposed by the bias of the spring connected to the second or retard roller sufficiently to overcome the surface friction between the two sheets so as to hold the second sheet back until the first one has passed beyond the two rollers. This action takes place automatically and the only adjustment required is to adjust the pressure with which the retard roller bears against the positively driven roller.

It is known to provide positively driven retard rollers and to provide fixed retard rollers which swing on their supports to oppose the advance of second sheets but as far as is known the art does not show a simple freely

rotatable retard roller biased by a coiled spring to resist the forward movement of second sheets in the manner above mentioned.

Another feature of the invention is to support the sheets inclined edgewise on moving tapes so that the sheets move with the tapes and are not detrimentally affected by friction with any surface along which they might move. Hitherto, especially with thin paper sheets the edgewise friction between the lower edges of the sheets and the surface along which they were moved would cause them to be flexed out of proper alinement which would affect their proper introduction to the feed rollers.

A present preferred embodiment of the invention is illustrated in the drawings, of which

Fig. 1 is a plan view of the device with the cover removed;

Fig. 2 is a vertical front to rear section taken on the line 2 of Fig. 1;

Fig. 3 is a vertical enlarged section of a portion of the mechanism shown in Fig. 2;

Fig. 4 is an inverted plan view of the device;

Fig. 5 is a somewhat schematic view of the drive mechanism; and

Fig. 6 is an enlarged partial sectional view of the means for supporting and adjusting the gate blade.

Referring now to the particular form of the invention shown in the drawings, the mechanism is enclosed in a casing **10** with an open top. A casting is horizontally disposed within the casing below the top thereof and has spaced side platforms **11** and **12** connected by cross ribs **13** and **14** at the front and rear thereof. A hollow shaft **15** extends between these ribs and is positioned in center casting locked in place by a set screw **15'**.

Disposed within the shaft **15** (Fig. 6) is a rod **18** one end of which extends beyond the open end of the shaft **15** and supports an L-shaped gate blade **19** connected thereto by a screw **17**. The forward edge of this blade to act as a guide to determine an opening through which cards pass from the tapes and between the gate and a feed roller later to be described. The other end of the shaft **15** is fitted with a plug **18'** apertured to receive a long screw **16** which extends into a threaded opening in the adjacent end of the rod **18**. A spring **16'** is disposed between said plug and the adjacent end of the rod. The turning of the screw **16** will move the rod **18** forward or backward to determine the opening between the blade and the feed roller. The spring **16'** will tend to hold the rod in any adjusted position.

Surrounding the shaft **15** is a bushing **20** which slides thereon. The top surface of this bushing is flat and to it is fixed a carrier plate for the cards **21** which plate has a horizontal portion **22** connected to the bushing **20** by screws **23**. The outer ends of this horizontal portion **22** ride over the upper surface of the platforms **11** and **12**. The portion **22** has at one edge an upwardly and rearwardly extending pusher plate **24** and against this portion **24** the cards **21** rests with their lower edges resting on the tapes **26** and slightly above the flat forms **11** and **12**.

With the cards or sheets **21** stacked against the carrier plate as shown in Fig. 3 this plate is urged forward to press the first card against a pressure roller later described. The horizontal portion **22** of the carrier is connected by screws **25** to one end of tapes **26** which are spaced apart and extend forwardly to pass over small rollers **27** and then proceed to and are wrapped around a shaft **28** which is supported between the side walls of the casing and is urged by a spring **29** to exert a constant pull on the tapes so as to continually tend to carry the sheets forwardly.

The sheets or cards **21** are engaged at about their mid-height by rubber rings **30** on a roller **31** which is

freely rotatable on a fixed shaft 32 supported between the side walls of the casing. Abutting opposite ends of the roller 31 on the shaft 32 are pulleys 33 and 34. A key 35 on shaft 32 abuts the outer face of the pulley 34 to prevent longitudinal movement of it on shaft 32. A spring 36 at one end bears against the outer face of the pulley 33 and at the other end bears against a collar 37 fixed to the shaft 32. This arrangement will cause the roller to be rotated with a slip arrangement to turn it without it being positively driven. The pulleys 33 and 34 are connected by belts 38 and 39 to pulleys 40 and 41 respectively fixed to shaft 42. This shaft extends between the side plates of the casing and is rotated by means later described.

On this shaft 42 is disposed a pressure roller 43 adapted to contact the front face of the sheets 21 as they are moved downwardly by the initial feed roller 31 through the intermediary of the O-rings 30 above mentioned. The previously mentioned gate element 19 is so spaced from the adjacent face of the roller 43 that normally just one sheet or card may pass between it and the roller 43. A curved guide plate 44 is suitably supported from a point adjacent the gate element 19 and around beneath the roller 43 to act as a guide plate to support the sheets as they pass around said roller. There are similarly curved spaced spring strips 45 and 46 affixed at one end to the shaft 32 and are curved down and around parallel to and above the plate 44 to act as upper guide members. As the cards pass around the roller 43 they are guided forward between driven rollers 47 and idler bearing rollers 48. The rollers 47 are driven as later described at a higher speed so that as the sheets leave the pressure roller 43 they are urged forward more rapidly between the guide elements 44 and 45 to the entrance of the camera or other device with which the feeding device is associated and which is generally indicated by the numeral 49 in Fig. 2. The rollers 47 are fixed to shaft 50 which extends between the side walls of the casing.

The means whereby the various shafts are driven is shown somewhat schematically in Fig. 5. There is a shaft 51 driven by a motor (not shown) and carrying a pulley 52 over which extend two belts 53 and 54. The belt 53 extends to and around a pulley 55 on shaft 50 to drive the rollers 47, above described. The belt 54 extends to and around a much larger pulley 56 rotatable on a stub shaft 57 and connected thereto is a smaller pulley 58 over which passes a belt 59 which extends to and around a pulley 60 fixed to shaft 42 above mentioned. This arrangement of pulleys and belts comprises a reduction drive between the motor shaft 51 and the shaft 42 of the roller 43 and at the same time a direct drive at much higher speed of the rollers 47 to pull the sheets away from the feed rollers into the device 49 which may be a micro-film camera.

The main feature of the device which comprises the invention concerns the means for preventing more than one sheet at a time from passing between the rollers. To this end the pressure roller 43 has associated therewith a retard roller 61 which is freely rotatable on a stub shaft 62 extending between spaced bracket plates 63 and 64 which are pivotally supported on cross rod 65 extending between the side walls of the casing. A cross bar 66 extends between the plates 63 and 64 at points intermediate to their ends. The roller 61 is held from lateral motion on the shaft 62 by a stop collar 67 (Fig. 4) and on its other face bears a coiled spring 68 the other end of which is related to a friction clutch device indicated by the numeral 69.

A coiled spring 70 is wrapped around the cross rod 65 and one end thereof is connected to a knob 71 adjustable on the cross rod by a set screw and the other end of this spring is connected back of the cross bar 66. This arrangement will tend to pivot the bracket plates 63 and 64 around the cross rod 65 to press the roller 61 against the roller 43 with a greater or lesser pressure as desired. The spring 68 round the stub shaft 62 tends at all times to urge the roller 61 in a direction to oppose the downward movement of the sheets past the roller 43.

The bearing rollers 48 are on a rod 72 which is supported on a flat spring plate 73 the other end of which is connected to the cross bar 66 above mentioned. This mounting will tend to press the bearing rollers 48 upward into contact with the high speed rollers 47 above mentioned.

From the mechanical description of the structure given above, the operation of the device should be clear. When the sheets in the form of cards or other documents are disposed edgewise on the tapes and against the carrier plate they are urged and carried forward by the action of the spring on the tapes which are connected to said plate so that the first card of the stack presses against the driven roller 31 and is fed down to be engaged by the positively driven roller 43. If only one sheet is thus fed, the opposite face thereof is engaged by the spring-biased retard roller 61 and the friction between the sheet and the roller 43 is sufficient to overcome the retarding action of the roller 61. In this instance the roller 61 is turned clockwise against the action of its biasing spring which is then wound up around the shaft. The slip clutch associated with this shaft and the biasing spring will come into play when the spring is wound up beyond a certain amount.

When two sheets perchance pass between the rollers 43 and 61 then the friction between these two sheets is much less and the biasing spring comes into play to turn the roller 61 counter-clockwise and hold back the second sheet until the first sheet has passed beyond the roller 43. This action takes place automatically without any action on the part of the operator except to place the cards in a stack and to adjust the knob 71 to set the tension of the spring 70 so that the pressure of the roller 61 against the roller 43 may be determined in advance. Presumably this advance adjustment will be required in accordance with the character of the sheets being fed through the machine.

While we have described what I consider to be a highly desirable embodiment of our invention, it is obvious that many changes in form could be made without departing from the invention, and we, therefore, do not limit ourselves to the exact form herein shown and described, nor to anything less than the whole of our invention as hereinbefore set forth, and as hereinafter claimed.

What we claim as our invention, is:

1. A sheet feeding device which comprises a platform, a carrier member to move thereover, an upwardly extending plate on said carrier member against which sheets are stacked in a substantially vertical position, tapes connected to said carrier and spring-urged to move said carrier member forwardly, said sheets resting on said tapes with their lower edges slightly above the surface of the platform, a roller at one end of the platform and toward which the sheets are advanced, means to drive the roller to advance the sheets downwardly, a second feed roller below the first mentioned feed roller to which the sheet is advanced, the second feed roller being positively driven to advance the sheet, and a retard roller adjacent the second feed roller and adapted to press against the rear surface of the sheet passing the second feed roller, said retard roller being freely rotatable on a shaft, and means connected to the retard roller tending constantly to turn it in opposition to the advance of the sheet.

2. The invention of claim 1 in which there is a coiled spring connected to the retard roller at one end and to the supporting shaft at the other end tending to turn the retard roller in opposition to the advancing sheet.

3. The invention of claim 1 in which there is a coiled spring connected to the retard roller at one end and to the supporting shaft at the other and tending to turn the retard roller in opposition to the advancing sheet, and a slip clutch between the supporting shaft and the adjacent end of said coiled spring.

4. The invention of claim 1 in which there is a coiled spring connected to the retard roller at one end and to the supporting shaft at the other and tending to turn the retard roller in opposition to the advancing sheet, a slip clutch between the supporting shaft and the adjacent end of said coiled spring, a pivoted bracket on which said supporting shaft is mounted to permit movement of the retard roller against the positively driven adjacent feed roller,

and an adjustable spring means acting on the bracket to vary the pressure between the two rollers.

References Cited in the file of this patent

UNITED STATES PATENTS

667,394	Ielfield	Feb. 5, 1901
1,085,781	Allen	Feb. 3, 1914
2,036,919	Calmes	Apr. 7, 1936