Aug. 9, 1932. R. F. MALLINA 1,870,417

DIAPHRAGM

Filed Jan. 15, 1929

Fig. 1.

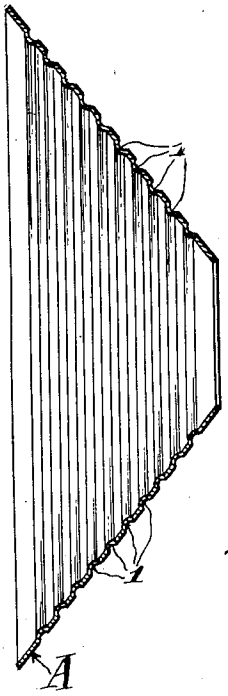

Fig. 2.

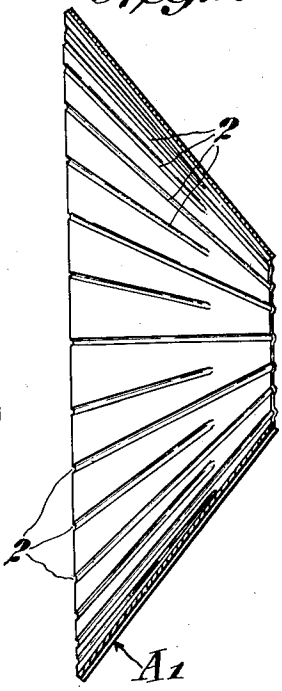

Fig. 3.

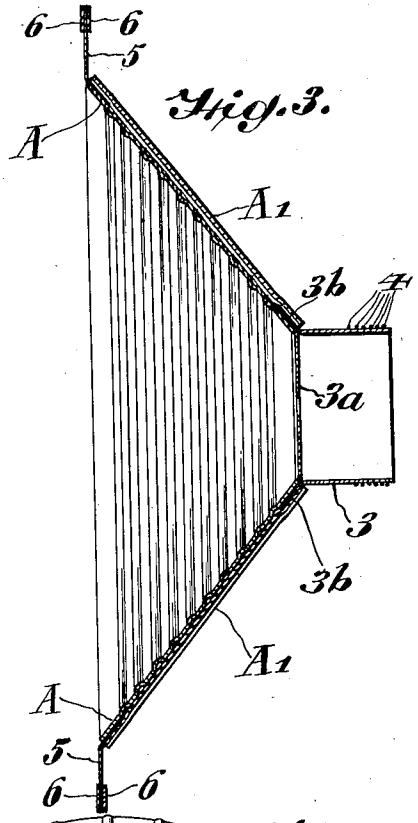

Fig. 4.

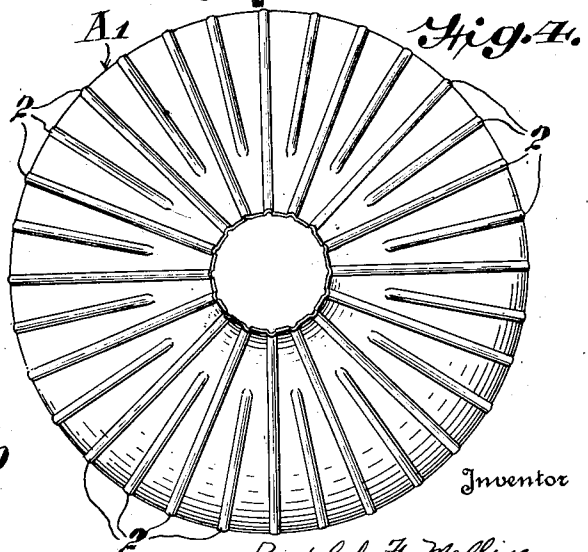

Fig. 5.

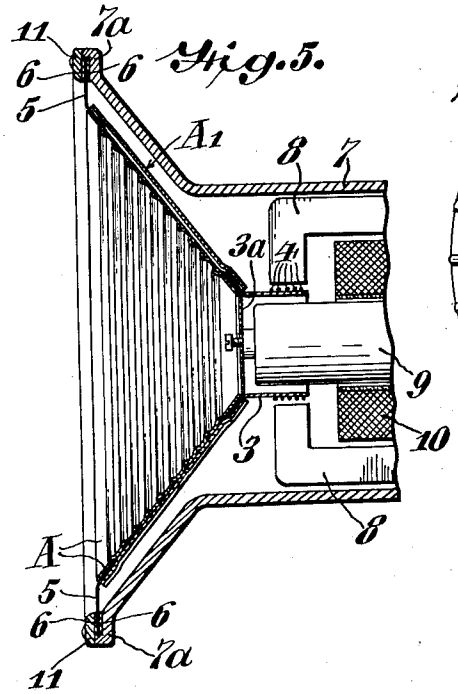

Inventor

Rudolph F. Mallina,

By Lyman D. Oberlin

his Attorney

Patented Aug. 9, 1932

1,870,417

UNITED STATES PATENT OFFICE

RUDOLPH F. MALLINA, OF ATLANTIC CITY, NEW JERSEY, ASSIGNOR, BY MESNE ASSIGNMENTS, TO RADIO CORPORATION OF AMERICA, OF NEW YORK, N. Y., A CORPORATION OF DELAWARE

DIAPHRAGM

Application filed January 15, 1929. Serial No. 332,737.

My invention relates to a diaphragm of any desirable or suitable size, shape or configuration and utilizable particularly for sound reproducing purposes; my invention also relates to a method of constructing or forming a diaphragm.

In accordance with my invention, a diaphragm, as aforesaid, is provided with integral corrugations extending in different directions and, more particularly, said corrugations are disposed or arranged in cross-wise relation.

Further in accordance with my invention, a diaphragm, as aforesaid, has or comprises a group of integral corrugations extending in one direction and another group of corrugations extending in another direction such, for example, as substantially at right angles to said one direction.

Further in accordance with one specific form of my invention, a diaphragm, when completed or assembled, partakes of or has the configuration of a frustum of a hollow geometrical figure, as a hemisphere, pyramid or, and usually, a cone, the completed diaphragm ordinarily having circumferentially complete, integral corrugations and linear, integral corrugations distributed thereon in cross-wise relation.

Further in accordance with my invention, a shaped, corrugated diaphragm-forming section or structure having a desired configuration is disposed within and suitably attached to a similarly shaped structure to thereby produce a composite diaphragm, one of said shaped structures, ordinarily, having circumferentially complete corrugations distributed thereon and another of said shaped structures, ordinarily, having linear corrugations distributed thereon.

My invention resides in the novel diaphragm and in the diaphragm assembling or producing method of the character hereinafter described and claimed.

For an illustration of one of the forms my diaphragm may take and for an understanding of my method, reference is to be had to the accompanying drawing, in which:

Figure 1 is a vertical sectional view of a shaped structure or section destined to form a part of a diaphragm.

Fig. 2 is a vertical sectional view of a complemental diaphragm-forming structure or section.

Fig. 3 is a vertical sectional view of the assembled diaphragm.

Fig. 4 is an elevational view of the section or structure shown in Fig. 2.

Fig. 5 is a vertical sectional view, partly in elevation, of an assembled diaphragm and actuating magnetic mechanism therefor.

Diaphragms of the prior art and particularly those known as the "cone type" are customarily constructed of light weight material which has a tendency to and often does vibrate in local regions to thereby cause distortion or other unnaturalness of the propagated sound waves. In general, my invention comprehends a diaphragm, so corrugated or otherwise strengthened, that it is largely or substantially entirely insensible to such formation of vibrations in local regions thereof. With such a diaphragm, the faithfulness of the sound reproduction is enhanced or increased to a degree not now existing in the prior art arrangements.

For one specific form of diaphragm which may be constructed in accordance with my invention, reference is to be had to the drawing and particularly Figs. 1 and 2 which show complemental structures or sections destined to form a single diaphragm. As shown, the structure or section A of Fig. 1 is a substantial replica of the structure or section A1 of Fig. 2 with the exception that the two sections are differently corrugated and that the diametrical dimensions of the section A are smaller than those of section A1.

In the example shown, both of the diaphragm-forming sections A and A1 are frustro-conical and hollow, the section A having or comprising, preferably, a plurality of circular, circumferentially complete corrugations 1 spaced from one another and the section, A1 usually, having a plurality of linear corrugations spaced from one another and angularly disposed with respect to the circular corrugations 1. The corrugations 1 extend well toward each end of the section A

and the corrugations 2 may extend throughout the entire length of the section A1. However, to prevent undue crowding, it is desirable that alternate corrugations 2 be shortened as indicated in Fig. 2.

Referring to Fig. 3, the section A is shown as disposed within the section A1 and in this position the two sections are suitably attached or secured together so that, in effect, they form an integral vibratory structure. For thus securing the sections A and A1 together there may be utilized any suitable cement, as one having a celluloid base, shellac, glue, or the like.

As shown in Fig. 3, the composite or assembled diaphragm carries or has secured thereto various parts by which it may be incorporated in the magnetic and casing structure of diaphragm-actuating device or apparatus of a type well known to the art. As shown, the assembled diaphragm, at its smaller end carries a supporting member 3 of suitable insulating material, as stiff paper, upon which is disposed a coil 4 comprising a plurality of convolutions of a suitable conductor traversed by current which has been modulated or which varies in accordance with the sound to be reproduced. The support 3 is cylindrical, hollow and usually comprises a transverse web or member 3*a* from which angularly extends a flange 3*b*, the latter being disposed between the sections A and A1 and being firmly and securely held in the position illustrated in Fig. 3 after the aforesaid glue, cement, or the like, has hardened or set. At the opposite or larger end of the assembled diaphragm, the inner edge of a ring-shaped member 5 of leather, fabric, or other suitable flexible material, is received between the sections A and A1, said inner edge of the member 5 being held in the position illustrated in Fig. 3 the same as is the flange 3*b* of support 3. At its outer edge, the member 5 has suitably secured thereto rings or washers 6 of cardboard or the like.

Referring to Fig. 5, the composite diaphragm and associated equipment is illustrated as mounted or disposed within the casing of a magnetic diaphragm-actuating device of a type well known to the art. As shown, this device comprises a casing 7 within which is disposed a magnetizable structure comprising pole pieces 8 forming with a core 9 a flux gap within which the aforesaid coil 4 is received for vibratory movement, the field in said flux gap being produced by a current traversing a coil 10 which magnetically coacts with the pole piece 8 and the core 9. The casing 7 is flared outwardly and, at its outer end, comprises a flanged edge 7*a* for the reception of the outer edge of the ring 5 and the washers 6 carried thereby, the latter being securely maintained in the position illustrated by a ring 11 suitably secured to the flange 7a and overlying the washers 6.

In operation, a relatively heavy current traverses the coil 10 and produces a relatively intense magnetic field in the flux gap in which is received the coil 4. As stated, the latter is traversed by a current varying in accordance with the sound to be reproduced and the varying magnetic field thus set up by the coil 4 reacts with the magnetic field in the flux gap to produce corresponding vibration of the composite diaphragm formed by the attached sections A and A1. Due to the provision of the corrugations 1 on the section A and the corrugations 2 on the section A1, the composite diaphragm tends to and does substantially retain its cone-shaped configuration. Accordingly, the formation of local vibrations in different areas or regions of the composite diaphragm is impended or substantially prevented and, as stated, the absence of such local vibrations is strongly conducive to the faithfulness of sound reproduction.

The diaphragm structures or sections A and A1 may be formed from any suitable material such, for example, as thin metal, impregnated cloth or, and preferably, paper. The thickness of such diaphragm-forming material may be such as is suitable and desirable although ordinarily the thickness of said material is of the order of 2, 3 or 4 mils, more or less.

The various corrugations may be formed in the structures or sections A and A1 in any way that may be suitable or desirable. Thus, said corrugations may be formed while said members are plane and flat and, hence, before they have been brought to their frustro-conical configuration. Ordinarily, however, it is unsatisfactory to corrugate the member A while it is plane and flat and to bring it then to its frustro-conical configuration. Furthermore, and if desired, the group of corrugations may be formed after said sections A and A1 have been brought to the configuration last noted. Moreover, if desirable, the sections A and/or A1 may be entirely uncorrugated, the proper strength or reinforcement being added thereto by separate rib structures which are applied to the section A circumferentially thereof and to the section A1 axially thereof.

The corrugations 1 may be suitably spaced along the surface of the section A. Thus, for example, there may be from 3 to 5 corrugations per linear inch. Similarly, the corrugations 2 on the member A1 may be suitably spaced. Thus, for example, there may be from 2 to 3 corrugations for each arcuate inch along the periphery of the larger end of said section A1. Furthermore, the radius or depth of the corrugations 1 and 2 may be such as is suitable or desirable, as for example, $\frac{1}{16}$ of an inch, more or less.

Although the specific description of my invention relates to a diaphragm which is frustro-conical and formed of frustro-coni-

cal sections it shall be understood that my invention is not to be thus limited. Thus, for example, said diaphragm-forming sections may be pyramidal or hemispherical. Still further, it shall be understood that my invention is not to be limited to a diaphragm forming a hollow geometrical figure for, obviously, the principle of my invention is applicable to plane flat diaphragms, and other types.

In this specification and in the appended claims, the expression "integral corrugations" shall be understood as defining corrugations formed by action directly on the material forming the diaphragm sections and the term "corrugations" shall be understood as generic and defining not only the aforesaid integral corrugations but those comprehending separate rib structures, as above described.

What I claim is:

1. A laminated diaphragm having the configuration of a hollow geometrical figure, said diaphragm comprising attached complemental sections of sheet material disposed one within another, said sections having corrugated surfaces.

2. A diaphragm having the configuration of a hollow frustro-conical figure, said diaphragm comprising attached complemental sections of sheet material disposed one within another, one of said sections having circular corrugations and another of said sections being provided with corrugations angularly disposed with respect to said first named corrugations.

3. A diaphragm having the configuration of a hollow frustro-conical figure, said diaphragm comprising attached complemental sections of sheet material disposed one within another, one of said sections having circular corrugations and another of said sections being provided with integral corrugations angularly disposed with respect to said first named corrugations.

4. A diaphragm having frustro-conical shape and comprising complemental sections fitting one within another and secured together, one of said sections being circularly corrugated and another of said sections having corrugations lying in planes radial to the diaphragm, alternate corrugations of said last named section being shorter than the other corrugations thereof.

5. A diaphragm of frustro-conical shape comprising complemental sections one fitting within another, said sections being secured together, one of said sections having corrugations extending circularly in planes normal to the axis of the cone and another of said sections having corrugations extending in planes radial to the cone, and a flexible annular supporting member for the diaphragm having a portion of its inner periphery extending and secured between said sections at the base of the cone.

6. A diaphragm of frustro-conical shape comprising complemental frustro-conical sections, one fitting within another and said sections being secured together, one of said sections having corrugations lying in planes normal to the axis of the cone and another of said sections having corrugations lying in planes radial to the axis of the cone, alternate corrugations of said last named section being shorter than the other corrugations thereof to prevent crowding toward the apex of the cone, and an operating member for the diaphragm including a cylindrical member having a radially extending flange secured between said sections at the top of the diaphragm.

7. A sound radiator comprising a pair of frustro-conical bodies nested one within the other in contacting relation, said bodies having corrugations in the surfaces thereof which extend in different directions.

In testimony whereof I have signed this specification this 14th day of January, 1929.

RUDOLPH F. MALLINA.