Innovation, Sciences et Développement économique Canada
Office de la Propriété Intellectuelle du Canada

Innovation, Science and Economic Development Canada
Canadian Intellectual Property Office

CA 2971299 C 2020/10/27

(11)(21) 2 971 299

(12) BREVET CANADIEN
CANADIAN PATENT

(13) C

(22) Date de dépôt/Filing Date: 2017/06/19

(41) Mise à la disp. pub./Open to Public Insp.: 2017/12/20

(45) Date de délivrance/Issue Date: 2020/10/27

(30) Priorités/Priorities: 2016/06/20 (US62/352,080);
2017/06/16 (US15/625,742)

(51) Cl.Int./Int.Cl. *C02F 1/00* (2006.01),
C02F 1/28 (2006.01), *C02F 1/42* (2006.01),
C02F 1/44 (2006.01), *C02F 1/50* (2006.01),
C02F 1/58 (2006.01), *C02F 1/66* (2006.01),
C02F 9/04 (2006.01)

(72) Inventeurs/Inventors:
MAININI, CHRISTOPHER E., US;
GROH, WILLIAM S., US;
WHITE, ANITA, US;
KAUERZ, KRISTINE, US;
WEYBRECHT, STEPHEN, US

(73) Propriétaire/Owner:
RADIO SYSTEMS CORPORATION, US

(74) Agent: DEETH WILLIAMS WALL LLP

(54) Titre : SYSTEME DE FILTRATION POUR FONTAINE D'EAU POUR ANIMAUX DE COMPAGNIE

(54) Title: FILTRATION SYSTEM FOR PET WATER FOUNTAIN

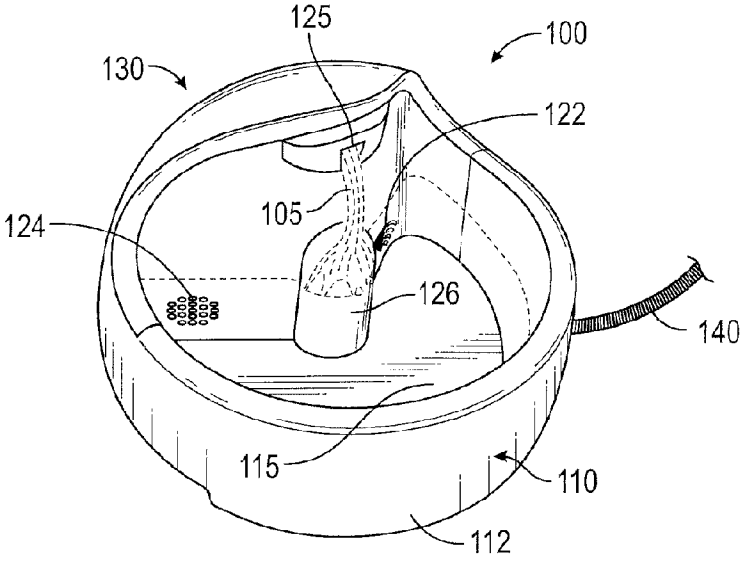

(57) Abrégé/Abstract:
A filtration system for a pet water fountain is provided. The filtration system utilizes a pump placed within or along a watering bowl. The water filtration system also utilizes a multi-stage filtering device. In one aspect, the multi-stage filtering device includes a first filtering stage representing copper zinc alloy particles, and a second filtering stage representing granulated activated carbon particles. Each stage may constitute filtering material that is separated into an array of cells residing along a vertical frame or is separated into stages placed in series within a tubular cartridge. A method for filtering water in a pet fountain is also provided herein.

ABSTRACT

A filtration system for a pet water fountain is provided. The filtration system utilizes a pump placed within or along a watering bowl. The water filtration system also utilizes a multi-stage filtering device. In one aspect, the multi-stage filtering device includes a first filtering stage representing copper zinc alloy particles, and a second filtering stage representing granulated activated carbon particles. Each stage may constitute filtering material that is separated into an array of cells residing along a vertical frame or is separated into stages placed in series within a tubular cartridge. A method for filtering water in a pet fountain is also provided herein.

Date Reçue/Date Received 2020-06-29

FILTRATION SYSTEM FOR PET WATER FOUNTAIN

[0001] STATEMENT REGARDING FEDERALLY SPONSORED RESEARCH OR DEVELOPMENT

[0002] Not applicable.

THE NAMES OF THE PARTIES TO A JOINT RESEARCH AGREEMENT

[0003] Not applicable.

BACKGROUND OF THE INVENTION

[0004] This section is intended to introduce various aspects of the art, which may be associated with exemplary embodiments of the present disclosure. This discussion is believed to assist in providing a framework to facilitate a better understanding of particular aspects of the present disclosure. Accordingly, it should be understood that this section should be read in this light and not necessarily as admissions of prior art.

Field of the Invention

[0005] The present inventive concept relates to the field of water filtration. More particularly, the invention relates to filtration systems for a pet water fountain and an improved method of water filtration.

Technology in the Field of the Invention

[0006] Various water treatment systems have been developed in recent decades. These include treatment systems for waste water, systems for drinking water, and systems for water softening. The purposes of these treatments vary, but the final goal of all of

Date Reçue/Date Received 2020-06-29

these systems is to provide the consumer with a water supply that is improved; that is, the water quality is improved to meet specifications or to enhance taste.

[0007] In recent years, pet watering fountains have been developed that incorporate at least some level of water treatment for pets. Typically, water treatment will include the use of a small, submersible "aquarium" pump that enables the circulation of water in a watering bowl. Such treatment will also include a first (or macro) filter that catches hair and food particles during circulation. Optionally, a second (or micro) filter is provided that catches smaller particles before water enters the pump.

[0008] It is observed that many animals have a preference for drinking flowing water. Pet water fountains that incorporate a pump for circulating water encourage domestic animals to drink more liquids. This, in turn, can help reduce problems with the animal's kidneys or urinary tract. In addition, flowing water typically has more dissolved oxygen, which can make the water taste better for the animal as well as provide potential health benefits. For these reasons, pet water fountains that utilize a pump have become popular.

[0009] One of the challenges with pet fountains is keeping the watering bowl and filtering components clean. If fountains are not properly cleaned and maintained, the benefits of animal watering fountains can be reduced or even reversed. This typically requires the frequent disassembling of the fountain, rinsing of the filtering media, and washing of the small pump and basin. Some of this cleaning may involve the removal of scale and mineral deposits.

[0010] Currently pet fountains offer only minimal particle filtration without treating the water chemistry itself. Accordingly, a need exists for a pet water fountain that contains an improved filtration system that catches contaminates while also reducing the buildup of scale, scum, and sediment in the pump and basin. A need further exists for a pet fountain that utilizes filtration media arranged in layers or stages, having sized openings.

BRIEF SUMMARY OF THE INVENTION

Date Reçue/Date Received 2020-06-29

[0011] A pet water fountain that employs a multi-stage filtering device is provided herein. The pet water fountain includes a basin configured to hold a volume of water. The basin may be of any configuration and volume so long as a domesticated pet, such as a dog or cat, can access the aqueous contents therein. The filtration system utilizes a pump with a pump inlet and at least one pump outlet. The pump is configured to circulate water within the basin. In one aspect, the pump is a submersible pump that is placed within or along the basin. The outflow of water from the pump may be split into at least two streams, which heightens animal interest and improves oxygenation.

[0012] The multi-stage filtering device of the pet water fountain is configured to filter water during circulation so as to (i) reduce sediment and hair from the water, (ii) remove at least a portion of chlorine, (iii) reduce bacteria, and (iv) reduce organic and inorganic particles. In one aspect, the multi-stage filtering device includes a first filtering stage comprising copper alloy particles, and a second filtering stage comprising granulated activated carbon particles. The copper alloy particles of the first stage may be copper zinc alloy particles.

[0013] The first stage and second stage of the filtering device may be disposed near the pump inlet or at a pump outlet. For example, the first stage of the filtering device may reside near the pump inlet, and the second stage may reside near a pump outlet. Alternatively, the second stage resides near the pump inlet, and the first stage resides near a pump outlet. In other embodiments, both the first and second stages reside near the pump inlet. Conversely, both the first and second stages may reside near the pump outlet.

[0014] In one embodiment, the first stage, the second stage, or both the first and second stages together reside within a tubular body. A first porous screen resides along a first end of the tubular body and a second porous screen resides along a second, opposite end of the tubular body. When so disposed, the first and second porous screens maintain the first and second stages in place within the tubular body during water circulation.

[0015] In one aspect, the tubular body is in fluid communication with the pump inlet or a pump outlet. Preferably, the tubular body holds at least two first stage compartments

Date Reçue/Date Received 2020-06-29

and at least two second stage compartments, with the first and second stage compartments alternating in series.

[0016] In an exemplary embodiment, the copper alloy particles are divided into portions and are placed along discreet cells within a frame to form the first stage. In one aspect, each of the cuprous cells of the first stage further comprises a salt. The granulated activated carbon particles may also be divided into portions and placed along discreet cells within a frame to form the second stage. The frames of each of the first and second stages provide vertical support for the discreet cells.

[0017] The particles of each of the first and second stages may be at least partially covered by a porous substrate. The porous substrate defines discreet covers for encasing particles of each of the first and second stages. In one aspect, the porous substrate comprises synthetic fibers, cellulosic fibers, or combinations thereof. In another aspect, the porous substrate is fabricated from woven fibers, non-woven fibers, or combinations thereof. The porous substrate may additionally be comprised of any other material that may be appropriate for encasing filtering media while permitting a through-flow of water.

[0018] The pet water fountain may additionally comprise a reservoir. The reservoir is configured to receive a portion of the water delivered from the pump outlet during water circulation. The reservoir is additionally configured to release water to a spout above the basin. In such embodiments, the first stage, the second stage, or both, may reside in vertical orientation within or below the reservoir. In one aspect, frames forming the first and second stages are positioned vertically within the water fountain between the pump outlet and a weir or a spout.

[0019] A filtration system for a pet water fountain is additionally provided herein. The filtration system utilizes a pet water fountain in accordance with the embodiments described above.

[0020] The filtration system includes a first stage comprising a copper alloy filtering medium. A second stage is further included that comprises a granulated activated carbon filtering medium. The first and second stages form two stages of a multi-stage filter

Date Reçue/Date Received 2020-06-29

device. The multi-stage filtering device is configured to filter water during circulation so as to (i) reduce sediment and hair from the water, (ii) remove at least a portion of chlorine, (iii) reduce bacteria, (iv) reduce organic and inorganic particles, or (v) combinations thereof.

[0021] In one aspect of the filtration system, the copper alloy medium is comprised of copper alloy particles. The copper alloy particles are divided into portions and placed along discreet cells within a frame to form the first stage. In addition, the granulated activated carbon medium may be comprised of activated carbon particles. The activated carbon particles are also divided into portions and placed along discreet cells within a frame to form the second stage. In certain embodiments, the first stage may further comprise salt pellets.

[0022] In certain aspects, the particles in the cells of each of the first and second stages are at least partially covered by a porous substrate. The porous substrate further defines discreet covers for encasing particles of each of the first and second stages. The porous substrate may be fabricated from synthetic fibers, cellulosic fibers, or combinations thereof.

[0023] The copper alloy particles of the filtration system may comprise copper and zinc. The copper alloy particles may be comprised of about 85% copper and about 15% zinc. Alternatively, the copper ally particles may be comprised of about 50% copper and 50% zinc. Alternatively, the copper alloy particles may comprise the copper ally particles comprise between about 50% and 85% copper, and between about 15% and 50% zinc. Such alloys may include brass, or be referred to as brass.

[0024] A method of filtering water for a pet water fountain is also provided. The method comprises providing or receiving a pet water fountain equipped with a multi-stage filtering device in accordance with the embodiments previously described. The method further includes placing water into the basin and providing electrical power to activate the pump. When activated, the pump circulates the water across the multi-stage

Date Reçue/Date Received 2020-06-29

filtering device. The method additionally includes allowing a domesticated dog or cat to access the pet water fountain and drink from the basin.

[0025] The method may also include providing or receiving a replaceable filter cartridge. The refillable filter cartridge houses the first filtration stage, the second filtration stage, or both stages together. In such embodiments, the first stage, second stage, or both stages of filtration in the filter cartridge may be replaced with a clean first stage, a clean second stage, or a combination of clean first and second stages of filtration. More preferably, the stages reside within a singular tubular body, with the tubular body representing the replaceable filter cartridge.

[0026] The multi-stage filtration device may be in accordance with any embodiment described above or herein. The multi-stage filtering device may further comprise a UV light chamber for removal of microbes. The filtering device may optionally comprise a reverse osmosis state, an ion exchange system, or both. The multi-stage filter device may also be configured to (iv) adjust the pH of the water (v) reduce organic and inorganic particles, (vi) reduce hydrogen sulfide, (vii) reduce chlorine, (viii) reduce soluble heavy metals, or (ix) combinations thereof. The filtering device may be further configured to control scale, algae, and bacteria in the basin.

[0027] In one aspect, the stages of the multi-stage filtering device may be removed and reversed to accommodate an opposite direction of water flow. In another aspect, more than one frame holding copper zinc alloy particles may be used, or more than one frame holding granulated activated carbon particles may be used, or both. In one aspect, cells of filtration media are stacked, and water is allowed to gravitationally fall through the stacked cells en route to a water basin there below. Alternatively, water may be pumped up through the stacked filtration media residing together within a replaceable cartridge.

[0028] In another aspect, a water pH is changed or alkalinity is changed to provide water softening or to prevent scaling or mineral buildup. Preferably, the filtration device is placed adjacent the pump and behind a housing to prevent pet or child access.

Date Reçue/Date Received 2020-06-29

BRIEF DESCRIPTION OF THE DRAWINGS

[0029] So that the manner in which the present inventions can be better understood, certain illustrations, photographs, charts and/or flow charts are appended hereto. It is to be noted, however, that the drawings illustrate only selected embodiments of the inventions and are therefore not to be considered limiting of scope, for the inventions may admit to other equally effective embodiments and applications.

[0030] Figure 1A is a first perspective view of an animal watering fountain as may be used in connection with the multi-stage filtration system of the present invention. The view is taken from a right side of the fountain. No water is in the basin of the illustrative fountain.

[0031] Figure 1B is another perspective view of the animal watering fountain of Figure 1A. Here, the view is taken from a left side of the fountain. Water is placed in the fountain and a pump is activated, creating a spout of flowing water.

[0032] Figure 1C is a perspective view of a portion of the housing from the animal watering fountain of Figures 1A and 1B. A cap has been removed from the housing, exposing a reservoir with a first stage of a filter.

[0033] Figure 1D is another perspective view of Figures 1A and 1B. Here, the cap has again been removed from the housing. An illustrative filter is shown exploded from the reservoir.

[0034] Figure 2A is a perspective view of a first stage of a filtering system, in one embodiment. Here, particles of copper zinc alloy are used as a medium.

[0035] Figure 2B is a top view of the first stage of the filtering system of Figure 2A. Here, a porous substrate has been placed over the copper zinc alloy particles to enshroud and to hold the particles in place.

[0036] Figure 3A is a perspective view of a second stage of a filtering system, in one embodiment. Here, granulated activated carbon is used as a medium.

Date Reçue/Date Received 2020-06-29

[0037] Figure 3B is a top view of the second stage of the filtering system of Figure 3A. Here, a porous substrate has been placed over the granulated activated carbon particles to enshroud and hold the particles in place.

[0038] Figure 4 is a perspective, cross-sectional view of a multi-stage filter cartridge as may be used in a vertical filter system for a pet watering fountain. The filter cartridge comprises a frame that defines an array of cells.

[0039] Figure 5 is a cut-away view of a filter cartridge as may be used for holding a multi-stage filter for a pet watering fountain, in one aspect.

[0040] Figure 6 is a cut-away view of a portion of a filter cartridge as may be used for housing a multi-stage filter for a pet watering fountain, in another aspect.

[0041] Figure 7 is a cross-sectional view of a tubular filtration device, showing granular activated carbon within a pouch.

[0042] Figure 8A is a perspective view of a two-stage filter in one embodiment. Here, the filtration media are encased within a tubular body. A copper zinc alloy stage is visible as a porous substrate.

[0043] Figure 8B is another perspective view of the two-stage filter of Figure 8A, with the filter being flipped. Here, a granulated activated carbon stage is visible as a porous substrate.

[0044] Figure 8C is a perspective, cross-sectional view of a two-stage filter with a tubular body, showing both first and second stage filtering media.

[0045] Figure 8D is a perspective, cross-sectional view of a two-stage filter with a tubular body, showing two first stage compartments and two second stage compartments.

[0046] Figure 9 is a perspective view of a filter cartridge in fluid communication with the outlet of a pump in accordance with one embodiment of the multi-stage filtration system.

Date Reçue/Date Received 2020-06-29

DETAILED DESCRIPTION OF CERTAIN EMBODIMENTS

Definitions

[0047] For purposes of the present disclosure, it is noted that spatially relative terms, such as "up," "down," "right," "left," "beneath," "below," "lower," "above," "upper" and the like, may be used herein for ease of description to describe one element or feature's relationship to another element(s) or feature(s) as illustrated in the figures. It will be understood that the spatially relative terms are intended to encompass different orientations of the device in use or operation in addition to the orientation depicted in the figures. For example, if the device in the figures is turned over or rotated, elements described as "below" or "beneath" other elements or features would then be oriented "above" the other elements or features. Thus, the exemplary tem' "below" can encompass both an orientation of above and below. The device may be otherwise oriented (rotated 90 degrees or at other orientations) and the spatially relative descriptors used herein interpreted accordingly.

Description of Selected Specific Embodiments

[0048] A filtration system for a pet water fountain is provided herein. The filtration system utilizes a pump placed within or along a pet watering bowl. The watering bowl may be of any configuration and volume so long as a domesticated pet such as a dog or cat can access circulating aqueous contents therein.

[0049] **Figure 1A** is a first perspective view of an illustrative animal watering fountain **100** as may be used with the filtration systems of the present invention. The view is taken from a right side of the fountain **100**.

[0050] As illustrated, the pet water fountain **100** first has a watering bowl **110**. The watering bowl **110** defines a radial wall **112** and an interior basin **115**. The wall **112** and the basin **115** together hold an aqueous drinking liquid, such as water. In **Figure 1A**, the

Date Reçue/Date Received 2020-06-29

bowl **110** is shown without water. However, **Figure 1B** is offered wherein the bowl **110** is holding water.

[0051] Figure **1B** offers a second perspective view of the pet water fountain **100** of **Figure 1A**. Here, the view is taken from the left side of the fountain **100**. Water has been placed in the bowl **110**. A pump (discussed below and shown in **Figure 9** at **950**) has been activated, creating an aesthetically pleasing spout **105** of flowing water.

[0052] The pet water fountain **100** exists not only to hold water, but also to circulate that water so that it remains fresh and oxygenated. The flow of water from the pump (**Figure 9** at **950**) may be split so that a first portion fills a reservoir and spills over through a spout **125**, while a second portion circulates radially around the basin **115**. In addition, the water is filtered so that it is maintained in a clean or substantially particle-free state.

[0053] In order to provide the circulation and filtering functions, various components are provided. Those components are generally held within a housing **130** and are not visible in **Figures 1A** and **1B**. However, a few of the components are shown in **Figures 1C** and **1D**, discussed below.

[0054] Referring again to **Figures 1A** and **1B** together, the pet watering fountain **100** also includes an inlet port **122** and an outlet port **124**. In the illustrative arrangement of **Figures 1A** and **1B**, the inlet port **122** and the outlet port **124** are in the faint of grates formed in the housing **130**. Water is drawn into the housing **130** through the inlet port **122**. A first portion of water is pumped into a reservoir (shown at **135** in **Figures 1C** and **1D**) and released through the spout **125**, while a second portion of water is pumped back into the basin **115** through the outlet port **124**. The first portion of water falls from the spout opening **125**, and falls back into the basin **115**, creating an aesthetically pleasing arrangement for the owner and an object of interest for the animal.

[0055] Optionally, a splash ramp **126** is provided above the water level in the basin **115**. This keeps water from splattering over the wall **112** and out of the watering bowl **110**.

Date Reçue/Date Received 2020-06-29

[0056] The animal watering fountain **100** is designed to provide water for an animal (not shown). The animal is ideally a domesticated dog or cat. The owner fills the basin **115** with water and then activates a pump (**Figure 9** at **950**). Activation may mean simply plugging in a power cord **140**. The pump **950** keeps water flowing through the housing **130** and back into the basin **115**. Similarly, the pump **950** keeps water flowing through a reservoir (seen at **135** in **Figures 1C** and **1D**), through the spout opening **125**, and back into the basin **115**.

[0057] **Figure 1C** is a perspective view of a portion of the housing **130** from the pet watering fountain **100**. Here, it can be seen that the housing **130** includes a removable cap **132**. The cap **132** is shown separated from the housing **130**, revealing a reservoir **135** within the housing **130**. The reservoir **135** receives water from the pump (**Figure 9** at **950**) when the pump **950** is activated, e.g., when the electrical cord **140** is plugged in. As the pump **950** operates, water is moved through a pump outlet **957**, causing the water level in the reservoir **135** to rise.

[0058] **Figure 1C** also reveals a filter **134** residing within the reservoir **135**. The filter **134** is representative of one or both stages of the multi-stage filtering device described in further detail below, in one embodiment. The filter **134** divides the reservoir **135** into two compartments. Water flows from the pump **950** into a first compartment in front of the filter **134**. The water then flows through the filter **134** and into the second compartment. As water fills the second compartment, it reaches the spout opening **125** of the housing **130**. The spout opening **125** thus serves as a lip over which water flows down into the basin **115**.

[0059] **Figure 1D** provides another perspective view of the pet water fountain **100** of **Figures 1A** and **1B**. Here, the cap **132** has been removed from the housing **130** and is not seen. In addition, the filter **134** has been removed from the housing **130**. The filter **134** is shown exploded above the housing **130** for illustrative purposes.

[0060] **Figure 1D** also more clearly shows the inlet port **122** and the outlet port **124** in the housing **130**. In addition, the splash ramp **126** is seen below the spout opening **125**.

Date Reçue/Date Received 2020-06-29

[0061] It is understood that the fountain **100** presented in **Figures 1A, 1B, 1C** and **1D** is merely illustrative. The present disclosure teaches a multi-stage filtering device that may be used with the fountain **100**, or with any other pet fountain having a circulating pump **950**.

[0062] In one aspect, the multi-stage filtering device includes a first filtering stage comprising copper zinc alloy particles and a second filtering stage comprising granulated activated carbon particles. Each stage may constitute filtering material that is separated into an array of material placed upon a grid having a frame. The frames are placed within respective porous pouches (or are covered by a porous substrate) that closely hold the filtering material within each cell of the array. The porous substrates with filtering media are secured to or otherwise held along the cells within the respective frames.

[0063] **Figure 2A** is a perspective view of a first stage **200** of a filtering system, in one embodiment. Here, particles of copper zinc alloy **210** are used as a medium. A frame **220** divides the first stage **200** into discreet cells. A porous substrate has been removed for illustration revealing the particles **210**. **Figure 2B** is a top view of the first stage **200** of the filtering system. Here, the porous substrate **215** is placed over the copper zinc alloy particles.

[0064] The copper zinc alloy particles provide a bacteriostatic medium and also act to assist in raising the pH level of the treated water. This serves to "soften" the water during circulation. The alloy may be, for example, KDF 55 available from KDF Fluid Treatment, Inc. of Three Rivers, Michigan. Alternatively, the alloy may be KDF 85 also available from KDF Fluid Treatment, Inc. Those of ordinary skill in the art will understand that municipal water supplies can contain calcium, magnesium, or other minerals that make water "hard." Such minerals can form scale and cause a variety of problems in hardware. It is believed that the KDF alloy products will remove these minerals. KDF Fluid Treatment, Inc. has represented that its process media are also non-toxic. Some of the KDF alloy products are promoted as being able to remove mercury as well.

Date Reçue/Date Received 2020-06-29

[0065] It is observed that other copper alloys **210** may be used as the first filtering medium **200**. Copper alloys **210** are metal alloys that have copper as a principal component. Copper alloys **210** are known to have a high resistance against corrosion and are frequently used as a material for piping. The first filtering medium **200** may comprise brass particles, which is copper mixed with zinc and also sometimes tin or aluminum. The first filtering medium **200** may alternatively comprise copper-nickel-zinc particles. In embodiments comprising copper-zinc alloys **210**, the filtering medium **200** may include 30% to 90% copper. One embodiment may comprise about 50% copper, while another embodiment may comprise about 85% copper. The filtering medium **200** preferably comprises between 70% to 10% zinc, inclusive. One embodiment may comprise about 50% zinc, while another embodiment may comprise about 15% zinc.

[0066] It is further observed that the first filtering medium **200** may include small amounts of salt, such as potassium chloride or sodium chloride. Softening salt pellets are available at many retail outlets. These salts will further act to soften the water during circulation.

[0067] A copper-zinc alloy **210** may be used as part of an oxidation reduction process, or electro-chemical reaction. During this reaction, electrons are transferred between molecules, and new elements are created. For example, chlorine is changed into benign, water-soluble chloride particles which are then filtered or harmlessly circulated. Similarly, some heavy metals such as lead and mercury are effectively removed from the water by plating out into the medium's surface.

[0068] **Figure 3A** is a perspective view of a second stage **300** of a filtering system, in one embodiment. Here, granulated activated carbon particles **310** are used as a medium. A frame **320** divides the second stage **300** into discreet cells. A porous substrate has again been removed for illustration. **Figure 3B** is another top view of the second stage **300** of the filtering system. Here, the porous substrate **315** is placed over the granulated activated carbon particles **310**.

Date Reçue/Date Received 2020-06-29

[0069] The granulated activated carbon medium **310** helps remove chlorine, lead, pesticides, and heavy metals from water. This, in turn, can improve the taste and odor of water sourced from municipal water supplies. The carbon filter granules **310** may be derived, for example, from coconut fiber. The coconut carbon helps stimulate adsorption and catalytic oxidation to remove chlorine and sediment from the circulating water. The granulated activated carbon medium **310** also serves as a carbon filter to remove, or at least reduce the presence of, certain sized physical and sediment impurities from the water. In one embodiment, the carbon filter granules can remove particles down to 5 microns in size and can also capture particles that may shelter living organisms from being fully exposed during an optional UV treatment process, described below.

[0070] In each of the first **200** and second **300** stages, a frame **220**, **320** is used to support the particles **210**, **310**. The first stage filtration particles **210** are supported along frame **220** while the second stage filtration particles **310** are supported along frame **320**. Each frame **220**, **320** preferably comprises an array of cells. In the illustrative frames **220**, **320**, a 2 x 3 array of cells is shown. However, it is understood that other arrays may be considered.

[0071] In other embodiments, the first **200** and second **300** filtration particles may share a single frame. In such embodiments, the first filtration stage **200** may be disposed vertically along a front face of the frame, and the second filtration stage **300** may be disposed vertically along a back face of the frame, thereby allowing water to pass horizontally through the first **200** and second **300** filtration particles before consumption. Alternatively, the first **200** and second **300** filtration particles may be interspersed along both faces of a shared frame.

[0072] In any aspect, the first **200** and second **300** stages are illustrated together by filter **134**.

[0073] It is again observed in **Figures 2B** and **3B** that the particles **210**, **310** are covered by the porous substrates **215**, **315**. The substrates **215**, **315** may also represent pouches that receive particles **210**, **310**. In either instance, the porous substrates **215**, **315**

Date Reçue/Date Received 2020-06-29

are disposed within respective cells inside the frames **220**, **320**, and closely hold the particles **210**, **310**.

[0074] It is noted here that the use of the terms "first stage" and "second stage" are not intended to imply a sequence or order of filtering; rather, these terms simply indicate that two separate filtering steps are being taken. Thus, in one aspect, water may first flow through a filtration medium comprised of copper zinc alloy particles **210**, and then flow through a second filtration medium comprised of granulated activated carbon particles **310**. Alternatively, water may first flow through a filtration medium comprised of granulated activated carbon particles **310** and then flow through a second filtration medium comprised of copper zinc alloy particles **210**. Alternatively still, more than one layer (or medium) of copper zinc alloy particles **210** may be used and/or more than one layer (or medium) of granulated activated carbon particles **310** may be used.

[0075] It is also noted here that the use of the tetras "circulate" or "circulation" are not intended to imply the movement of liquid only in a circular fashion. Instead, these terms are simply meant to indicate that the liquid will be pumped through specified areas of a basin or other areas of a watering fountain.

[0076] Both filtration media may reside proximate the water inlet **955** of the pump **950**. Alternatively, both filtration media may reside proximate the water outlet **957** of the pump **950**. Alternatively still, one filtration medium may reside proximate the pump **950** while the other resides in front of or within the reservoir **135**.

[0077] **Figure 4** is a perspective, cross-sectional view of a multi-stage filter cartridge **400** as may be used in a vertical filter system for a pet watering fountain. The filter cartridge **400** comprises a frame **420** that defines an array of cells 410. The first stage **200** of filtration may be housed within the array of cells 410. As discussed in conjunction with **Figures 2A** and **2B**, the first filtering stage **200** may comprise copper zinc alloy particles **210** that are encapsulated in a porous screen **215**. In the **Figure 4** embodiment, a 2 x 12 array of cells is shown. However, it is understood that other arrays may be considered. The back portion of the filter cartridge **400** includes a compartment **430** for

Date Reçue/Date Received 2020-06-29

accommodation of the second stage **300** of filtration. As discussed in conjunction with **Figures 3A** and **3B**, the second filtering stage **300** may comprise granulated activated carbon particles **310** that are encapsulated in a porous screen **315**. The encapsulated active carbon particles **310** may be divided within discreet cells or may exist in a single cell that extends through the compartment **430**.

[0078] In operation, the filter cartridge **400** of **Figure 4** may be disposed vertically within a watering fountain as generally shown at **134** of **Figures 1C** and **1D**. When so disposed within the reservoir (**135** at **Figure 1D**), unfiltered water enters the filter cartridge **400** in the direction of arrow **405**. Filtered water then exits the filter cartridge **400** in the direction of arrow **407**, spills over the spout opening (shown at **125** of **Figure 1D**) and flows into the basin (**115** of Figure 1B) for consumption.

[0079] **Figure 5** is a cut-away view of a filter cartridge **500** in an alternate embodiment as may be used for holding a filter for a pet watering fountain. The filter cartridge **500** comprises a cylindrical container **530** that is divided into a first housing **510A** that accommodates the first filtering stage **200** and a second housing **510B** that accommodates the second filtering stage **300**. It is understood that the first housing **510A** may alternatively accommodate the second filtering stage **300**, and the second housing **510B** may alternatively accommodate the first filtering stage **200**. A permeable wall **520** may be disposed between the first **510A** and second **510B** housings. A similar cartridge may be designed that only holds a single filtering medium. Cartridges may also be designed to hold more than two filtering media.

[0080] The filter cartridge **500** may additionally include a mechanism **535** for reversibly attaching the filter cartridge **500** to the watering fountain or to reversibly join two halves of the filter cartridge **500**. Such a mechanism **535** allows a user to replace the first **200** and second **300** filter stages without having to discard the filter cartridge **500**. As shown, the mechanism **535** may comprise openings to receive respective screws. Additional mechanisms **535** may be employed for reversible attachment of the filter cartridge **500**. The filter cartridge **500** may further include a handle **560** to allow for easy removal of the cartridge **500** from the pet watering fountain.

Date Reçue/Date Received 2020-06-29

[0081] As shown in **Figure 5**, water is pumped in the direction of arrow **505** though an inlet port **540** of the filter cartridge **500**. Water then passes through the first **200** and second **300** filter stages before exiting the filter cartridge at an exit port **545** in the direction of arrow **507**. The water may optionally flow through the filter cartridge **500** in the opposite direction.

[0082] **Figure 6** is a cut-away view of a portion of a filter cartridge **600** as may be used for housing a multi-stage filter for a pet watering fountain, in yet another embodiment. The filter cartridge **600** includes a generally tubular body **630** that slightly tapers at an upper portion **614**. The lower portion **612** of the filter cartridge **600** provides a compartment for the first filtering stage **200**, such as copper-zinc alloy particles **210**. The upper portion **614** provides a compartment for the second filtering state **300**, which may comprise granulated activated carbon particles **310**. In this manner, the first **200** and second **300** filtering media are stacked within a single tubular body **630**. Again, it is understood that the location of the filtering media **200**, **300** may be swapped in alternate embodiments.

[0083] The filter cartridge **600** may additionally include a frame **620**. The frame **620** supports the filtering media **200**, **300**. The filtering media **200**, **300** are preferably encapsulated within a porous substrate **215**, **315**. The porous substrate **215**, **315** may be attached directly to the lower and upper ends of the filter cartridge **600** to encapsulate the respective filtering media **200**, **300**. A similar cartridge may be designed that holds only a single filtering medium. Cartridges may also be designed to hold more than two filtering media.

[0084] In operation, water enters the filter cartridge **600** at the bottom end of lower portion **612** in the direction of arrow **605**. The water then flows in the direction of arrow **607** through the filtering media **200**, **300** before exiting the filter cartridge **600** at the top end of the upper portion **614**. In one arrangement, the water may flow through the filter cartridge **600** in the opposite direction.

Date Reçue/Date Received 2020-06-29

[0085] **Figure 7** is a cross-sectional view of a pouch **730** serving as an in- line filter **700**. Here, granular activated carbon particles **310** are shown residing within the pouch **730**, and a porous screen **715** is shown at two ends of the planar pouch **730** to hold the carbon particles **310** in place.

[0086] **Figure 8A** is a perspective view of the external surface of a two- stage filter **800**, in one embodiment. Here, the filter **800** defines a tubular body **830** that is dimensioned to reside within or along a tubing (as shown in a **Figure 9** at **925**) extending from the pump inlet **955** or the pump outlet **957**. In the view of **Figure 8A**, copper zinc alloy particles **210** reside within the tubular body **830**, and are held in place by a porous screen **815**. The copper zinc alloy particles **210** represent the first stage **200** of the filter **800**.

[0087] **Figure 8B** is another perspective view of the two-stage filter **800** of **Figure 8A**, but with the tubular body **830** being flipped. Here, activated carbon particles **310** reside within the tubular body **830** and are also held in place by a porous screen **817**. The carbon particles **310** represent the second stage **300** of the filter **800**.

[0088] **Figure 8C** is a cross-sectional view of an in-line filter **850** that comprises a tubular body **830**. Here, a tubular pouch **831** is contained within the tubular body **830**. The tubular pouch encases particles **210**, **310**, serving as the first **200** and the second **300** stages of a filtering system. The copper zinc alloy particles **210** reside at a first end **862** of the tubular pouch **831**, while the granular activated carbon particles **310** reside at a second end **864** of the tubular pouch **831**. A porous screen **815** is shown at opposing open ends of the tubular body **830** to close the opposing open ends of the tubular body **830** and to hold the tubular pouch **831** in place. Optionally, an additional porous screen **816** may be disposed between the first **210** and second **310** particles of the filtering system **850**.

[**0089**] **Figure 8D** shows an embodiment of the tubular pouch seen in **Figure 8C** that includes a four stage filter with two first stage compartments **210** and two second stage compartments **310**, with the first and second stage compartments alternating in series.

Date Reçue/Date Received 2020-06-29

[0090] In the arrangements of **Figures 7**, **8A**, **8B**, and **8C**, the filtering particles **210**, **310** are held within the tubular body **730**, **830** at each end by a porous screen **715**, **815**, **817**. The illustrative screens **215**, **315**, **715**, **815**, **816**, **817** may comprise pores of any size that closely hold the first **200** and second **300** filtering media in place. The screens **215**, **315**, **715**, **815**, **816**, **817** themselves may serve a filtering function, having pores with limited openings. For filtering functions, the screens **215**, **315**, **715**, **815**, **816**, **817** may comprise pores of up to 1,000 microns in size. Embodiments may comprise pores that are up to **100** microns in size. In alternate embodiments, the pores may range from 0.2 microns to 2 microns in size. Some embodiments may comprise pores that are about 0.5 microns in size. Those of ordinary skill in the art will understand that as the diameter of the screen openings is reduced and as the porosity of the filtering particles is lowered, the capacity of the pump **950** needs to be increased.

[0091] **Figure 9** is a perspective view of an illustrative pump **950** as may be used in connection with the a multi-stage filtration system **900**. In this arrangement, a filter cartridge **910** is in fluid communication with an outlet **957** of the pump **950**. The filter cartridge may be, for example, the filter cartridge **500** of **Figure 5**.

[0092] A tubing **925** is shown extending from the pump outlet **957**, and a portion of the tubing **925** has been cut away to reveal the filter cartridge **910** that resides therein. The tubing **925** is configured to allow for removal and replacement of the filter cartridge **910** and its filtering media **200**, **300** after a period of use. Although shown adjacent the pump outlet **957** in **Figure 9**, it is to be under stood that the filter cartridge **910** may reside either downstream or upstream of the pump **950**. For example, the filter cartridge **910** may reside adjacent the pump inlet **955**.

[0093] In operation of the pump **950** of **Figure 9**, water enters the pump **950** at the pump inlet **955** in the direction of arrow **905**. The pump **950** then propels water to the pump outlet **957** and through the filter cartridge **910**, where water is filtered via filtering media **200**, **300**. Water then exits the filter cartridge **910** in the direction of arrow **907** and continues through the tubing **925** to be delivered to the water basin (**115** of Figure 1A) for consumption.

Date Reçue/Date Received 2020-06-29

[0094] It should be understood that the multi-stage filtration system **900** as depicted in **Figure 9** may be configured or adapted to incorporate any filter cartridge **910**, housing, or filtering media **200**, **300** that would be apparent to those having skill in the art or described elsewhere in this application. In embodiments, the filter cartridge **910** may be integral with the tubing **925** (as shown). Alternatively, the filter cartridge **910** may exist as an independent housing for filtering media **200**, **300** that may be separately removable for simplified cleaning and replacement of the filtering media **200**, **300**.

[0095] In any arrangement, the filtering system **900** preferably utilizes the pump **950** to circulate water through the system. The pump **950** is a submersible pump operating, for example, at 50-60 Hz and about 5.2 volts of power. The pump **950** may be, for example, the SP-880 aquarium pump manufactured by Resun™ of Shenzhen, China. The pump **950** may have a valve that allows the operator to adjust the water flow. In one aspect, the pump **950** pumps up to about 370 liters of fluid per hour.

[0096] Where a submersible pump **950** is used, the pump **950** will reside within the water basin **115**. However, the filtration systems and the pet fountains herein may operate successfully with pumps that reside along the bowl **110** but above the water line of the basin **115**. In this instance, the pump **950** will have a tube (not shown) extending from the pump inlet **955** to bring water into the pump **950** and then a separate tube extending from the pump outlet **957** to deliver water back to the basin **115**. The filtering system may reside either upstream of or downstream of the pump **950**.

[0097] A method for filtration of water for a pet fountain is also disclosed herein. In accordance with the method, a pet owner receives or is provided with a pet fountain. The pet fountain includes a basin **115**, and a pump **950** residing within or along the basin **115**. The basin **115** works as a wall **112** to serve as a watering bowl **110** and may be of any configuration and volume so long as a domesticated pet such as a dog or cat can access the liquid contents.

[0098] The method also includes inserting a multi-stage filtration device within the basin and in fluid communication with the pump **950**. The multi-stage filtration device

Date Reçue/Date Received 2020-06-29

may be in accordance with any embodiment described herein. The multi-stage filtration device may be pre-inserted when the pet owner receives the pet fountain or may be inserted or replaced by the pet owner after purchase.

[0099] As part of the method, additional filtering or treatment steps may be employed. In one aspect, a third stage may be used that includes an anion resin bed. The anion resin bed contains positively charged resins that can remove negatively charged ions from the inflowing water stream. Negatively charged ions may include arsenates, nitrates, sulfides and sulfates. Alternatively, the resin bed may contain positively charged resins.

[00100] In another step, a UV chamber may be provided in a pet water fountain. The UV chamber comprises an ultraviolet light that kills microbes to further purify the water without lowering the pH of the water. Such treatment can kill bacterium, fungi and viruses. In one embodiment, the UV reactor unit can be selected to meet U.S. Pharmacopeia standards for purification. The inclusion of a UV treatment device can also possibly provide immunity from "boil water" orders that are sometimes issued during or after municipal water system damage or repairs.

[00101] The device and method disclosed herein provide a multi-stage design that allows the pet owner to provide cleaner, better tasting water for a pet. At the same time, the design allows the pet owner to go longer times without having to clean the basin and fountain components. In one aspect, the filtration stages herein produce a slightly alkaline water, which is believed to have positive health benefits by aiding the absorption of oxygen into the water rather than repelling or expelling oxygen from the water.

[00102] Variations of the filtering device and of the methods for filtering water for a pet fountain herein, may fall within the spirit of the claims, below. It will be appreciated that the inventions are susceptible to modification, variation, and change without departing from the spirit thereof.

Date Reçue/Date Received 2020-06-29

Examples

[00103] An example is provided below to facilitate a more complete understanding of the invention. The following example illustrates an exemplary mode of making and practicing the invention. However, the scope of the invention is not limited to specific embodiments disclosed in this Example, which is for purposes of illustration only, since alternative methods can be utilized to obtain similar results.

Example 1

[00104] One of the challenges with pet fountains is keeping the watering bowl and filtering components clean. If fountains are not properly cleaned and maintained, the benefits of animal watering fountains can be reduced or even reversed. This typically requires the frequent disassembling of the fountain, rinsing of the filtering media, and washing of the small pump and basin. Some of this cleaning may involve the removal of scale and mineral deposits.

[00105] Given the cumbersome process of cleaning a pet watering bowl and fountain, an objective the filtering system and pet fountain in accordance with embodiments of the present invention is to provide a pet fountain that requires less frequent cleaning.

[00106] To study the effects of an embodiment of the water filtering system on bowl cleanliness, an experiment was performed wherein a control watering fountain that employs a standard submersible filter was allowed to run undisturbed for a period of 14 days. A second watering fountain that employs a filtering system in accordance with an embodiment of the present invention was also allowed to run undisturbed for the same 14-day period.

[00107] **Example 1A** shows a photographic view of the bowl utilized in the control watering fountain that employed a standard submersible filter after the 14-day test period. An accumulation of scale and scum is visible within the bowl.

Date Reçue/Date Received 2020-06-29

[00108] **Example 1B** shows a photographic view of the bowl utilized in the second watering fountain that employed a filtering system in accordance with an embodiment of the present invention after the 14-day test period. No accumulation of scale or scum is visible due to the properties of the first **200** and second **300** stages of treatment. The bowl of **Figure 1B** is substantially cleaner and shinier than the bowl of **Figure 1A**.

Date Reçue/Date Received 2020-06-29

CLAIMS

1. A pet water fountain comprising:

a basin configured to hold a volume of water accessible to a domesticated pet;

a pump having a pump inlet and a pump outlet, the pump residing in a portion of the basin and being configured to circulate water within the basin when activated;

tubing connected to the pump outlet; and

a filtering device configured to filter water during circulation, wherein the filtering device comprises a tubular pouch, wherein a first filtration stage and a second filtration stage together reside in the tubular pouch, the tubular pouch residing in a tubular body, a first porous screen covering a first open end of the tubular body, a second porous screen covering a second opposite open end of the tubular body, wherein the first and second porous screens maintain the tubular pouch in place within the tubular body during water circulation, wherein the tubular body is disposed within the tubing connected to the pump outlet.

2. The pet water fountain of claim 1, wherein:

the domesticated pet is a dog or a cat;

the pump is a submersible pump; and

the pump resides within the basin.

3. The pet water fountain of claim 1, wherein:

the first filtration stage of the filtration device comprises copper alloy particles; and

the second filtration stage of the filtration device comprises granulated activated carbon particles.

4. The pet water fountain of claim 3, wherein:

the first filtration stage and the filtration second stage reside near the pump outlet.

5. The pet water fountain of claim 3, wherein:

the copper alloy is a copper zinc alloy;

the tubular pouch is in fluid communication with the pump outlet; and

Date Reçue/Date Received 2020-06-29

a third porous screen separates the first stage and the second stage.

6. The pet water fountain of claim 5, wherein:

the tubular pouch holds at least two first stage filtration compartments and at least two second stage filtration compartments, with the first and second stage filtration compartments alternating in series.

7. A filtration system for a pet water fountain, wherein the pet water fountain comprises a basin configured to hold a volume of water accessible to a domesticated pet, and a submersible pump having a pump inlet and a pump outlet configured to circulate water within the basin, and the filtration system comprises:

tubing connected to the pump outlet;

a first stage comprising a copper alloy filtering medium; and

a second stage comprising a granulated activated carbon medium;

and wherein the first stage and the second stage form two stages of a multi-stage filtering device configured to filter water during circulation, wherein the multi-stage filtering device comprises a tubular pouch, wherein the first stage and the second stage reside within the tubular pouch, the tubular pouch residing in a tubular body, a first porous screen covering a first open end of the tubular body, a second porous screen covering a second opposite open end of the tubular body, wherein the first and second porous screens maintain the tubular pouch in place within the tubular body during water circulation, wherein the tubular body is disposed within the tubing connected to the pump outlet.

8. The filtration system of claim 7, wherein:

the domesticated pet is a dog or a cat;

the pump is a submersible pump that resides within the basin; and

the multi-stage filtering device further (vi) adjusts the pH of the water (vii) reduces hydrogen sulfide, (viii) reduces organic and inorganic particles from the water, or (ix) combinations thereof.

9. The filtration system of claim 7, wherein:

Date Reçue/Date Received 2020-06-29

the tubular pouch is in fluid communication with the pump outlet;

a third porous screen separates the first stage and the second stage; and

the copper alloy is a copper zinc alloy.

10. The filtration system of claim 9, wherein:

the tubular pouch holds at least two first stage compartments and at least two second stage compartments, with the first and second stage compartments alternating in series and a screen separating each of the compartments.

Date Reçue/Date Received 2020-06-29

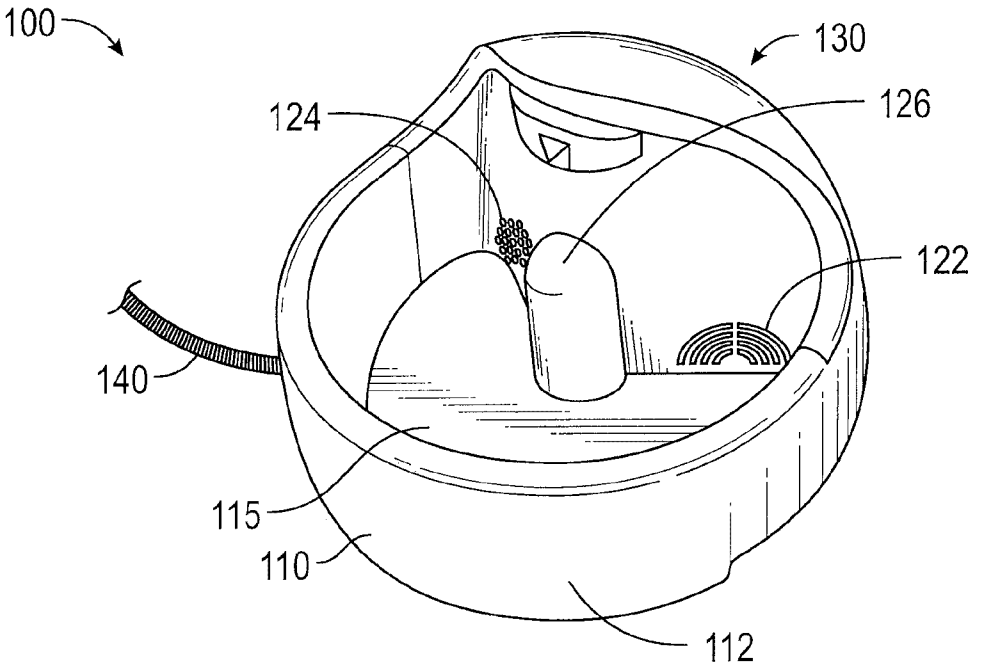

FIG. 1A

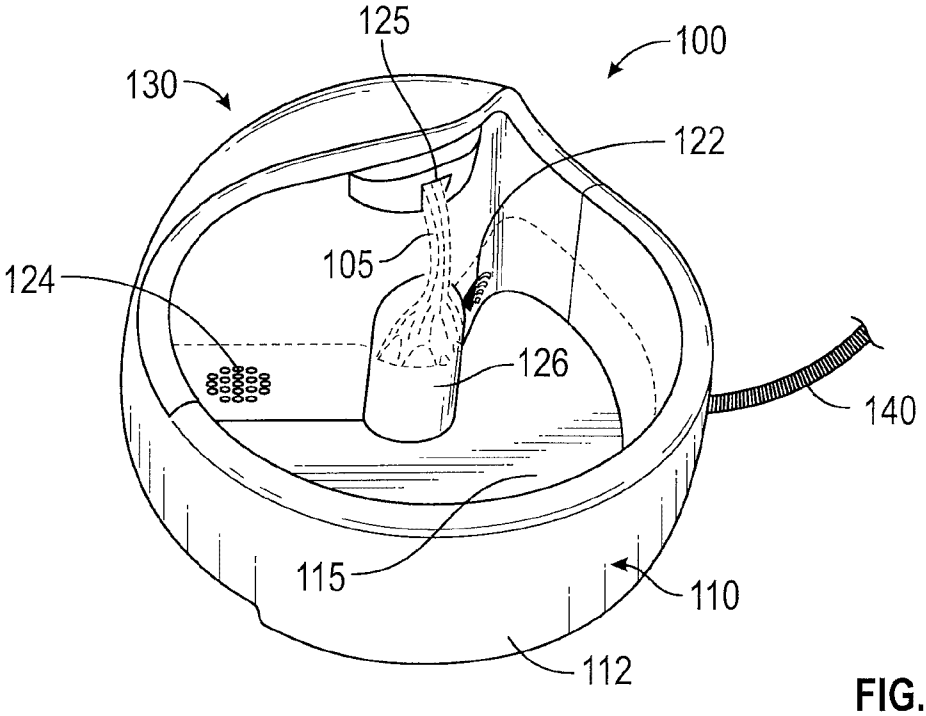

FIG. 1B

Date Reçue/Date Received 2020-06-29

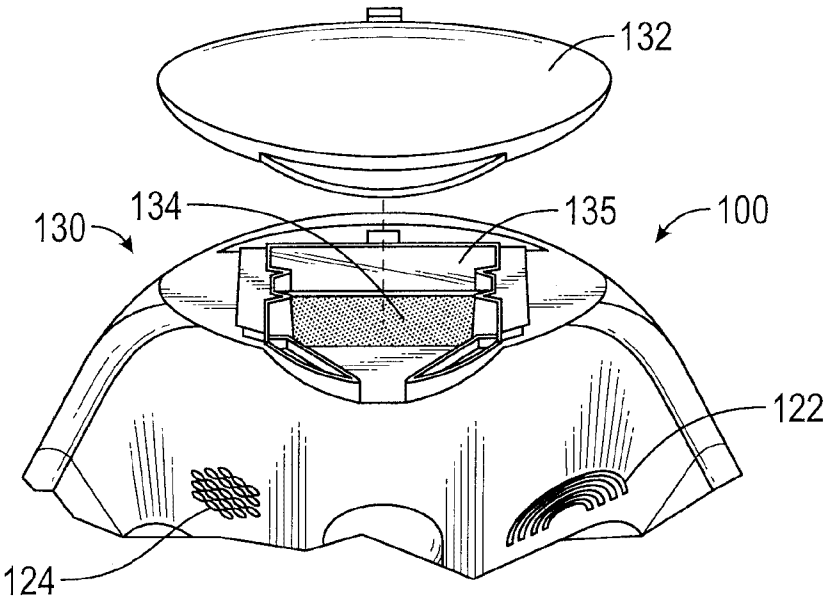

FIG. 1C

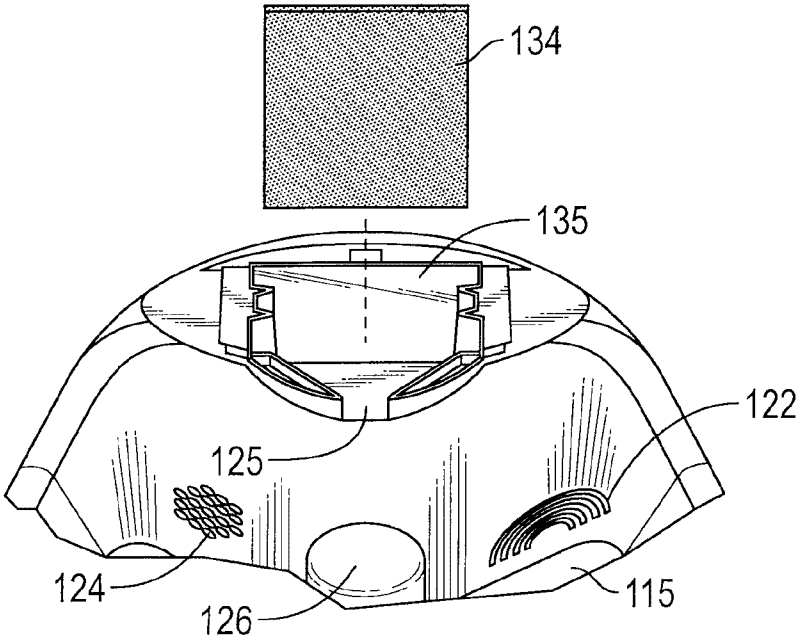

FIG. 1D

Date Reçue/Date Received 2020-06-29

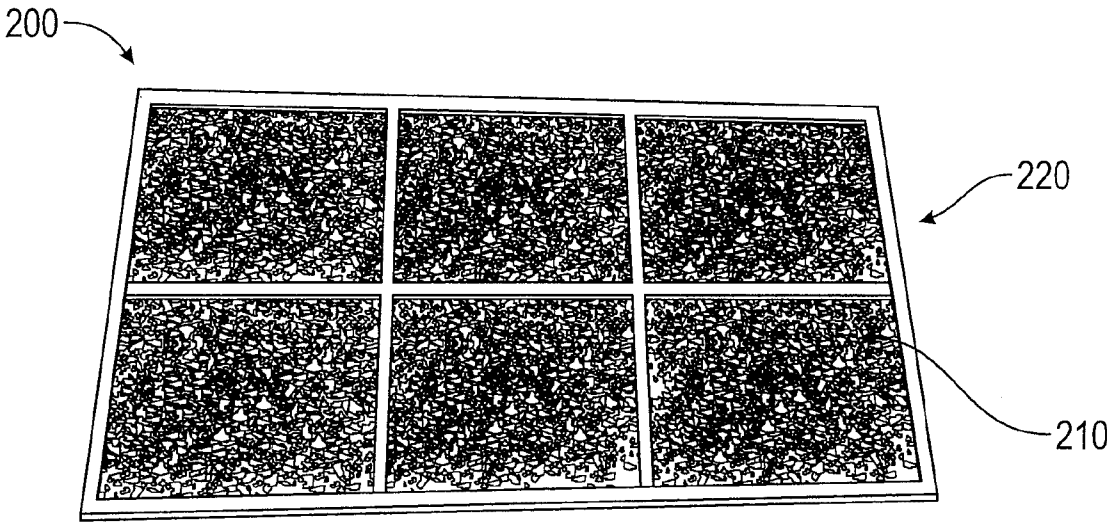

FIG. 2A

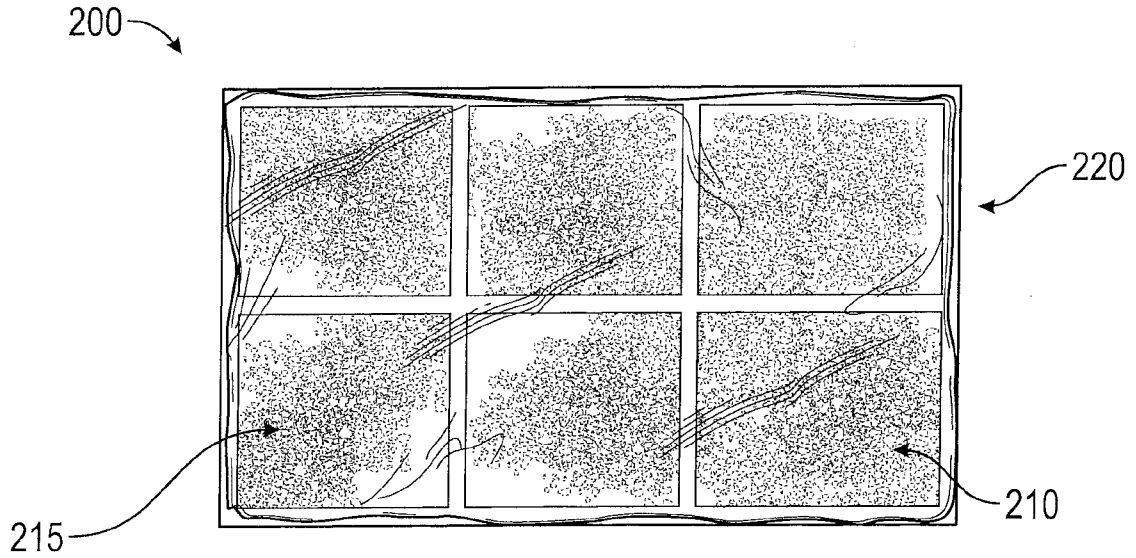

FIG. 2B

Date Reçue/Date Received 2020-06-29

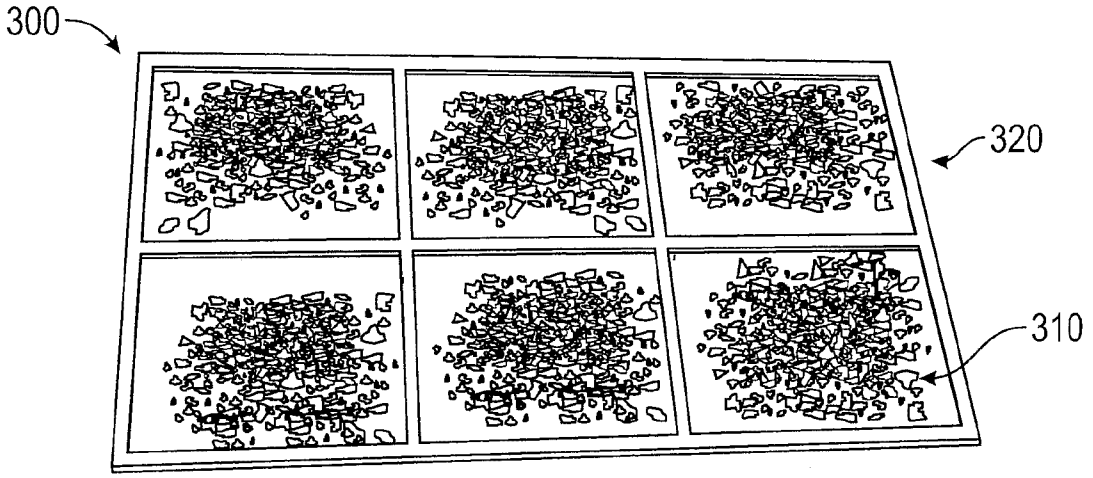

FIG. 3A

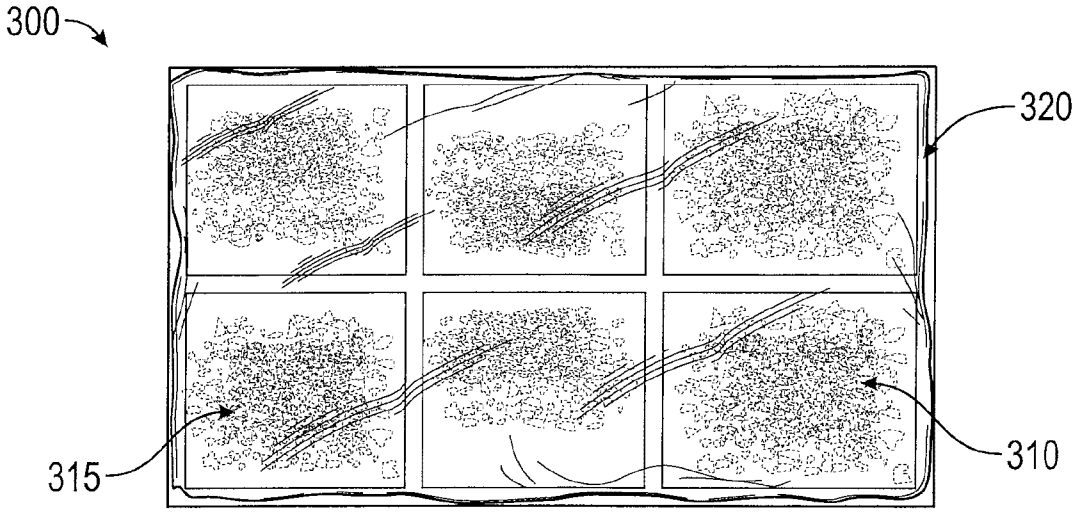

FIG. 3B

Date Reçue/Date Received 2020-06-29

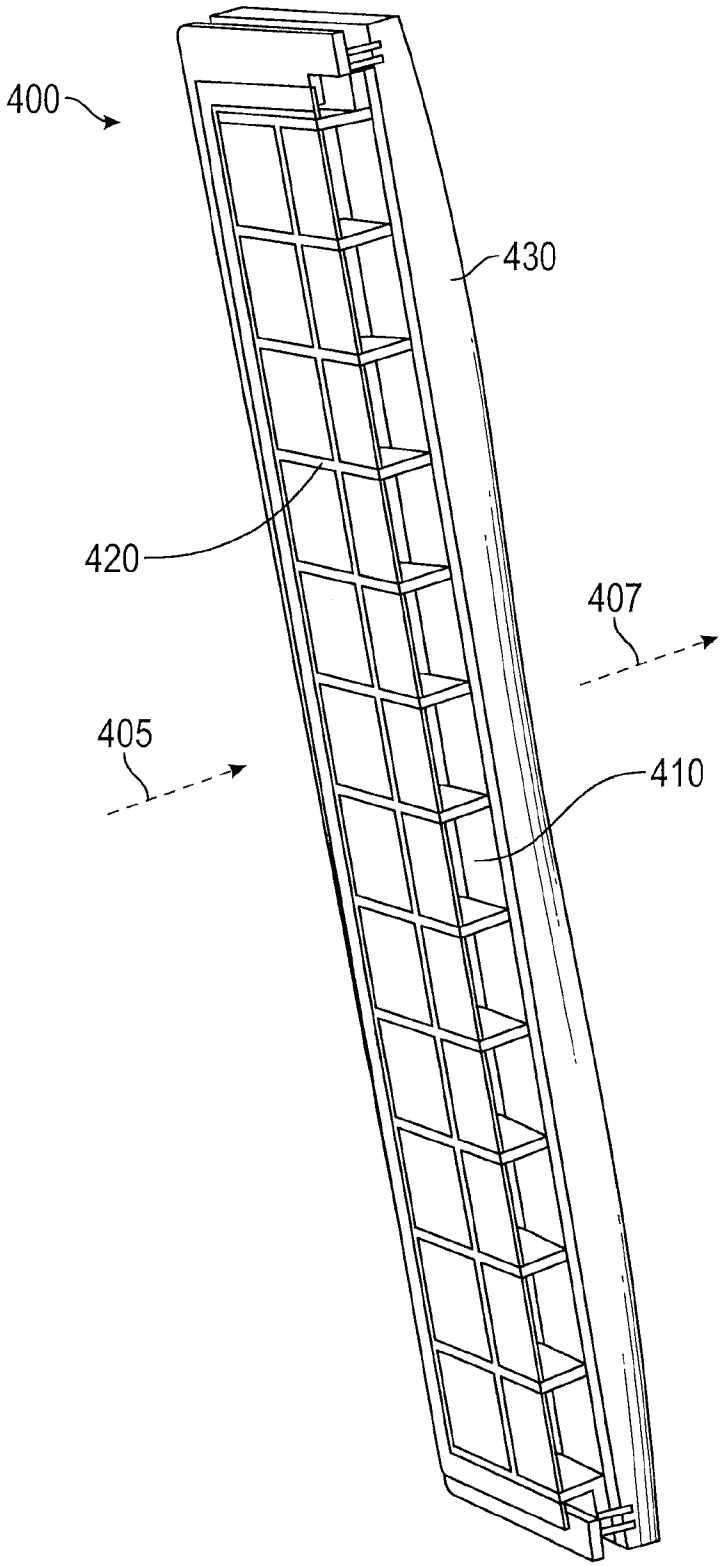

FIG. 4

Date Reçue/Date Received 2020-06-29

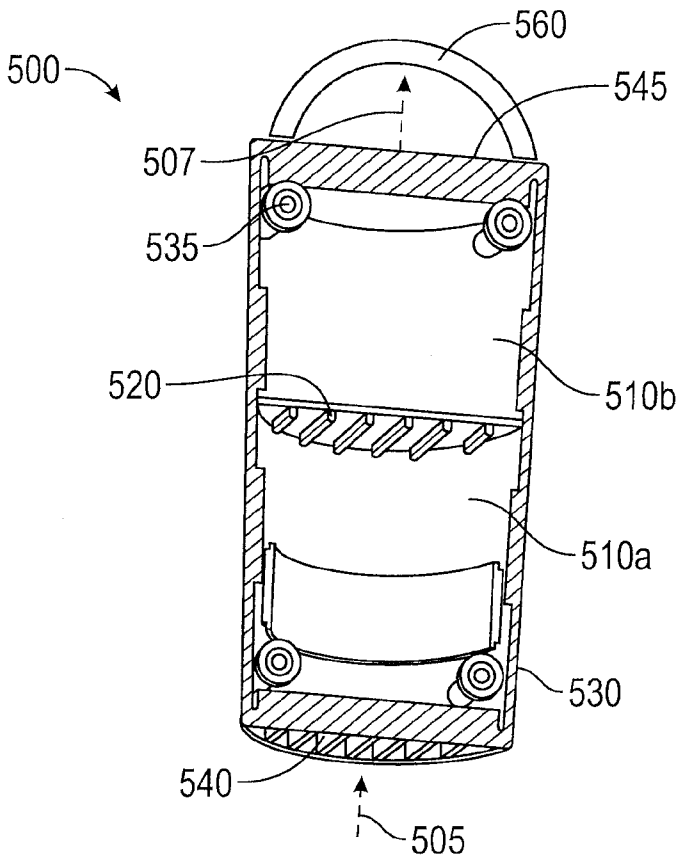

FIG. 5

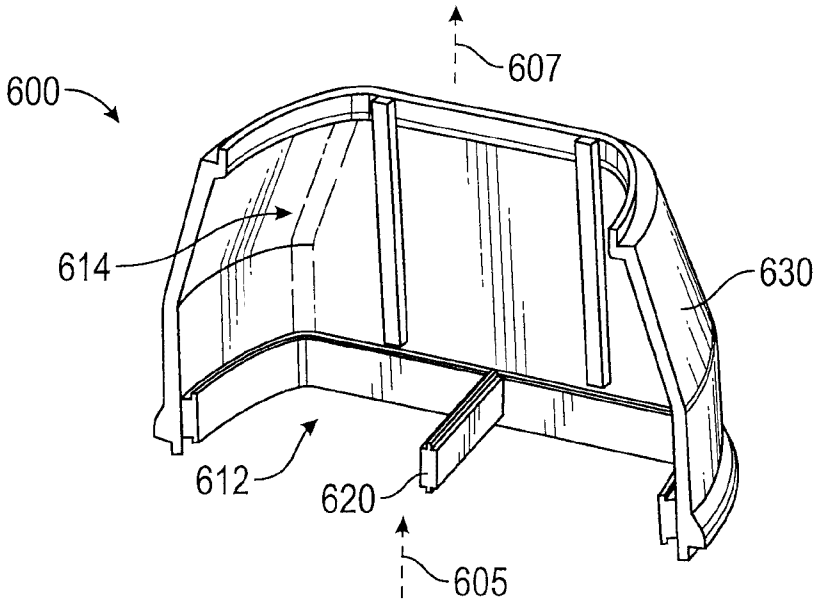

FIG. 6

Date Reçue/Date Received 2020-06-29

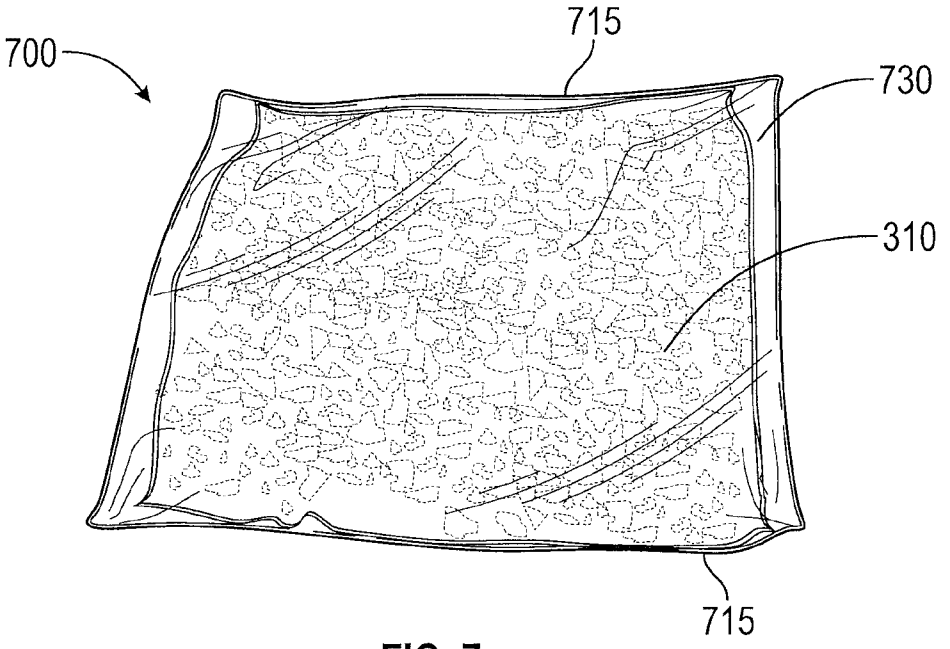

FIG. 7

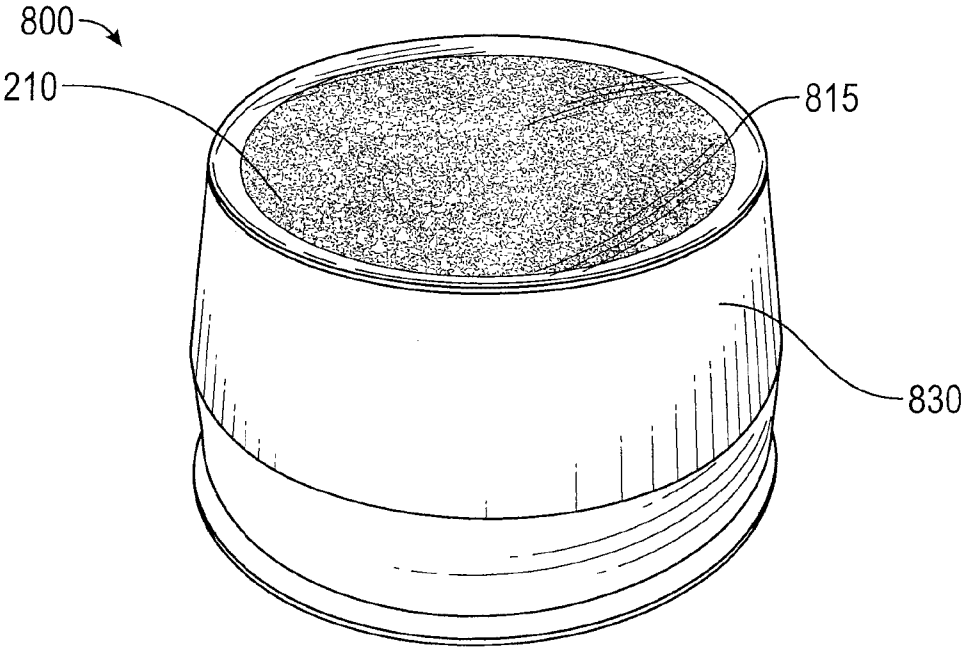

FIG. 8A

Date Reçue/Date Received 2020-06-29

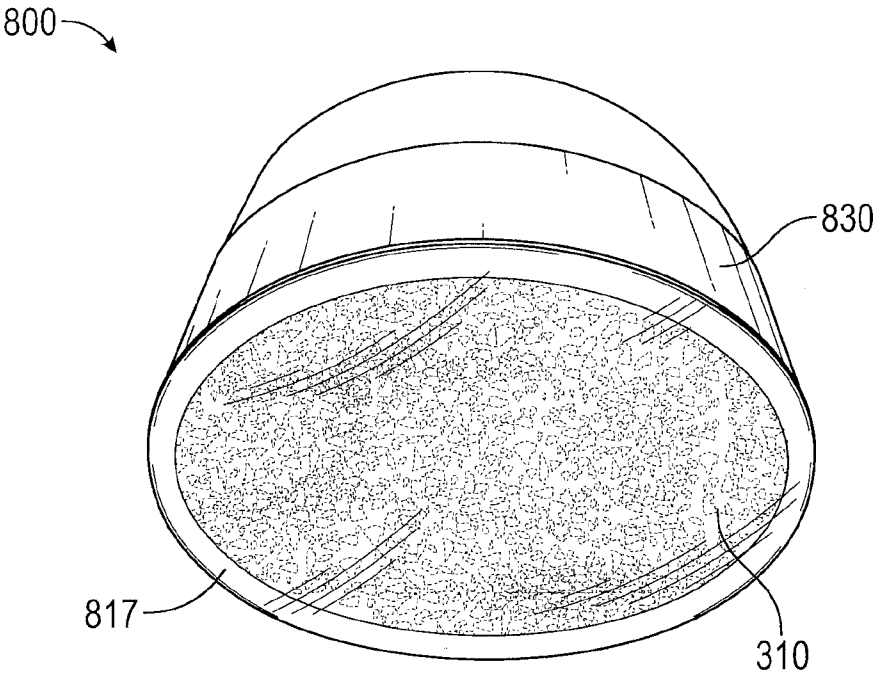

FIG. 8B

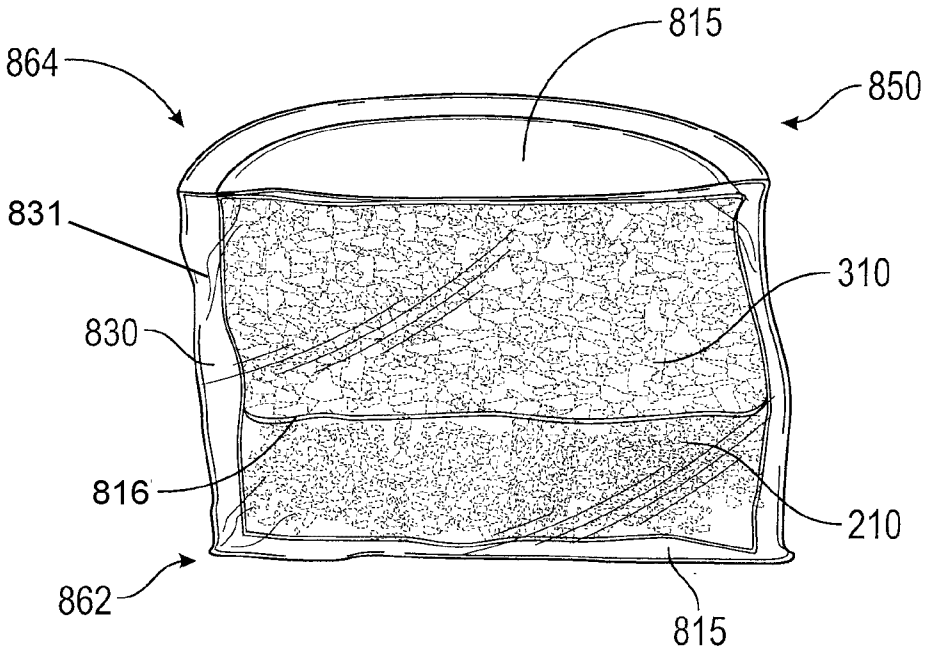

FIG. 8C

Date Reçue/Date Received 2020-06-29

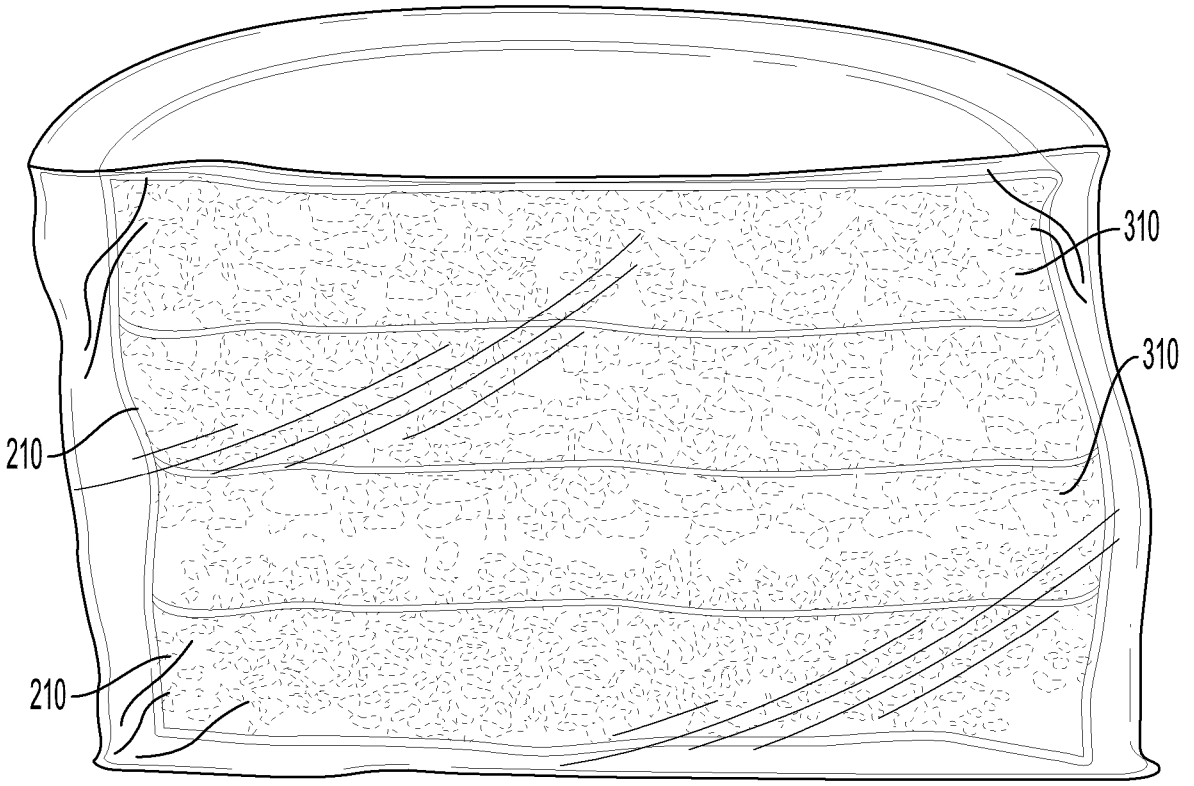

FIG. 8D

Date Reçue/Date Received 2020-06-29

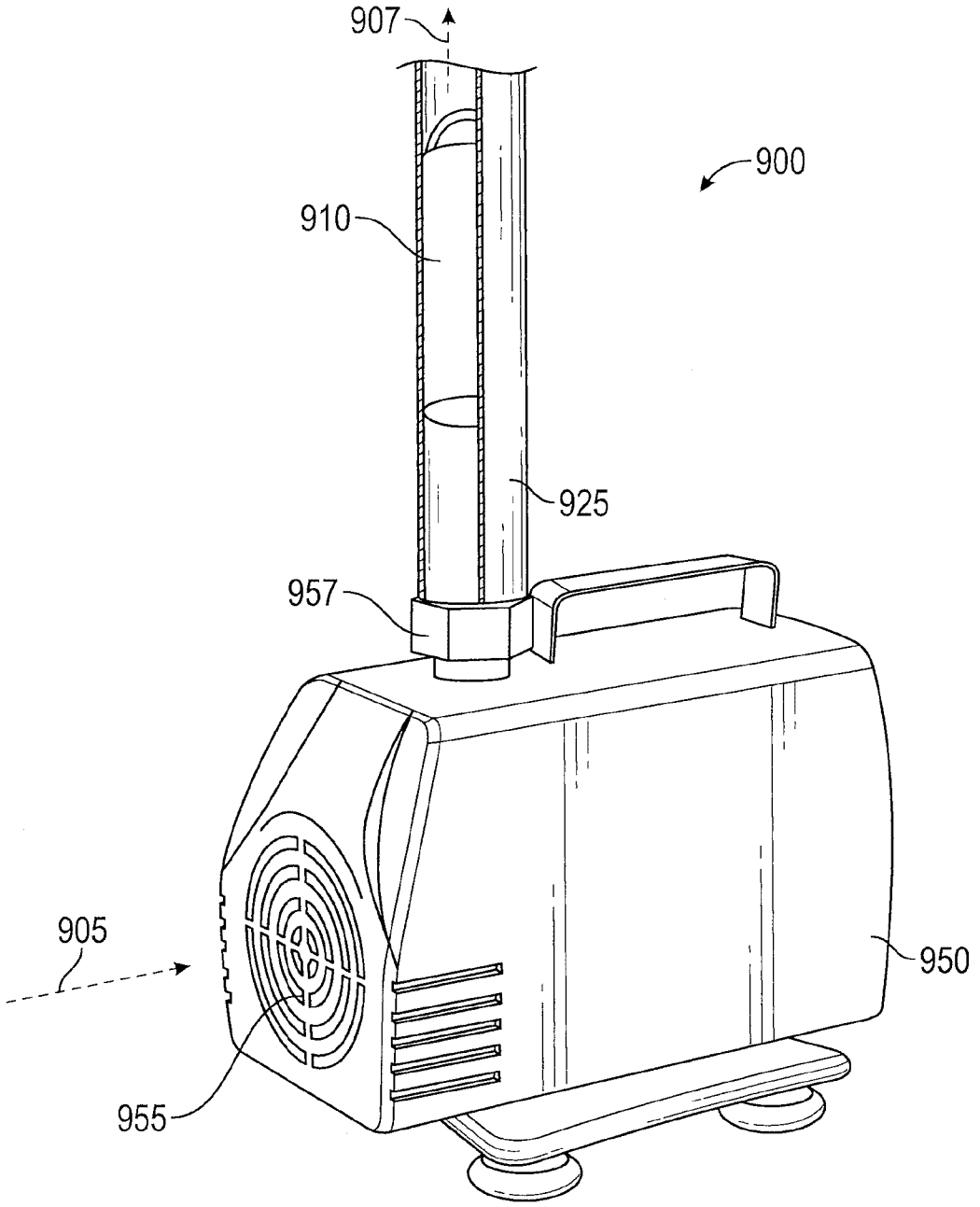

FIG. 9

Date Reçue/Date Received 2020-06-29

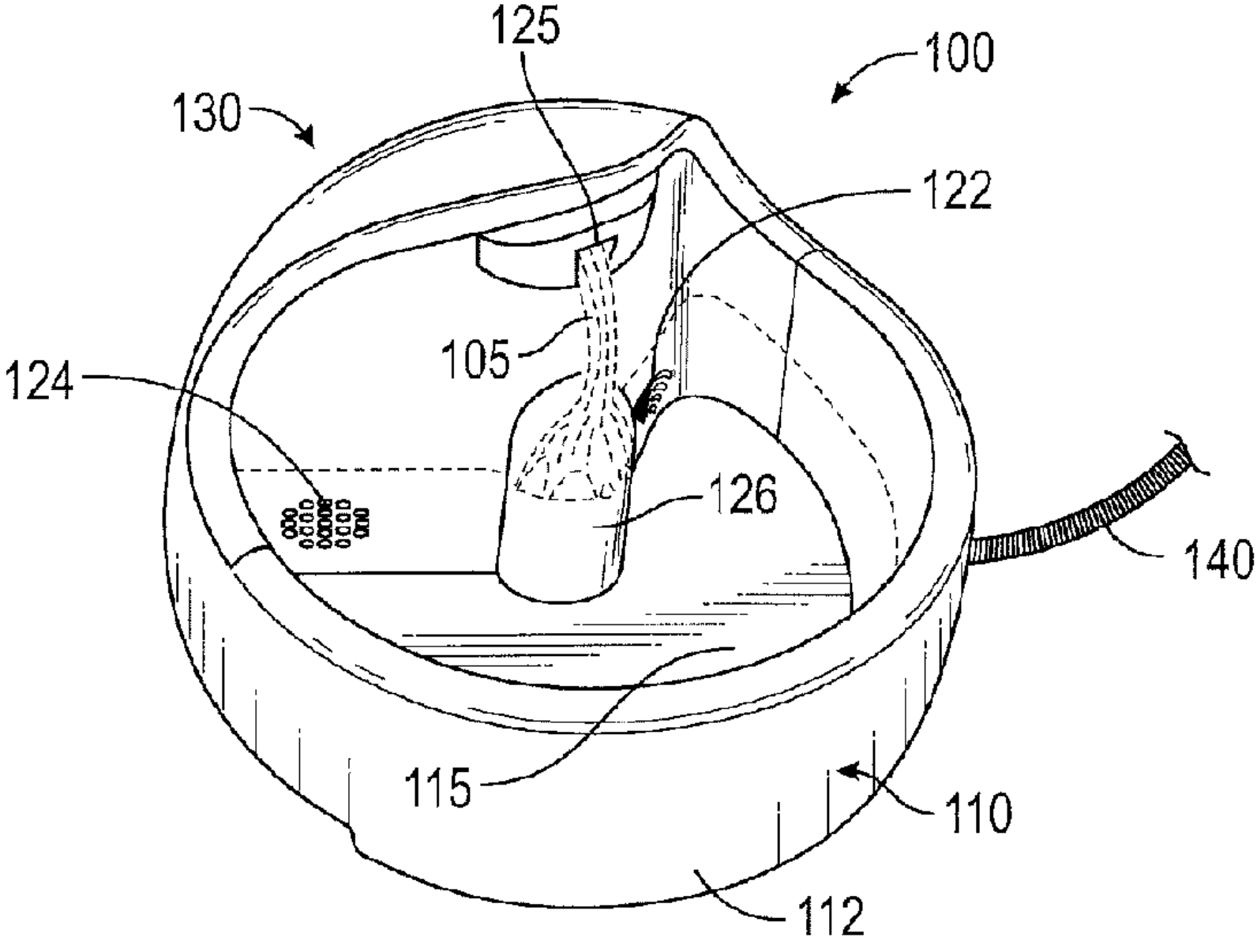
125
100
130
122
105
124
126
140
115
110
112