C. DOERING, Jr.

APPARATUS FOR COATING ARTICLES WITH PULVERULENT MATERIAL.

APPLICATION FILED NOV. 29, 1910.

1,068,863.

Patented July 29, 1913.

4 SHEETS—SHEET 1.

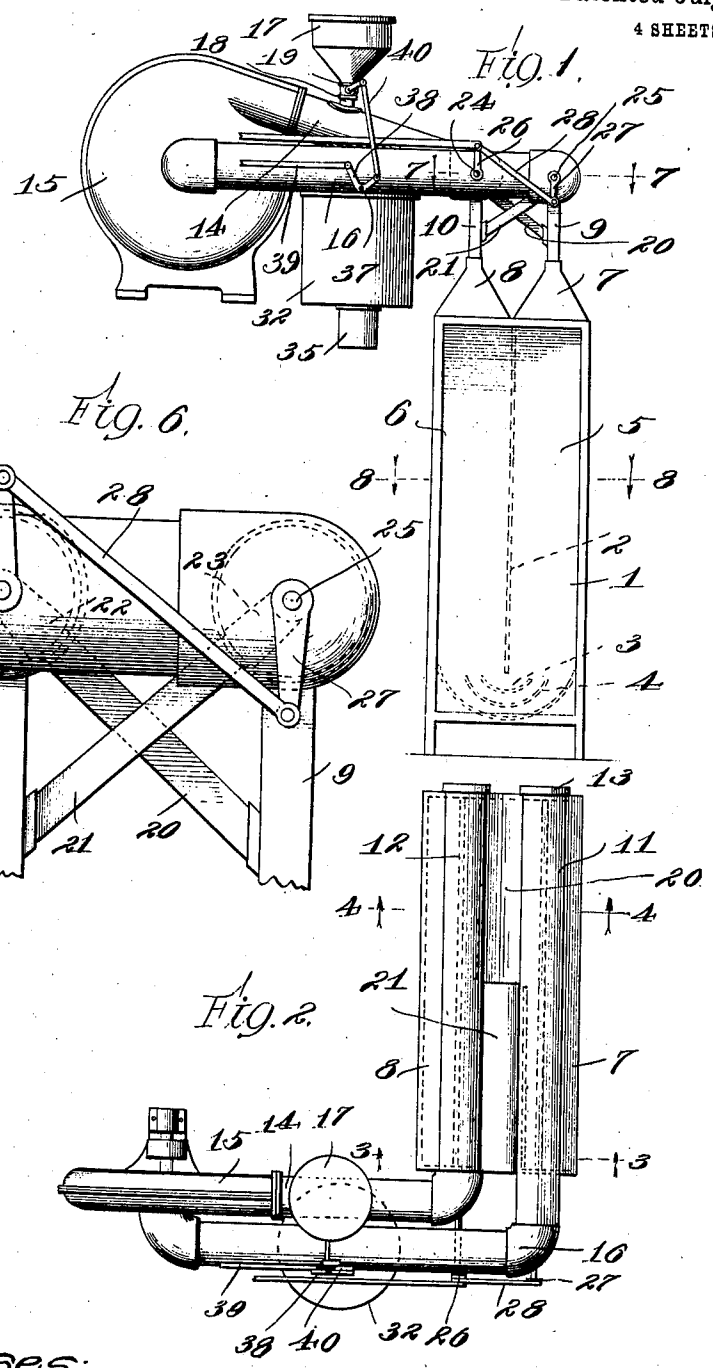

Witnesses:
G. A. Pauberschmidt
G. V. Domarus Jr.

Inventor:
Charles Doering, Jr.
By: Rudolph Wm. Jos.
Atty:

C. DOERING, Jr.

APPARATUS FOR COATING ARTICLES WITH PULVERULENT MATERIAL.

APPLICATION FILED NOV. 29, 1910.

1,068,863. Patented July 29, 1913.

4 SHEETS—SHEET 2.

Fig. 3

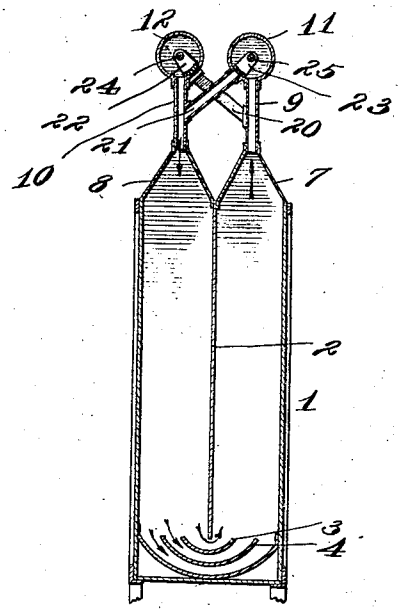

Fig. 4.

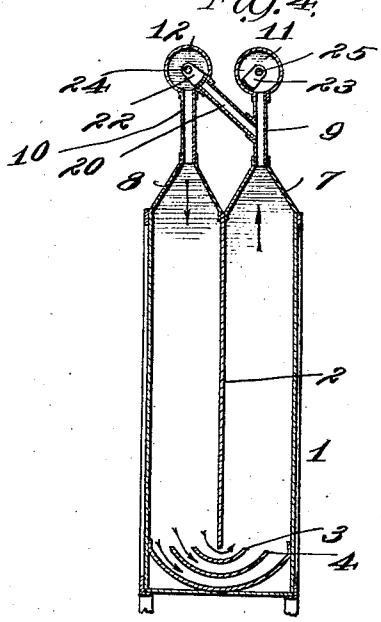

Fig. 7.

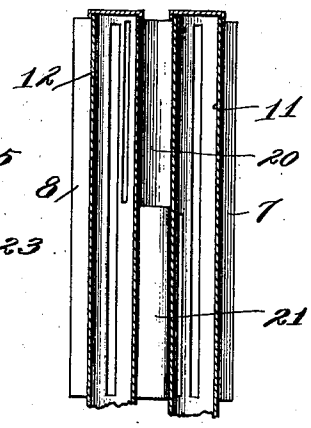

Fig. 8.

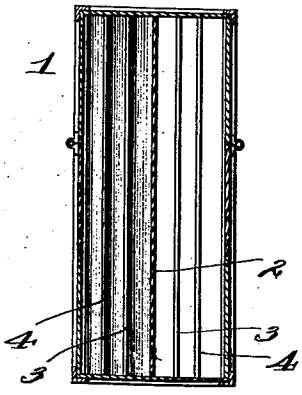

Fig. 5.

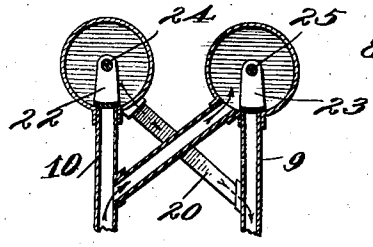

Witnesses:
G. A. Pruberschmidt
F. V. Domarus Jr.

Inventor:
Charles Doering, Jr.
By: Rudolph Mc Koy
Atty:

C. DOERING, Jr.

APPARATUS FOR COATING ARTICLES WITH PULVERULENT MATERIAL.

APPLICATION FILED NOV. 29, 1910.

1,068,863. Patented July 29, 1913.

4 SHEETS—SHEET 3.

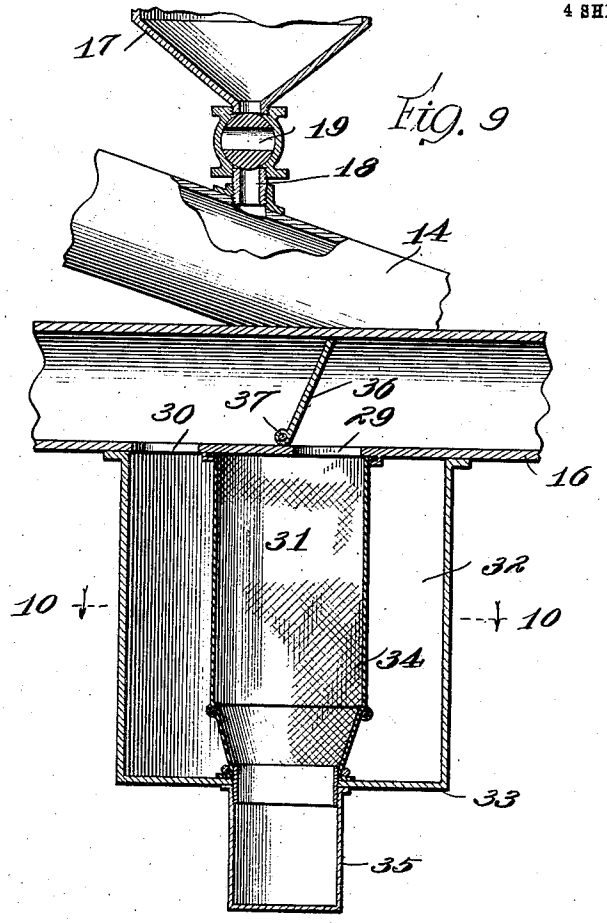

Fig. 9

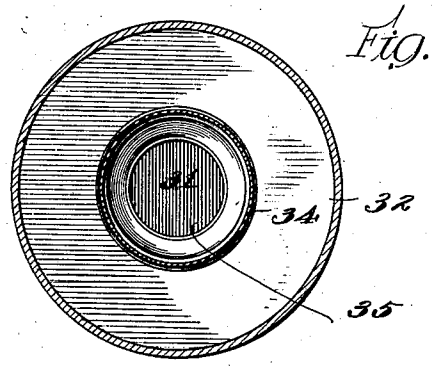

Fig. 10

Witnesses:

G. A. Pauberschmidt

G. V. Domarus Jr.

Inventor:

Charles Doering, Jr.

By: Rudolph Jm. Fox

Atty.

C. DOERING, JR.

APPARATUS FOR COATING ARTICLES WITH PULVERULENT MATERIAL.

APPLICATION FILED NOV. 29, 1910.

1,068,863.

Patented July 29, 1913.

4 SHEETS—SHEET 4.

Fig. 11.

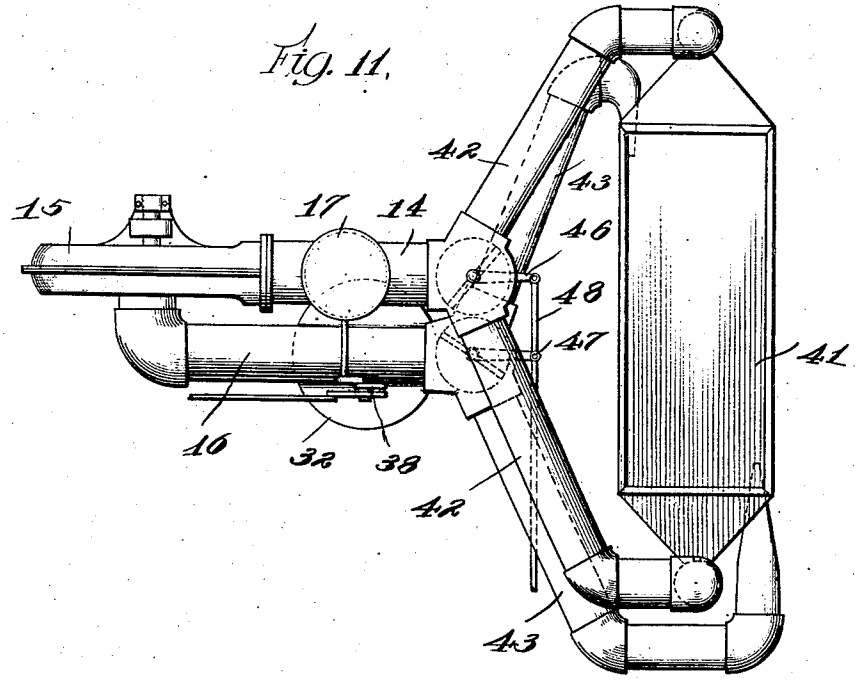

Fig. 12.

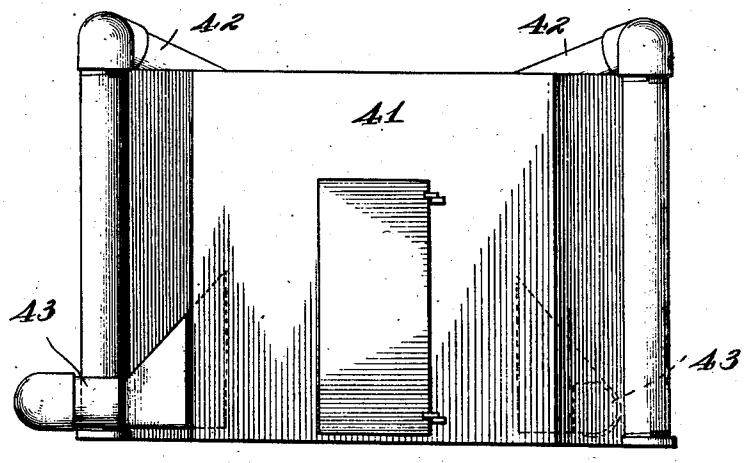

Witnesses:
G. A. Pauberschmidt
G. V. Donnarus Jr.

Inventor:
Charles Doering Jr.
By: Rudolph [illegible]
Atty.

UNITED STATES PATENT OFFICE.

CHARLES DOERING, JR., OF CHICAGO, ILLINOIS, ASSIGNOR TO ADAMS & ELTING CO., OF CHICAGO, ILLINOIS, A CORPORATION OF ILLINOIS.

APPARATUS FOR COATING ARTICLES WITH PULVERULENT MATERIAL.

1,068,863. Specification of Letters Patent. Patented July 29, 1913.

Application filed November 29, 1910. Serial No. 594,796.

To all whom it may concern:

Be it known that I, CHARLES DOERING, JR., a citizen of the United States, residing at Chicago, in the county of Cook and State of Illinois, have invented certain new and useful Improvements in Apparatus for Coating Articles with Pulverulent Material; and I do hereby declare the following to be a full, clear, and exact description of the invention, such as will enable others skilled in the art to which it appertains to make and use the same.

This invention relates to improvements in machines for coating articles with pulverulent material, more generally known as "bronzing machines," the object being to provide a machine in which the bronzing powder or the like is uniformly distributed by means of air currents upon articles previously coated with what is known as a "sizing" to which the powder particles adhere.

The invention consists in the features of construction and combinations of parts hereinafter fully described and claimed.

In the accompanying drawings illustrating the invention: Figure —1— is a view in side elevation of a machine constructed in accordance with my invention. Fig. —2— is a top plan view of the same. Fig. —3— is a vertical section of the same on the line 3—3 of Fig. —2—. Fig. —4— is a similar section on the line 4—4 of Fig. —2—. Fig. —5— is a fragmentary detail sectional view on an enlarged scale of the ducts through which the air currents pass and the dampers controlling the same. Fig. —6— is a fragmentary detail view in end elevation on an enlarged scale showing the said ducts and the damper actuating mechanism. Fig. —7— is a fragmentary detail horizontal section on the line 7—7 of Fig. —1—. Fig. —8— is a detail plan section on the line 8—8 of Fig. —1—. Fig. —9— is a fragmentary detail vertical section on an enlarged scale showing the powder containing hopper and the dust collector forming part of the said machine. Fig. —10— is a detail horizontal section on the line 10—10 of Fig. —9—. Fig. —11— is a plan view of a modified form of construction of the machine. Fig. —12— is a view in side elevation of the same.

My present machine or apparatus has for its main object to provide means whereby the powder carrying air currents may be reversed as to their direction of travel so as to apply the bronze or other coloring or coating powder to the article to be coated uniformly on all parts of the surface thereof, and has for its further object to provide means for ridding the said air currents of the unapplied powder after the article has been coated so that the continued movement of the air currents in contact with and around the coated article will serve to remove therefrom all unapplied powder particles not firmly adhering to the surface thereof.

The machine consists of a receptacle 1 adapted to receive the articles to be coated, the latter being supported or hung therein in any suitable and convenient manner. Said chamber is rendered accessible through a suitable door or doors, the same being omitted from illustration as being readily understood. In the construction shown in Figs. —1— to —8— inclusive, the chamber 1 is divided into two parts or chambers 5 and 6 by means of a partition wall 2, the latter being of less depth than said chamber so as to provide an opening for the passage of air currents from one of the chambers of said receptacle into the other thereof. The bottom 3 of said receptacle 1 is preferably made substantially semi-cylindrical as shown in Fig. —1— and disposed concentric therewith between the same and the lower end of said partition wall 2 are a plurality of segmental plates 3 and 4. Each of the compartments 5 and 6 of the chamber 1 terminates at its upper end in a hood 7 and 8 respectively, which extends the entire length thereof. Each of said hoods communicates through a flat duct 9 and 10 respectively, with the respective horizontal tubes 11 and 12, the latter being longitudinally slotted as shown in dotted lines in Fig. —2— and in full lines in Fig. —7—. Each of said tubes 11 and 12 is closed at one end by means of a cap 13. The tube 12 communicates at its other end with the discharge tube 14 of a blower or other source of supply 15 of air under pressure. The said tube 11 communicates at its other end with the tube 16 connected with the suction end of the blower 15, pump or the like, constituting the source of supply of air under pressure.

Mounted upon the tube 14 is a hopper 17 adapted to contain the coating powder to

be applied to articles contained in the compartments 5 and 6, said hopper communicating with said pipe 14 through the delivery spout 18 controlled by the cock 19, the said powder being fed to said tube 14 by gravity or in any other suitable manner. The tube 12 communicates with the flat duct 9 through an angularly disposed tube 20 and the tube 11 similarly communicates with the duct 10 through an angular tube 21. Dampers 22 and 23 respectively, control the said tubes 9 and 20 and 10 and 21 respectively, so as to enable the air currents to be directed first into the compartment 5 and then through the compartment 6 or vice versa at the will of the operator without interrupting the operation of said blower 15. Said dampers 22 and 23 are mounted upon the crank shafts 24 and 25 respectively, passing centrally through said tubes 11 and 12 and journaled at their ends in the caps 13 and in the elbows connecting said tubes 11 and 12 at their other ends with the tubes 14 and 16 respectively. Each of said crank shafts is equipped at one end with a crank arm 26 and 27 respectively, the same being relatively oppositely disposed and coupled by means of a link 28 to cause said shafts to be simultaneously turned in opposite directions. As shown in Figs. —3—, —4— and —5— said dampers 22 and 23 when turned serve to close the communication of said pipes 20 and 21 with the tubes 11 and 12 simultaneously or interrupt communication of said tubes 9 and 10 therewith. When said dampers are in the position shown in Figs. —3— and —4— they will cause the air currents delivered by the blower into said tubes 11 and 12 to pass into the compartment 6 and through the tube 10 and thence through the compartment 5 and through the tube 9 into the tube 11, and when said dampers are disposed as shown in Fig. —5— they will cause the air to pass from the tube 12 through the tube 21 into the tube 9 and then into the compartment 5 whence the air will pass through the compartment 6, tubes 10 and 21 into the tube 11 and thus back to the blower.

Communicating with the tube 16 at two points between the ends of the same through openings 29 and 30 therein are the two compartments 31 and 32 respectively, of a dust collector 33, the said compartment 31 being separated from the compartment 32 by means of a porous fabric 34 which will permit air to pass therethrough but will filter the powder particles from the air in passage, the said powder particles being adapted to be delivered into a cup 35 suitably removably mounted upon the casing of the dust collector and which communicates with said compartment 31. A damper 36 is disposed in said tube 16 between the openings 29 and 30 establishing communication between the same and said compartments 31 and 32 respectively, of said dust collector, said damper when in the position shown in Fig. —9— being adapted to deflect the air through the opening 29 into the compartment 31 of said dust collector and thus cause same to pass through the fabric 34 into the compartment 32 and from the latter through the opening 30 back into said tube 16 whence said air passes into the suction end of the blower 15. When turned to permit free passage of the air through said tube 16 said damper 36 is adapted to cover and close the said opening 29 so as to prevent the passage of the air into said compartment 31. The said damper 36 is mounted on a shaft 37 projecting through and journaled in openings in the wall of the tube 16 and which at one projecting end is provided with a bell crank lever 38 rigidly mounted thereon at its elbow portion. One arm of said lever 38 is connected by means of a link 39 with suitably located actuating means, the latter being omitted from illustration. The other arm of said bell crank lever 38 is preferably connected by means of a link 40 with the stem of the valve or cock 19 so that when the damper 36 is turned to the position shown in Fig. —9— said valve 19 will be closed.

The operation of the device will probably be fully understood from the foregoing description and, therefore, the same will be only briefly reviewed. The articles to be coated having been placed in the compartments 5 and 6, or in either of them, the said blower 15 is thrown into operation to deliver air at relatively high speed and low pressure into the said tube 12. As soon as the blower attains considerable speed a cock 19 is opened so as to feed coating material into the path of the air current for conveyance by the latter. The powder laden air passes from the tube 12 through the tube 10 into compartment 6 where it impinges upon the contained article to be bronzed and deposits powder thereon. Said powder laden air then passes below the partition wall 2 and through the interstices between the same and the said plates 4 and bottom into the chamber 5 where it impinges upon contained articles to be coated and deposits the powder thereon. Thence it passes through the tube 9 into the tube 11 and through the tube 16 into the suction end of the blower. The damper 36 is at this time down so as to permit free passage of the air through said tube. After the air current has been caused to pass in the aforesaid direction the dampers 22 and 23 are operated to assume the position shown in Fig. —5— whereupon the powder laden air will be caused to pass through the chambers 5

and 6 in the opposite direction. Thus said powder laden air will be caused to impinge upon every point in the surface of each article contained in each of the chambers 5 and 6 and assure a complete coating of the latter. The progress of the work may be readily watched through sight holes which may be provided in the walls of the chamber 1, such sight holes being omitted from illustration, and, as the operator perceives that all portions of the surfaces to be coated are covered he operates the damper 36 to throw the same into the position shown in Fig. —9— and at the same time closes the valve or cock 19. The air is then deflected through the dust collector 33 in which it is freed of the powder carried thereby and the clarified air then passes into the suction end of the blower and is circulated around the coated articles in reverse directions in the same manner as was previously done while the same was powder laden thereby removing from the coated surface all loose particles not firmly adhering thereto, said loose particles being then deposited in the dust collector. After this operation the blower is stopped and the doors or other means of access to the chamber 1 may then be opened immediately and the coated articles removed and replaced by another lot of articles to be coated whereupon the foregoing operation is repeated.

It may be desirable to maintain the damper 36 always in the position shown in Fig. —9— so as to prevent the passage of powder laden air through the blower. In such event the link 40 may be omitted and the valve or cock 19 operated independently of said damper 36 as will be obvious.

In the foregoing construction the chamber 1 is divided into two compartments. My invention may also be applied to a single chamber, as shown in Figs. —11— and —12—, in which the receptacle 41 is connected at either end with a branch 42 of the delivery pipe 14 of the blower 15. The said receptacle 41 is similarly connected at either end with a branch 43 of the pipe 16 communicating with the suction end of the blower. The arrangement of the hopper and dust collector is identical with that hereinbefore shown and described. At the junction of the branches 42 of the pipe 14 with the latter and at the junction of the branches 43 of the pipe 16 with the latter, dampers 44 and 45 respectively, are interposed by means of which the air delivered from the pipe 14 may be deflected to pass through either of said branches 42 at will and the suction pipe 16 may be connected with either of said branches 43. Each of said dampers is actuated by means of a crank 46 and 47 respectively, which are coupled by means of a link 48 to cause said dampers to be moved in unison so that when the damper 44 is turned to deflect the air current into the branch communicating with one end of the receptacle 41 the damper 45 will be simultaneously turned to connect the suction pipe 16 with the branch 43 communicating with the opposite end of said receptacle 41. Thus the direction of travel of the air current through the chamber or receptacle 41 may be reversed at will with the same result as previously described in connection with Figs. —1— to —10— inclusive.

I claim as my invention:

1. A machine of the kind specified, comprising a closed chamber adapted to receive articles to be coated, a blower, ducts establishing communication between said blower at its suction and delivery ends respectively with said chamber at different points for causing air to pass from end to end therethrough, devices controlling said communication for reversing the direction of travel of the air through said chamber a dust collector disposed between the ends of one of said ducts connecting said chamber with said blower, and means for deflecting air in passage between said chamber and said blower through said dust collector.

2. A machine of the kind specified, comprising a closed chamber adapted to receive articles to be coated, a blower, a pipe communicating with the delivery end of said blower, ducts establishing communication between said pipe and said chamber at two points, a pipe communicating with the suction end of said blower, ducts establishing communication between said pipe and chamber at two points, dampers controlling all of said ducts for causing the delivered air to enter said chamber through either of the two last-named whereby the direction of travel of the air through said chamber may be varied and means for supplying coating material to the air.

3. A machine of the kind specified, comprising a closed chamber adapted to receive articles to be coated, a blower, a pipe communicating with the delivery end of said blower, ducts establishing communication between said pipe and said chamber at two points, a pipe communicating with the suction end of said blower, ducts establishing communication between said pipe and chamber at two points, dampers controlling all of said ducts for causing the delivered air to enter said chamber through either of the two last-named, whereby the direction of travel of the air through said chamber may be varied, and a single lever for simultaneously actuating all of said dampers and means for supplying coating material to said air.

4. A machine of the kind specified, comprising a closed chamber adapted to receive articles to be coated, a blower, ducts estab-

lishing communication between said blower at its suction and delivery ends respectively with said chamber at different points for causing air to pass from end to end therethrough, devices controlling said communication for reversing the direction of travel of the air through said chamber, a dust collector disposed between said chamber and the suction end of said blower, means for deflecting the air passing from said chamber to said blower to pass through said dust collector and means for supplying coating material to said air.

5. A machine of the kind specified, comprising a closed chamber adapted to receive articles to be coated, a blower, ducts establishing communication between said blower at its suction and delivery ends respectively with said chamber at different points for causing air to pass from end to end therethrough, devices controlling said communication for reversing the direction of travel of the air through said chamber, a dust collector communicating with the duct connecting the suction end of said blower with said chamber, a damper in said duct for causing the air passing therethrough to pass through the said dust collector and means for supplying coating material to said air.

6. A machine of the kind specified, comprising a closed chamber adapted to receive articles to be coated, a blower, ducts establishing communication between said blower at its suction and delivery ends respectively with said chamber at different points for causing air to pass from end to end therethrough, devices controlling said communication for reversing the direction of travel of the air through said chamber, a dust collector communicating with the duct connecting the suction end of said blower with said chamber, a damper in said duct for causing the air passing therethrough to pass through the said dust collector, and a receptacle for coating material communicating with the delivery duct from said blower, a valve controlling the same, a single lever for simultaneously actuating said damper and said valve for closing the latter when said damper is turned to cause the air to pass through said dust collector.

7. A machine of the kind specified, comprising a closed chamber adapted to receive articles to be coated, a blower, ducts connecting said blower at its suction and delivery ends respectively with said chamber at two points each, a receptacle for coating material located to deliver said material into the air current delivered from said blower, a valve controlling said receptacle, dampers controlling said ducts for reversing the direction of travel of air currents through said chamber, a dust collector disposed between said chamber, and the suction end of said blower, and means for causing the air passing from said chamber to said blower to pass through said dust collector.

8. A machine of the kind specified comprising a closed chamber adapted to receive articles to be coated, a blower, pipes connected with the suction and delivery ends thereof respectively, a duct establishing communication between each of said pipes and said chamber respectively at different points in the latter, a duct connecting the suction pipe with the duct connecting the delivery pipe with said chamber, a duct connecting the delivery pipe with the duct connecting the suction pipe with the chamber, a damper in each of said pipes for controlling the communication thereof with said respective ducts connected therewith, a single lever for simultaneously actuating both said dampers, whereby the direction of travel of air through said chambers may be reversed and means for supplying coating material to said air.

In testimony whereof I have signed my name in presence of two subscribing witnesses.

CHARLES DOERING, Jr.

Witnesses:

HENRY H. DOERING,

JOHN H. BAUMGARTNER.