June 3, 1958 H. G. WARREN 2,837,396

PROCESS AND APPARATUS FOR EVACUATING ELECTRONIC TUBES AND THE LIKE

Filed June 16, 1953 5 Sheets-Sheet 1

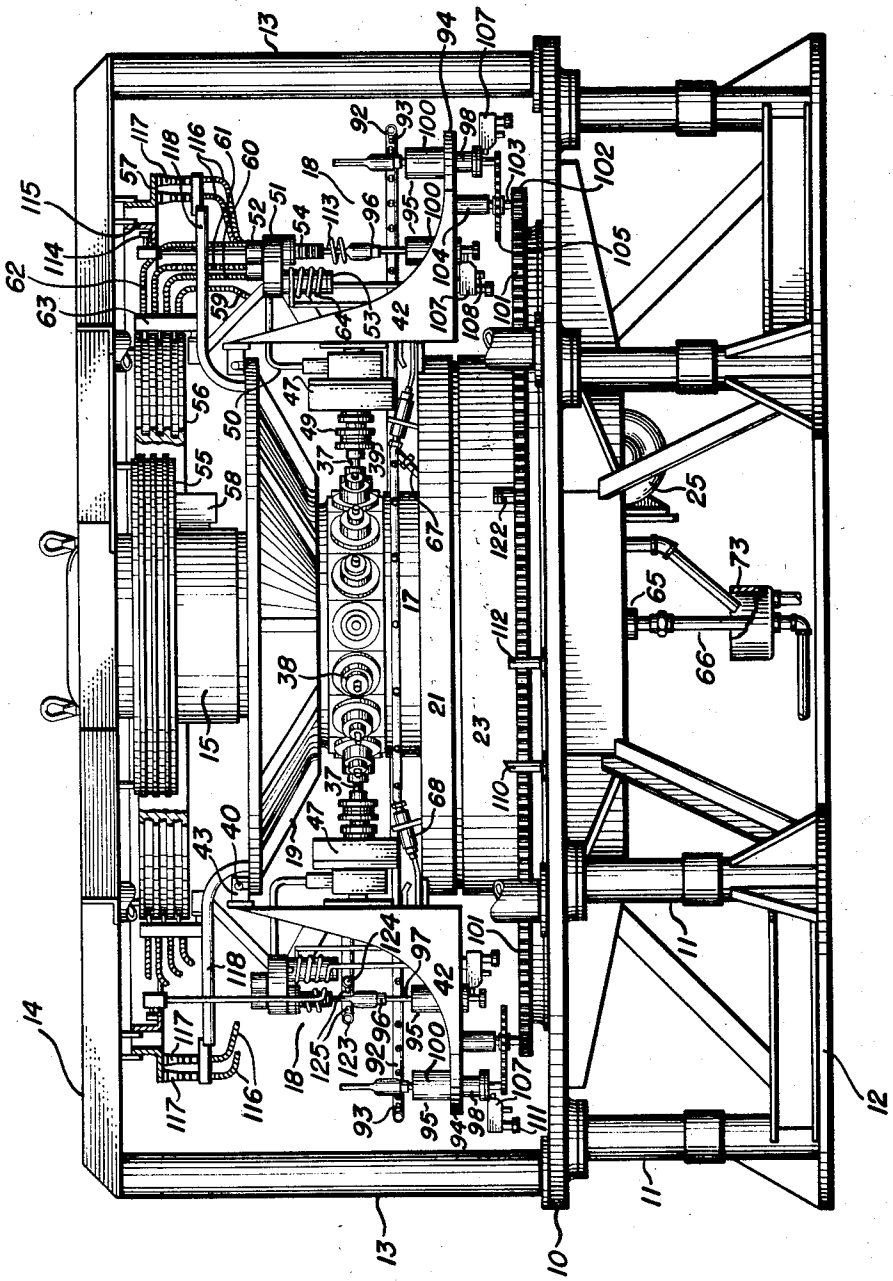

FIG. 1

HORACE G. WARREN
INVENTOR.

BY Horace G. Warren
George W. Peterson
ATTORNEYS

June 3, 1958 H. G. WARREN 2,837,396

PROCESS AND APPARATUS FOR EVACUATING ELECTRONIC TUBES AND THE LIKE

Filed June 16, 1953 5 Sheets-Sheet 2

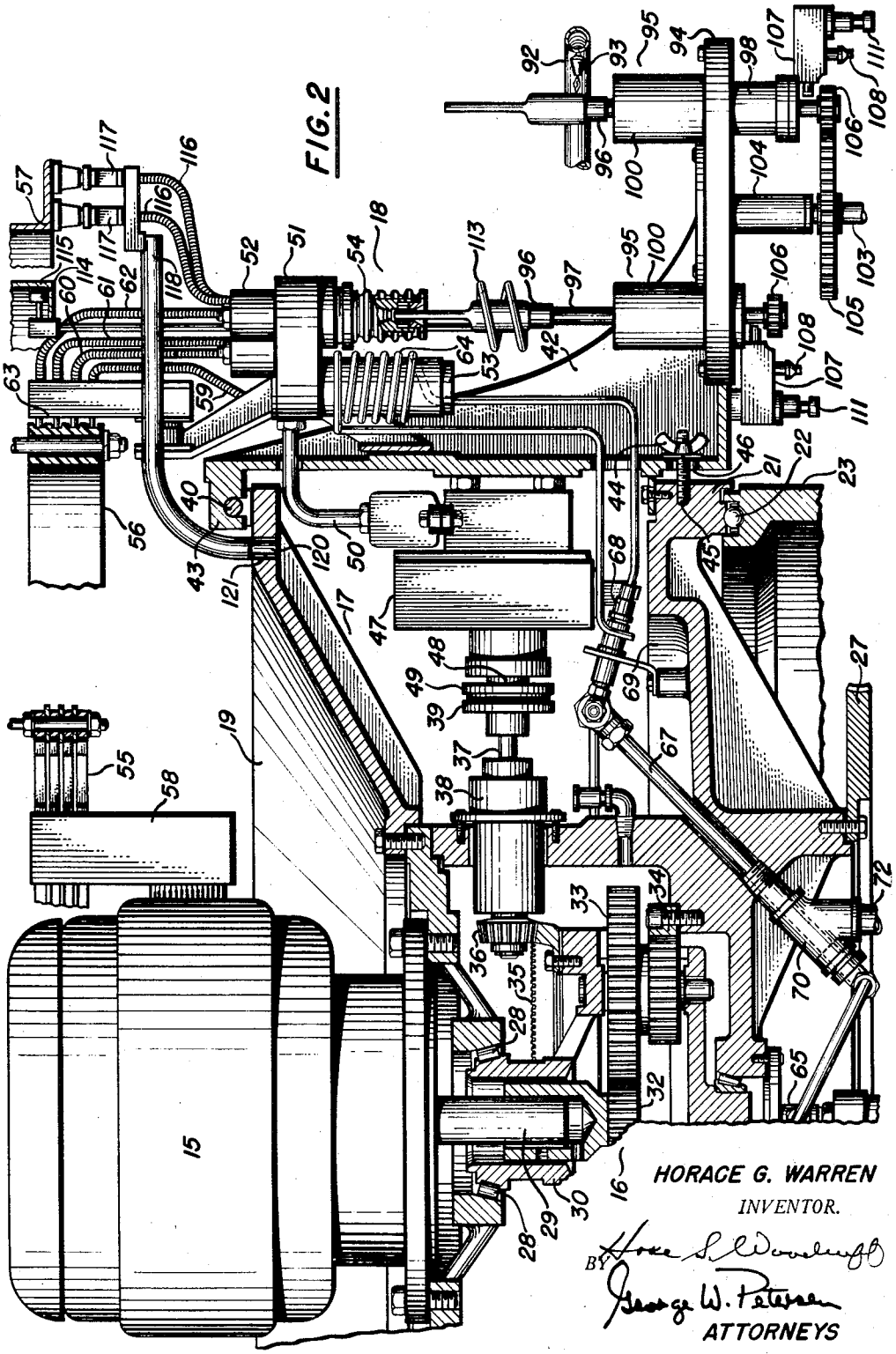

FIG. 2

HORACE G. WARREN
INVENTOR.

BY Horace S. Woodruff
George W. Petersen
ATTORNEYS

June 3, 1958 H. G. WARREN 2,837,396

PROCESS AND APPARATUS FOR EVACUATING ELECTRONIC TUBES AND THE LIKE

Filed June 16, 1953 5 Sheets-Sheet 3

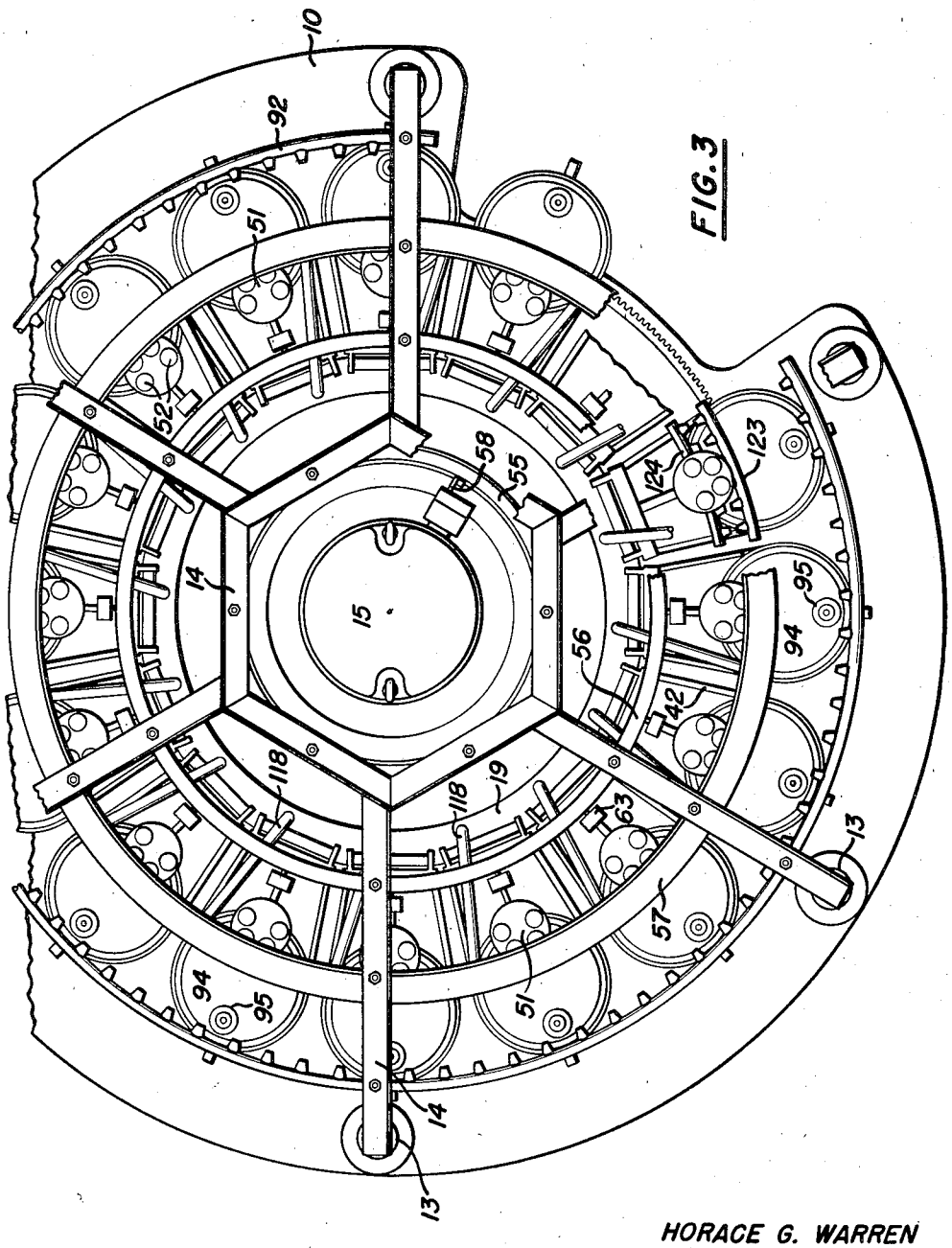

FIG. 3

HORACE G. WARREN
INVENTOR.

BY Horace G. Warren
George W. Peterson
ATTORNEYS

June 3, 1958 H. G. WARREN 2,837,396

PROCESS AND APPARATUS FOR EVACUATING ELECTRONIC TUBES AND THE LIKE

Filed June 16, 1953 5 Sheets-Sheet 4

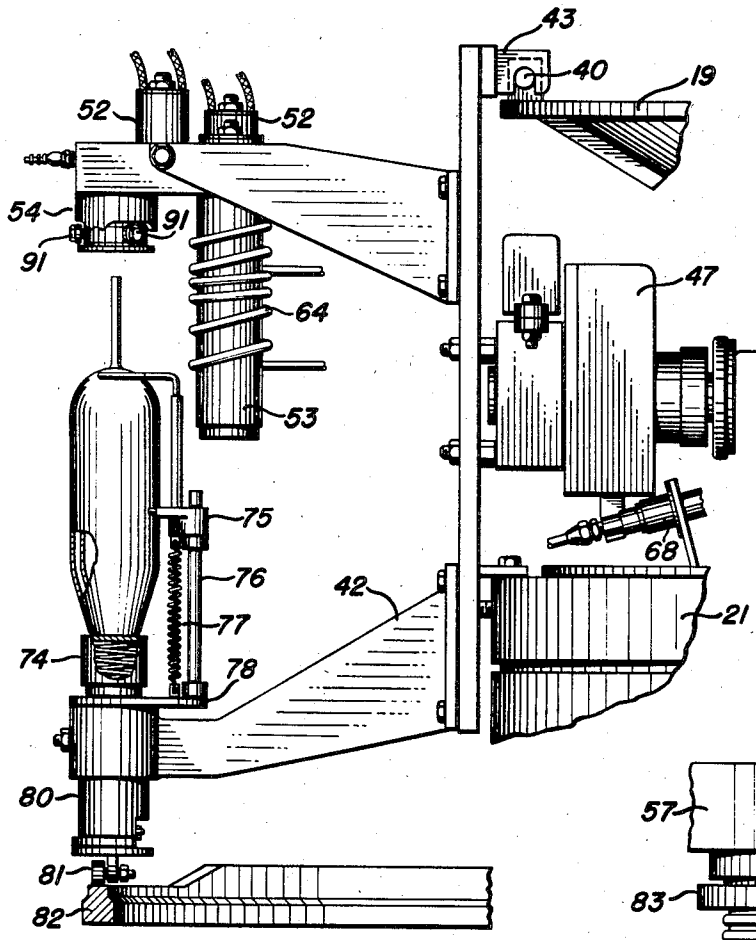

FIG. 4

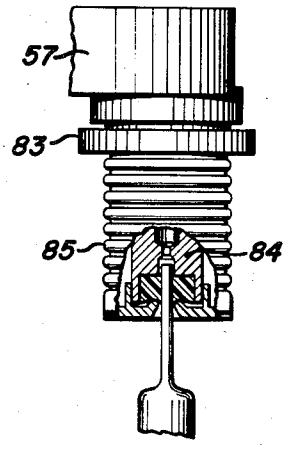

FIG. 6

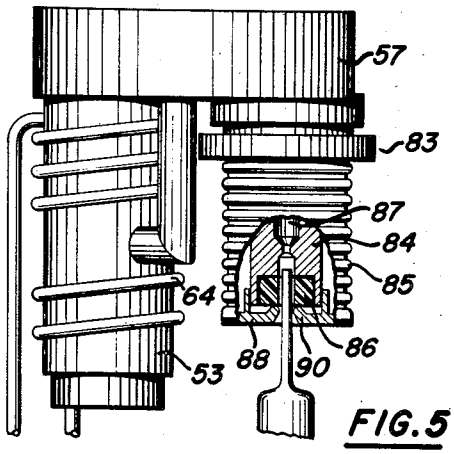

FIG. 5

HORACE G. WARREN
INVENTOR.

BY Horace G. Warren
George W. Peterson
ATTORNEYS

June 3, 1958 H. G. WARREN 2,837,396
PROCESS AND APPARATUS FOR EVACUATING
ELECTRONIC TUBES AND THE LIKE
Filed June 16, 1953 5 Sheets-Sheet 5

FIG. 8

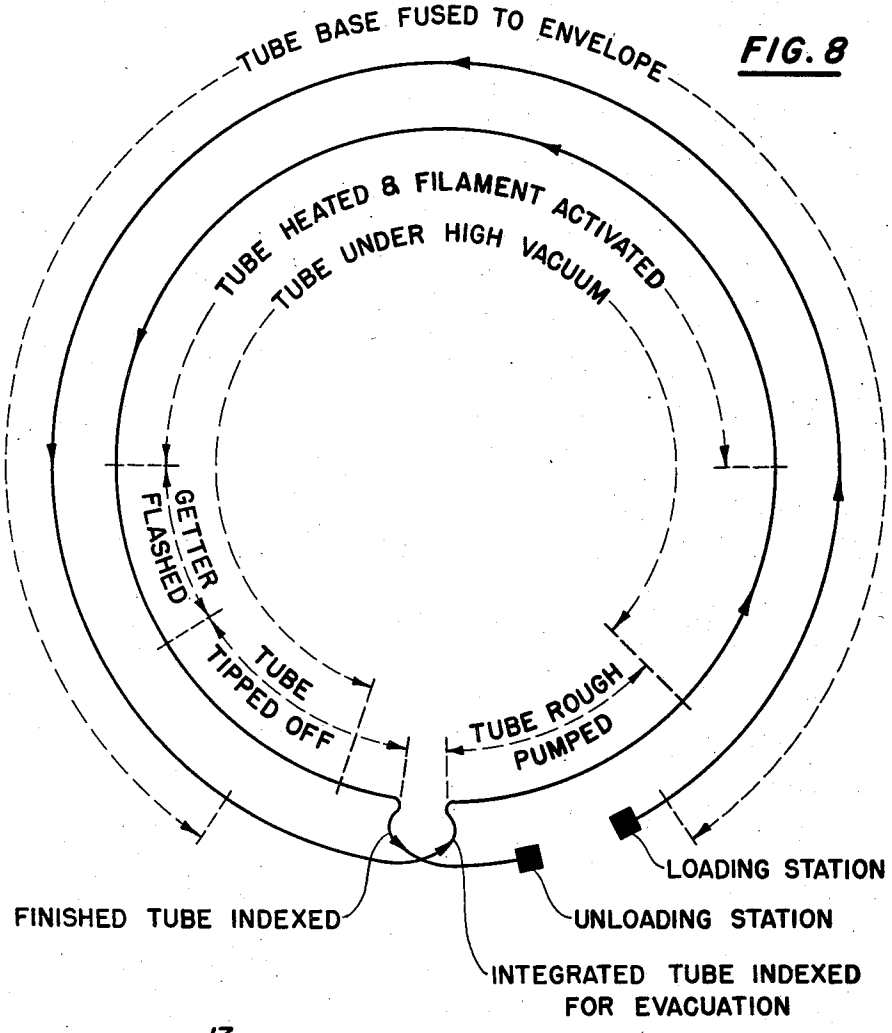

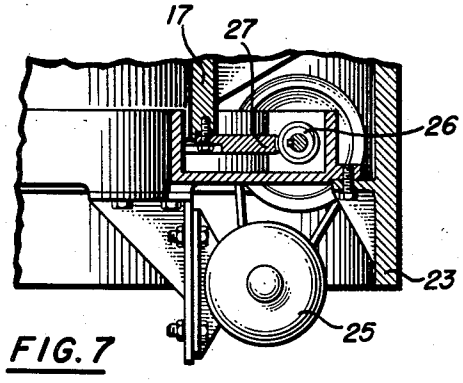

FIG. 7

HORACE G. WARREN
INVENTOR.
BY Horace S. Woodling
George W. Peterson
ATTORNEYS

United States Patent Office

2,837,396

Patented June 3, 1958

2,837,396

PROCESS AND APPARATUS FOR EVACUATING ELECTRONIC TUBES AND THE LIKE

Horace G. Warren, Rochester, N. Y., assignor, by mesne assignments, to Consolidated Electrodynamics Corporation, Pasadena, Calif., a corporation of California

Application June 16, 1953, Serial No. 362,070

7 Claims. (Cl. 316—31)

This invention relates to the manufacture of vacuum tubes and similar hollow evacuated articles and is particularly concerned with a method and apparatus for processing hollow articles which are to be evacuated and sealed under high vacuum.

Many articles, such as electronic tubes, Thermos bottles, switches and the like, depend for successful operation upon evacuation during processing with the articles being sealed while evacuated or back-filled with a suitable fluid following evacuation and then sealed. The demands for large scale production of such articles necessitates the use of processing apparatus capable of high speed, large volume operation. Many diverse apparatus have been constructed for evacuating and sealing but, for the most part, such apparatus has suffered the disadvantages of being highly complex and hence difficult to service and maintain in continuous service, of having inadequate provisions for rejecting defective articles, of having failure of a single article deleteriously affect the processing of some or all of the other articles being processed and of necessitating shut-down of the entire apparatus upon failure of any of the component elements. In addition, many of the prior apparatus required indexing of the apparatus with a consequent loss in time due to intermittent processing through the cycle, and interruption of the evacuation. Furthermore, the indexing operation made correlation of the various processing steps a difficult and complex problem and limited the versatility of the apparatus so that a change in the size or the type of article being processed necessitated extensive revision of the apparatus with a consequent loss in production time.

It is accordingly an object of this invention to provide novel and greatly improved apparatus for processing hollow articles which are to be evacuated and sealed during the processing cycle.

It is another object of the invention to provide improved rotary evacuating apparatus capable of high speed large volume production.

It is a further object of the invention to provide novel evacuating apparatus capable of continuous cyclic operation and free of the disadvantages inherent in indexing apparatus.

Another object of the invention is to provide evacuating apparatus of improved versatility and capable of being adapted for processing of various sized hollow articles without necessitating the extensive revisions required heretofore.

Another object of the invention is to provide apparatus of improved construction from the standpoint of service and maintenance and adapted for repair and maintenance of the parts most subject to mechanical failure without seriously interrupting the operation of the apparatus.

Another object of the invention is to provide new and improved apparatus for simultaneously processing a multiplicity of articles without the failure of one of such articles affecting the processing of the remainder of such articles.

Another object of the invention is to provide new and improved rotary apparatus for evacuating a plurality of

tubes or similar hollow articles continuously throughout the evacuating cycle and for sealing off the evacuated tubes without interrupting the processing cycle of the remaining tubes.

Another object of the invention is to provide an improved and removable exhaust head for rotary exhausting apparatus.

Another object of the invention is to provide evacuating apparatus having a plurality of individually removable complete exhaust heads, individual pumping units included in each exhaust head, and a single mechanical drive mechanism for all of the pumping units.

Another object of the invention is to provide a new and improved process for evacuating and sealing electronic tubes and similar hollow articles.

Another object of the invention is to provide a new and continuous method for simultaneously processing a plurality of vacuum tubes or the like.

Other objects will be apparent from the drawings and from the description and claims which follow.

These and other objects are attained by means of this invention as described more fully hereinafter with particular reference to certain preferred embodiments as illustrated in the drawings.

In general, the apparatus embodying this invention comprises a stationary, generally circular, raised base plate and supporting frame on which a rotatable carriage is centrally mounted. The rotatable carriage includes a shell, a planetary gear assembly enclosed within the shell and geared to a motor mounted within the shell and a ring gear arranged to engage a worm gear mounted on the base plate and adapted to rotate the entire carriage. The rotatable carriage rides on an annular track on the base plate. The upper portion of the shell serves as a support from which are hung a plurality of exhaust heads evenly spaced around the periphery of the shell.

Each exhaust head comprises an outwardly facing frame hanging from the rotatable shell, and each such frame carries a holding fixture for positioning the article to be evacuated, an exhauts socket for receiving the neck of the article to be evacuated, and an individual pumping system connected to such exhaust socket. Each pumping system includes a mechanical backing pump, a high vacuum diffusion pump, and a suitable valve and conduit assembly arranged so that the mechanical backing pump can act first as a roughing pump in direct connection with the exhaust socket and then as a backing pump for the diffusion pump when the diffusion pump is connected to the exhaust socket. Each mechanical vacuum pump has a drive shaft which projects inwardly towards the rotatable shell and carries a clutch plate on its inner end.

The rotatable shell carries similar drive shafts for each exhaust head, with the inner end of each such drive shaft being geared to the central planetary gear assembly and the outer end carrying a clutch plate adapted to engage the clutch plate on the mechanical pump aligned therewith. Annular bus bars are mounted on the supporting frame which in turn rests on the base plate and overlies the rotatable carriage. These bus bars carry current for operating the motor, the diffusion pumps, and other electrically operating elements on the carriage such as high frequency induction coils which are included on the exhaust heads when vacuum tubes are being processed. Current is supplied to those various elements by means of sliding contacts which move along the bus bars and are connected to the various elements by means of suitable leads. The motor and planetary gear assembly which form a part of the rotatable carriage rotate with the rotatable carriage. The motor drives the planetary gear assembly within the rotatable shell at a speed sufficient to operate the mechanical vacuum pumps when the clutch plates are engaged. Operation of the mechanical vacuum

pumps is thus independent of the rotation of the carriage and the pumps can be operated with the rotatable carriage moving or stopped.

Cooling water for the diffusion pumps on the exhaust heads is continuously supplied during rotation of the carriage by means of a central water supply line which has a rotary cap to which are connected water lines leading to the cooling coils of the diffusion pumps on the various exhaust heads. Each such water line connecting the central supply line to the exhaust head, rotates with the rotatable carriage; and each line has a slip fit automatically valved union adjacent to the exhaust head so that the water lines can be readily connected and disconnected when the exhaust heads are removed from the carriage or replaced thereon. The used cooling water drains from the cooling coils on the diffusion pumps into a gutter on the carriage, and the gutter discharges into a sump below the base plate.

In operation, a plurality of hollow articles are processed simultaneously and sequentially without interruption of the evacuating cycle. In operating the apparatus, an article to be processed is placed in the holding fixture on an exhaust head at a loading position. As the exhaust head moves away from the loading position, the holding fixture is raised until the neck of the article to be evacuated enters the exhaust socket. In the usual processing cycle involving continuous operation of the apparatus, the loading is done by an operator at the loading position while the carriage is continuously rotating whereby a plurality of articles are processed in sequence. When the neck of the article to be evacuated is in the exhaust socket, the socket is closed to give a vacuum tight seal around the neck of the article, as described more fully hereinafter with reference to the preferred embodiments shown in the drawings. When the article is sealed into the exhaust socket, the mechanical pump, which operates continuously, is connected directly to the exhaust socket by means of a solenoid valve and begins the evacuation of the article. The rough pumping continues through a predetermined portion of the cycle sufficient to evacuate the article to a pressure at which the diffusion pump is effective. At this point, a suitable solenoid valve is actuated whereby the diffusion pump is automatically connected to the exhaust socket and the mechanical pump is switched to act as a backing pump for the diffusion pump. High vacuum evacuation then proceeds through the remainder of the evacuating cycle until the article is tipped off and removed at the unloading position adjacent the loading position. The exhaust head is then ready to receive an unprocessed article for evacuation.

The article being evacuated is tipped off after completion of the evacuating cycle by means of a suitable tip off assembly mounted on the apparatus adjacent the unloading position. In the case of glass articles, such as glass vacuum tubes, Thermos bottles and the like, the tip off assembly desirably comprises a bank of burner jets positioned adjacent the path of travel of the exhaust heads so that the articles pass through the burner flames following evacuation and the neck portion of the article is tipped off. The vacuum pumping of the tube continues until the tip off operation is completed.

The evacuation and tip off of the articles thus proceeds continuously and automatically with a plurality of articles being processed simultaneously and sequentially. Since each article being evacuated has its own individual pumping system, a leak in the article or failure of any part of the exhaust head assembly in no way affects the remaining articles being processed.

In many cases and particularly with vacuum tubes, the processing cycle desirably includes a preliminary cycle for sealing together a tube envelope and a tube base prior to the evacuating and tip off cycle. In such case, a dual-position holding fixture is employed as a part of the exhaust head. The holding fixture is adapted to first carry the tube components through a sealing operation during an initial cycle and then index the integrated tube into engagement with the exhaust socket for the evacuating and tip off cycle. In such case, each article being processed goes through two complete revolutions of the rotatable carriage during the processing cycle. The sealing operation which fuses the tube envelope to the tube base is accomplished by passing the assembled components of the tube past a sealing assembly. The sealing assembly desirably consists of a burner tube encircling a major portion of the circumference of the apparatus and having burner jets spaced along its extent so that the tube components are heated, fused, and annealed while making the first complete revolution around the apparatus. The sealing assembly is spaced from the exhaust socket, either laterally or vertically, so that the sealing operation does not interfere with the evacuating and tip off cycle, and one batch of tubes can sealed while another batch of tubes is being evacuated and tipped off. In a preferred embodiment, each exhaust head includes two holding fixtures arranged so that one fixture is in sealing position while the other fixture on the same exhaust head is in the evacuating position. In such case the apparatus includes an automatically indexing assembly which moves the fixtures from the sealing bank to the evacuating bank without interrupting the continuous rotation of the carriage.

The apparatus embodying this invention thus includes an individual exhaust head assembly for each article being evacuated, a separate pumping system on each exhaust head, and a single drive mechanism for all of the mechanical vacuum pumps. Each exhaust head can be removed from the rotatable carriage for repair or servicing without seriously interrupting the operation of the apparatus and without in any way affecting the processing on adjacent exhaust heads.

The invention is best understood with particular reference to certain preferred embodiments thereof as illustrated in the drawings.

Of the drawings:

Fig. 1 is a view in elevation, partly broken away for clarity, of a multiple head rotary exhausting apparatus which constitutes a preferred embodiment of the invention and which is particularly adapted for processing vacuum tubes;

Fig. 2 is an enlarged fragmentary view in elevation, partly broken away and in section, of an exhaust head in position on the rotatable carriage of the apparatus shown in Fig. 1, the shell being broken away to show the construction of the driving mechanism for the mechanical pumps;

Fig. 3 is a fragmentary plan view, partly broken away for clarity, of the apparatus shown in Fig. 1;

Fig. 4 is a fragmentary view in elevation of an alternative exhaust head assembly suitable for use in apparatus embodying the invention and particularly adapted for processing articles such as Thermos bottles which require only evacuation and tipping off;

Fig. 5 is a fragmentary view in elevation, partly broken away and in section, of an exhaust socket, valve block and diffusion pump forming a part of a preferred exhaust head assembly, the exhaust socket being shown in the open position;

Fig. 6 is a fragmentary view in elevation, partly broken away and in section, of the exhaust socket shown in Fig. 5, the exhaust socket being shown in the closed position;

Fig. 7 is a fragmentary view in elevation, partly broken away and in section, of the worm drive mechanism for rotating the rotatable carriage of the apparatus shown in Fig. 1; and

Fig. 8 is a diagrammatic representation of a typical vacuum tube processing cycle embodying the invention.

Referring particularly to Figs. 1 and 2, the apparatus has a generally circular base plate **10** of heavy steel

mounted at a convenient height on steel legs 11, 11 which in turn are mounted on a plate 12 which is bolted or otherwise secured to the floor. Posts 13, 13 mounted on base plate 10 carry a skeletal frame 14 of L-beams which overlies the apparatus proper.

A rotatable carriage assembly is mounted for rotation on the center of base plate 10 and includes a motor 15 geared to a planetary gear assembly 16, a rotatable shell 17 surrounding the planetary gear assembly 16, and a plurality of exhaust head assemblies 18, 18 hung from the periphery of a flared upper portion 19 of shell 17. The entire rotatable carriage is supported by a marginal annular flange 21 of shell 17 which rides on bearings 22, 22 seated in a corresponding annular flange 23 mounted on base plate 10. Flange 23 thus serves as a track upon which the rotatable carriage rides, flange 21 having a peripheral lip which overlies the margin of track 23 and maintains proper positioning of the rotatable carriage upon track 23. The entire rotatable carriage including motor 15, planetary gear assembly 16, shell 17, and the removable exhaust assemblies 18, 18 are rotated as a unit by means of motor 25 mounted on base plate 10 and arranged for driving worm gear 26 which engages ring gear 27 on shell 17. The driving mechanism for the rotatable carriage is illustrated in Fig. 7 of the drawings.

The planetary gear assembly 16 is mounted for independent rotation within shell 17 by means of needle bearings 28, 28, and drive shaft 29 of motor 15, which engages gear assembly 16, is journalled in housing 30 which is integral with the planetary gear assembly 16. Motor drive shaft 29 carries a spindle gear 32 which engages a reducing gear cluster, as shown at 33 on Fig. 2, and this gear cluster engages a ring gear 34 on shell 17. The planetary gear assembly 16 thus rotates with the rotatable carriage and also rotates within shell 17 and the operation of the planetary gear assembly 16 is independent of the rotation of the carriage. The planetary gear assembly in turn engages a ring gear 35 which rotates a spindle gear 36 mounted on the inner end of each of a plurality of drive shafts 37, 37 journalled in housings 38, 38 in shell 17 and aligned with the various exhaust assemblies 18, 18 as described more fully hereinafter. Each drive shaft 37 projects outwardly beyond shell 17 toward the associated exhaust head assembly 18 and has a clutch plate 39 mounted on its outer end. Drive shafts 37, 37 are thus all driven simultaneously by motor 15 through planetary gear assembly 16 and the rotation of the drive shafts is independent of the rotation of the carriage by motor 25.

The flared upper portion or dished head 19 of shell 17 has a plurality of ball supports 40, 40 mounted at evenly spaced positions around its periphery from which the exhaust head assemblies 18, 18 are hung. Each exhaust head assembly 18 comprises a generally L-shaped frame 42 with a hanger socket 43 at the top of the frame adapted to engage a ball support 40 on shell 17. The frame 42 faces outwardly and the lower end of each frame 42 rests against the periphery of shell 17. The frame is desirably pinned in place by means of a wing nut 44 screwed onto a threaded stud 45 mounted on the shell flange 21, stud 45 being adapted to project through an opening 46 on frame 42 when the frame is hung in position on the dished head 19.

An individual mechanical vacuum pump 47 is bolted or otherwise secured to the inner face of each frame 42 with the drive shaft 48 of each such pump projecting inwardly toward shell 17 and aligned with a drive shaft 37 which is geared to the planetary gear assembly 16. Each mechanical pump drive shaft 48 carries a clutch plate 49 which is adapted to engage the clutch plate 39 on the drive shaft 37 aligned therewith when the exhaust head assembly 18 is hung in position on the dished head 19. Clutch plates 39 and 49 are of conventional design and can be either frictionally engaging plates of rubber or other suitable material but desirably are metal plates with complementary ribs and grooves arranged for positive engagement. All of the mechanical pumps 47, 47 are thus driven by motor 15 and can be operated whether the rotatable carriage is moving or not. The mechanical pumps 47, 47 automatically disengage when the exhaust head frames 42, 42 are swung outwardly for removal from ball supports 40, 40.

The inlet port of each mechanical pump 47 is connected by a vacuum conduit 50 to a valve block 51 mounted on the outer face of frames 42, each valve block 51 being operated by a double solenoid valve 52 as described more fully hereinafter. A diffusion pump 53 and exhaust socket 54 are mounted in depending relation from each valve block 51. The valve block 51 and solenoid valve 52 are constructed to connect the exhaust socket 54 directly to mechanical pump 47 during the rough pumping portion of the processing cycle and to connect the diffusion pump 53 directly to the exhaust socket 54 during the high vacuum pumping cycle, the mechanical pump 47 being valved to operate as a backing pump for diffusion pump 53 in the latter case.

Three concentric annular bus bars 55, 56 and 57 are mounted on frame 14 above the rotatable carriage. Inner bus bar 55 carries current for operating motor 15, current being supplied to the motor from bus bar 55 by means of sliding contact 58 which rides along bus bar 55 during rotation of the motor and which is connected to the motor by a suitable lead (not shown). Intermediate bus bar 56 which is mounted on frame 14 above the exhaust head assemblies 18, 18 is adapted to furnish current for the solenoid valves 52, 52 and the diffusion pumps 53, 53 through flexible leads 59, 59, 60, 60, 61, 61 and 62, 62 which are connected to sliding multiple contact plates 63, 63 which are mounted on frames 42, 42 and ride along bus bar 56. Bus bar 56 is insulated in the zones where contact is to be broken between bus bar 56 and one or more of the contacts on contact plates 63, 63, although trigger operated switches or other means for interrupting the current flow can be used.

Each diffusion pump 53 has a cooling coil 64 of copper tubing or other suitable material wound around the barrel of the pump. The inlet ends of coils 64, 64 are connected to a rotary cap 65 on a central water supply pipe 66 by means of supply lines 67, 67 mounted on shell 17. Each supply line 67 includes a slip fit automatic shut off valve unit 68 adjacent the exhaust head assembly whereby the water lines can be merely pulled apart when it is desired to remove the exhaust heads from the rotatable carriage. The outlet ends of coils 64, 64 extend to a point above an annular gutter 69 on shell 17. Gutter 69 drains through a sleeve 70 around supply line 67 to a drain line 72 concentric with the central water pipe 66, drain line 72 being arranged to discharge into a drained sump 73 positioned below base plate 10.

When the apparatus is employed merely for evacuating and sealing a hollow article, such as a Thermos bottle element as illustrated in Fig. 4, a simple holding fixture can be employed on each exhaust head. Thus, as in the embodiment shown in Fig. 4, a spring loaded seat 74 is mounted on each exhaust head frame 42, directly below the exhaust head socket 54, for receiving the closed end of the article to be evacuated. A simple bi-fingered holder 75 is slidably mounted on a suitable support 76 and is arranged to press downwardly on the top of the article adjacent the neck and thus pin the article against the spring seat 74, pressure being supplied by a weak tension spring 77 which connects the holder 75 to the base 78 of the holding fixture. In the embodiment shown in Fig. 4, spring seat 74 is mounted on a piston 80 which is journalled in frame 42 and arranged for vertical displacement. Wheel 81 mounted on the lower end of piston 80 rides on an annular rail 82 on base plate 10, the rail 82 having a lower elevation at the loading and unloading positions than around the remainder of

the circumference of the apparatus, whereby the article being treated is clear of the exhaust socket **54** at the loading and unloading positions and is raised up into engagement with the exhaust socket during the remainder of the processing cycle.

Any suitable exhaust socket can be employed on the exhaust heads, a preferred embodiment particularly adapted for use in the inverted position being shown in detail in Figs. 5 and 6. In this embodiment, the exhaust socket **54** comprises a base member **83** from which depends a metal core **84** and a bellows **85** encircling the core **84**. The lower end of core **84** is recessed and has a resilient sealing member **86** seated therein. Core **84** has a central bore **87** extending longitudinally through core **84** and aligned with a similar opening through sealing member **86**, sealing member **86** thus being adapted to receive the neck of an article to be evacuated as shown in Figs. 5 and 6. Apertured metal base plate **88** closes the unsecured end of bellows **85** and has an upwardly directed annular rib **90** adapted to compress sealing member **86** around the neck of an article in the socket when bellows **85** is contracted by evacuation as shown in Fig. 6. Other exhaust socket constructions can be used, however, such as the screw-cap type shown in Fig. 4, which can be either mechanically tightened and loosened or automatically indexed by suitable dogs (not shown) mounted on the frame of the apparatus and arranged to engage the projecting lugs **91, 91** on the exhaust socket during rotation of the carriage.

In apparatus particularly adapted for processing vacuum tubes, a sealing assembly is employed for fusing a tube envelope to a tube base prior to evacuation and tipping off of the tube. In such apparatus, as illustrated particularly in Figs. 1 and 2, a two-position holding fixture is employed and the tube components are sealed together in one revolution of the apparatus and then indexed to engage the exhaust socket and evacuated and tipped off in a second revolution of the apparatus. As illustrated particularly in Fig. 1, the sealing assembly consists of an annular tube **92** mounted on posts **13, 13** and encircling the carriage from the loading position to the unloading position. Tube **92** has a plurality of inwardly directed burner jets **93, 93** spaced around the inner circumference of tube **92**, with suitable connections (not shown) being provided for introducing gas and air into tube **92**.

In the embodiment shown in Figs. 1 and 2, a dual holding fixture assembly is employed on each exhaust head **18** and includes a turn table **94** mounted for rotation on frame **42** and carrying holding fixtures **95, 95**. Each holding fixture **95** has a socket **96**, adapted to receive the base of a vacuum tube. Socket **96** is mounted on the upper end of spindle **97** which is mounted for rotation in a vertically displaceable piston **98** which in turn is journalled in a cylinder **100** adjacent the periphery of the turn table **94**.

A stationary ring gear **101** is mounted on base plate **10** directly below the various turn tables **94, 94**. Ring gear **101** engages a gear wheel **102** on the lower end of a drive shaft **103** which is journalled in a bearing housing **104** mounted on the lower face of each turn table **94**. Each shaft **103** in turn carries a driving gear **105** which engages a spindle gear **106** on the lower end of spindle **97** when spindle **97** is in the lowered position, so that spindle **97** is rotated during the sealing operation by movement of the rotatable carriage along its path of rotation. When the spindle **97** is in the lowered position, the tube in socket **96** is at a height corresponding to tube **92** of the sealing assembly.

A spring loaded dog **107** is mounted on each piston **98** so as to lock spindle **97** against rotation except during the sealing operation. Dogs **107, 107** are sprung into locking position as triggers **108, 108** move over tripping member **110** mounted on base plate **10** adjacent the unloading position at the end of the sealing cycle, and are retracted by cocking wheels **111, 111** which are adapted to be turned by member **112** mounted on base plate **10** adjacent the loading position.

In the case of apparatus for processing vacuum tubes, each exhaust head assembly desirably includes an individual high frequency inductance coil **113** which is positioned directly below exhaust socket **54** and is suspended from a roller **114** which rides on an overhead track **115** mounted on frame **14**. The coil **113** rides along with the exhaust socket and is of sufficient size to encircle a vacuum tube being processed. Track **115** is constructed with an undulating contour so that the high frequency coil **113** is raised from around the body of the tube being processed during the tip off and unloading of the processed tube. The various coils **113, 113** on the several exhaust head assemblies are supplied with current from bus bar **57** by means of suitable flexible leads **116, 116** which connect the coils **113, 113** with sliding contacts **117, 117** mounted on supporting arms **118, 118**. Each supporting arm **118** is removably mounted on dished head **19** by means of pin **120** on the end of the arm **118** which fits into a hole **121** on dished head **19**.

An air cylinder **122** is mounted vertically on base plate **10** adjacent the loading position and directly below a spot over which the various exhaust sockets pass. The cylinder **122**, which is connected to a source of compressed air (not shown), is tripped by contact with the spindle gear **106** on the holding fixture **95** which is on the inner side of turn table **94** as the exhaust head assembly moves past the loading position. Upon being tripped, cylinder **122** pushes piston **98** upwardly out of engagement with driving gear **105** and brings the neck of the article being evacuated into the exhaust socket **54**.

Apparatus embodying this invention, whether employed only for evacuation and tipping off as in the case of Thermos bottles, or for processing vacuum tubes, includes a tip off assembly positioned adjacent the unloading position. In the particular embodiment illustrated in the drawings, the tip off assembly comprises opposed tubes **123** and **124** each carrying a plurality of burner jets **125, 125** between which the evacuated tubes pass. The tip off assembly is mounted at a height such that the burners **125, 125** are directed against the neck of the article below the exhaust socket and can be either stationary or mounted for reciprocating movement. The processed tubes can be removed manually by the operator or any well-known device can be employed for removing the processed tubes from the holding fixture.

A typical processing cycle employed in processing a vacuum tube is illustrated diagrammatically in Fig. 8. Employing the apparatus of Fig. 1 with the various exhaust head assemblies mounted on the rotatable carriage and having motor **25** rotating the rotatable carriage and motor **15** driving the various mechanical vacuum pumps **47, 47**, the operator inserts a tube base in each holding socket **96** and drops a tube envelope into position over the tube base on the outer of the two holding fixtures **95, 95** as the exhaust head assemblies pass the loading position. The processing cycle is best understood by following a single tube through the entire cycle. After the assembled tube components leave the loading station the cocking wheel **111** is engaged by member **112** and retracts dog **107** from the locking position with spindle **97**. The movement of the carriage causes driving gear **105** to rotate spindle **97** and hence rotate the assembled tube as it passes adjacent the burners **93, 93** on tube **92**. During the remainder of the first cycle around the apparatus, the tube continues to be rotated in the sealing flames and the tube base and envelope are fused together into an integrated tube. As the tube again approaches the loading position, trigger **108** is tripped by passage over member **110** and spindle **97** is locked by dog **107**. This causes the driving gear **105** to rotate the turn table **97** through 180° to a po-

sition in which the integrated tube is directly below exhaust socket 54. At this point, the other holding fixture on the turn table is directly in front of the operator and ready to be loaded. The tube being followed through the processing cycle is then pushed upwardly by means of cylinder 122 until the neck of the tube is in exhaust socket 54. At this point solenoid valve 52 is actuated to connect the mechanical pump 47 directly to exhaust socket 54. This causes the bellows 85 to contract and compress sealing member 86 in vacuum-tight relation around the neck of the tube.

The mechanical pump, which operates continuously throughout the operation of the apparatus, then rough pumps the tube through a portion of the second revolution of the apparatus. At a predetermined position, solenoid valve 52 is again actuated from bus bar 56 and connects diffusion pump 53 directly to exhaust socket 54 with mechanical pump 47 backing the diffusion pump. Solenoid valve 52 desirably carries a pressure responsive device, such as is well-known in the art, whereby the diffusion pump is not connected to the exhaust socket in the event that the tube is defective and a sufficiently low pressure has not been reached. Employing the exhaust socket shown particularly in Figs. 5 and 6, a defective tube also admits sufficient air so that the exhaust socket opens and piston 98 drops downwardly to a position where the tube being processed is clear of the exhaust socket. In such an event, the tube is not tipped off later in the cycle and defective tubes are readily removed.

In the event that the tube in the fixture is not defective, the high vacuum pumping continues through the remainder of the second cycle of the tube around the apparatus. At a predetermined position in the cycle, the high frequency coil 113 is lowered into position around the tube and energized. This causes the tube and its elements to be heated during the high vacuum pumping whereby improved evacuation is effected. If desired, the tube socket can also be connected to bus bar 56 at one of the contacts on plate 63 so as to energize the tube filaments and to flash a getter during the evacuating cycle.

As the evacuated tube approaches the unloading position, it passes through the tip off assembly and the neck of the article is fused and the weight of piston 98 pulls the evacuated article downwardly until it is completely tipped off. At this point, the solenoid valve isolates the pumping system from the exhaust socket. The exhaust socket opens and the tube stub drops out of the socket, leaving it free for reloading. The processed tube is then carried to the outside of the turn table by rotation of the turn table as described hereinafter at the completion of the sealing cycle. The processed tube is removed from the holding fixture either manually or mechanically and the holding fixture is then ready for reloading by the operator.

The apparatus embodying this invention employs a single drive mechanism for all of the mechanical vacuum pumps and is adapted for ready disengagement of any one or all of such pumps from the driving mechanism at any time. The driving mechanism for the vacuum pumps and for the entire rotatable carriage is constructed so as to minimize any likelihood of mechanical failure. The exhaust head assemblies carry all of the elements which might require repair or servicing during operation of the apparatus. Each exhaust head assembly is removable as a unit from the apparatus by merely unscrewing wing nut 44 and lifting the exhaust head including the entire pumping system, exhaust socket and holding fixture off of the ball support on the dished head. If desired, a replacement exhaust head assembly can be immediately substituted on the apparatus or the apparatus can be operated entirely satisfactorily with one or more of the exhaust head assemblies removed. Thus the repairing or servicing of an exhaust head assembly does not necessitate a prolonged shut down of the apparatus and results in a considerable saving in production time.

The apparatus operates continuously and automatically, and the operator need only load the holding fixtures with fresh articles to be evacuated as the exhaust head assemblies pass the loading position. The processing of any single article is entirely independent of the remaining articles being processed simultaneously, and failure due to a defective tube or a mechanical break down of one of the elements of the exhaust head assembly does not in any way affect the processing of the remaining articles. High speed production can thus be maintained in accordance with this invention over prolonged periods of time. The construction of the apparatus ensures proper processing of each tube and thus minimizes the percentage of rejects due to reasons other than tubes of defective construction.

The apparatus illustrated in the drawings is a 16-head apparatus but the number of heads can be varied depending upon production requirements and it is not intended that the invention should be limited to the particular embodiments shown for purposes of illustration. Similarly, many other hollow articles can be processed on apparatus embodying the invention with such changes or substitutions of equivalents as would be obvious to one skilled in the art.

It will therefore be understood that, although the invention has been described with particular reference to certain preferred embodiments thereof as illustrated in the drawings, variations and modifications can be effected within the spirit and scope of the invention as described hereinafter and illustrated in the drawings and as defined in the appended claims.

I claim:

1. Apparatus for processing hollow articles comprising stationary supporting means, a generally circular member mounted for rotation on said supporting means, means for continuously rotating said circular member, a plurality of hanger elements on the periphery of said circular member, exhaust head units coupled to hang from said hanger elements and readily removable therefrom, each exhaust head unit being independent of the remaining exhaust head units and comprising a frame adapted to removably engage one of said hanger elements, a mechanical pump secured to said frame and having a drive shaft projecting inwardly towards said circular member and terminating in a clutch plate facing said circular member, a diffusion pump, an inverted exhaust socket for engaging the neck of an article to be evacuated, valve and conduit means connecting said exhaust socket with said pumps and arranged for rough pumping during a portion of the rotation of said circular member and for high vacuum pumping during a subsequent portion of the rotation of said circular member, a holding fixture mounted on said frame for releasably holding an article during processing, said holding fixture being mounted for displacement from a position remote from said exhaust socket to an evacuating position adjacent said exhaust socket, and means operable in a predetermined zone along the path of rotation of said circular member for displacing said holding fixture between said positions as said exhaust head unit moves through said predetermined zone, each said exhaust head unit being removable from said circular member as a unit, means for energizing said diffusion pump during rotation of said circular member, central driving means mounted on said circular member for simultaneously driving the mechanical pump on each of said exhaust head units, said central driving means including drive shaft means for contact engagement with said clutch plate on each of said mechanical pumps, and means mounted on said supporting means in an end zone of said high vacuum pumping portion of the rotation of said circular member for tipping off evacuated articles being moved through said end zone.

2. Apparatus for processing vacuum tubes and the like, said apparatus comprising a stationary base member, a generally circular rotatable member mounted for rotation upon said base member, a plurality of independent ex-

haust head units removably mounted on the periphery of said rotatable member, each said exhaust head unit including an individual vacuum pumping system comprising a mechanical vacuum pump and a diffusion vacuum pump, an exhaust socket connected with said vacuum pumping system and adapted to receive the neck of an article to be processed, means for holding the article to be evacuated, and a cooling coil for said diffusion pump, each said exhaust head being independent of the remaining exhaust heads and removable as a unit from said rotatable member, bus bar means for supplying electric current to said diffusion pumps during rotation of said rotatable member, centrally disposed means for simultaneously driving all of said mechanical pumps during rotation of said rotatable member and including disengageable coupling means for connecting each of said mechanical pumps with said centrally disposed means, a water supply line disposed centrally of said apparatus, a rotary member on said water supply line, individual take-off conduits connecting said rotary member with the inlet end of each of said cooling coils, automatically valved disengageable couplings in each of said take-off conduits, and annular gutter means arranged to receive discharge water from said coils during rotation of said rotatable member.

3. Apparatus for processing vacuum tubes and the like, said apparatus comprising supporting means, rotatable means mounted on said supporting means, means for rotating said rotatable means, a plurality of exhaust head units supported by said rotatable means and independently removable from said rotatable means, each said exhaust head unit comprising a complete vacuum pumping system, an exhaust socket connected with said pumping system, and displaceable means for holding an article being processed, each said exhaust head unit being mounted for removal as a unit from said rotatable member, means for actuating said pumping system during rotation of said rotatable member, sealing means for fusing together envelope and base components of an article being processed, said sealing means being disposed along the path of travel of said exhaust head units but remote from said exhaust sockets, means for bringing said holding means into sealing relation with said sealing means during a predetermined first portion of the processing cycle, means for bringing said holding means into evacuating relation with said exhaust socket during a subsequent portion of the processing cycle, and tipping off means mounted in a localized zone along the path of travel of said exhaust units and adjacent to said exhaust sockets, said tipping off means being arranged for tipping off the neck of an article held in evacuating relation in said exhaust socket.

4. Apparatus for processing vacuum tubes and the like, said apparatus comprising supporting means, a rotatable shell mounted on said supporting means, means for rotating said rotatable shell, a plurality of exhaust head units mounted on said rotatable shell around the periphery of said rotatable shell and independently removable therefrom, each said exhaust head unit comprising an individual vacuum pumping system including a mechanical vacuum pump and a diffusion pump, an exhaust socket connected to said vacuum pumping system and adapted to receive the neck of an article being processed and a rotatable and vertically displaceable holding fixture adapted to hold an article during processing, disengageable means for energizing said diffusion pumps during rotation of said shell, a centrally disposed motor and gear assembly for simultaneously driving said mechanical vacuum pumps during rotation of said shell, disengageable coupling means for connecting each of said mechanical pumps with said motor and gear assembly when the exhaust unit including said mechanical pump is mounted on said shell, centrally disposed water supply means, disengageable means for supplying cooling water to each of said exhaust head units from said water supply means during rotation of said shell, means for sealing together an envelope and base of an article being processed during movement of said article past said sealing means, said sealing means being mounted on said supporting means adjacent the path of travel of said exhaust head units but remote from said exhaust sockets, means for maintaining said holding fixtures in sealing relation with said sealing means during an early portion of the processing cycle, means for rotating said holding fixtures during movement past said sealing means, means for bringing said holding fixtures into evacuating relation with said exhaust sockets after movement past said sealing means, tipping-off means mounted on said supporting means adjacent to the path of travel of said exhaust sockets and positioned for tipping off the neck of an article being processed during a final portion of the evacuating cycle, and means for returning said holding fixtures to sealing position following movement of said fixtures past said tipping-off means.

5. Apparatus for processing hollow articles comprising stationary supporting means, a rotatable member mounted for rotation on said supporting means, a plurality of independent exhaust head units removably mounted on said rotatable member around the periphery of said rotatable member, each said exhaust head unit including a mechanical vacuum pump and a diffusion pump arranged as an individual pumping system, an exhaust socket connected to said pumping system and adapted to receive the neck of an article to be evacuated, and a holding fixture for bringing an article to be evacuated into evacuating relation with said exhaust socket, means for rotating said rotatable member, a central driving mechanism for driving all of said mechanical pumps simultaneously and during rotation of said rotatable member, said central driving mechanism comprising a motor and gear assembly mounted on said rotatable member for rotation therewith, drive shafts projecting outwardly from said central driving mechanism to a point adjacent each said exhaust head unit, and a disengageable coupling on each said drive shaft arranged to operably engage one of said mechanical vacuum pumps throughout operation of said apparatus, annular bus bar means mounted on said supporting means and carrying electrical current for operating said motor and said diffusion pumps during rotation of said rotatable member, current conducting means making contact with said bus bar means for supplying current to said motor and said diffustion pumps during rotation of said rotatable member, and means for tipping off an article being processed in a terminal zone along the path of rotation of said rotatable member.

6. Apparatus for processing hollow articles comprising a stationary supporting member, a circular track on said supporting member, a generally circular rotatable member mounted on said supporting member and riding on said track, a plurality of individual exhaust head units, means for detachably supporting said exhaust head units on said rotatable member in side-by-side relation around the periphery of said rotatable member, means for continuously rotating said rotatable member on said track and thereby moving said exhaust head units simultaneously and sequentially around a circular path from a loading position to an unloading position, each said exhaust head including an integral assembly comprising an individual vacuum pumping system including rough pumping means and high vacuum pumping means, an exhaust socket connected to said vacuum pumping system, and means for holding an article being processed, said means for holding being displaceable from a first position remote from said exhaust socket to a second position wherein the article being processed is engaged by said exhaust socket, means for actuating said individual vacuum pumping systems simultaneously during rotation of said rotatable member, means positioned adjacent said circular path for sealing together component ele-

ments of articles being processed as said articles are moved sequentially past said sealing means by movement of said exhaust head units along said circular path from said loading position with said holding means maintained in said first position remote from said exhaust socket, means operable in a zone adjacent the end of said sealing means for sequentially displacing said holding means to said second position during movement along said circular path, means for causing said exhaust sockets in sequence to engage said articles in vacuum tight relation upon movement of said holding means to said second position, means operable in a predetermined zone along the path of travel of said holding fixtures in said second position for connecting each exhaust socket in turn to the rough pumping means of its vacuum pumping system, means operable in a subsequent predetermined zone for connecting each exhaust socket in turn to the high vacuum pumping means of its vacuum pumping system, and means positioned adjacent the path of travel of said holding fixtures in said second position for tipping off the necks of articles being processed adjacent the end of said subsequent zone wherein said articles are pumped by said high vacuum pumping means.

7. Apparatus for processing vacuum tubes comprising a stationary supporting frame including a generally circular baseplate, a generally circular rotatable shell mounted for rotation on said baseplate, a plurality of independent exhaust head units adapted to be hung in side-by-side relation along the periphery of said rotatable shell for rotation therewith, each said exhaust head unit comprising a frame adapted to hang on said shell and removable therefrom, an exhaust socket mounted on said frame and adapted to engage the neck of a vacuum tube, an individual vacuum pumping system mounted on said frame and comprising a mechanical vacuum pump having a drive shaft projecting inwardly toward said rotatable shell and terminating in a clutch plate, a diffusion pump, valve and conduit means for connecting said vacuum pumping system with said exhaust socket in rough pumping relation during a portion of the processing cycle and in high vacuum pumping relation during a subsequent portion of the processing cycle, holding fixture means adapted to bring a vacuum tube into and out of evacuating relation with said exhaust socket, cooling coil means for said diffusion pump, and a high frequency inductance coil for heating a tube while the tube is being evacuated, each said exhaust head unit being independent of the remaining exhaust head units and being removable as a unit from said rotatable shell, means for continuously rotating said shell on said baseplate, motor and gear means mounted on said shell for rotation therewith and being effective to drive said mechanical vacuum pumps simultaneously and during rotation of said shell, drive shaft means geared to said gear means and projecting outwardly into engagement with said clutch plate on each said mechanical vacuum pump, current carrying means mounted on said supporting frame and arranged for supplying current to said motor and to said exhaust head units during rotation of said shell, fluid supply means arranged for continuously furnishing cooling fluid to said cooling coil means on each exhaust head unit during rotation of said shell, means for moving each said holding fixture means in turn into and out of evacuating relation with said exhaust socket at predetermined positions along the path of travel of said rotatable shell, a sealing assembly comprising a plurality of spaced burner jets positioned adjacent the path of travel of said exhaust head units during rotation of said shell and arranged for sealing together tube components moving by said sealing means with said holding fixture means out of evacuating relation with said exhaust socket, and tipping off means arranged adjacent the path of travel of said exhaust head units and arranged for tipping off tubes engaged by said exhaust sockets during rotation of said shell and following high vacuum pumping of said tubes.

References Cited in the file of this patent

UNITED STATES PATENTS

1,445,811	Wetmore	Feb. 20, 1923
1,461,155	Madden et al.	July 10, 1923
1,708,756	Fagan et al.	Apr. 9, 1929
1,736,767	Burrows	Nov. 19, 1929
2,006,771	Kayko et al.	July 2, 1935
2,098,030	Donovan et al.	Nov. 2, 1937
2,162,209	Trutner	June 13, 1939
2,201,694	Illingworth	May 21, 1940
2,533,919	Christiansen et al.	Dec. 12, 1950
2,565,298	De Groat	Aug. 21, 1951