Aug. 14, 1945. F. R. SEAVEY 2,382,921

EXPLOSIVE

Filed April 15, 1940 2 Sheets-Sheet 1

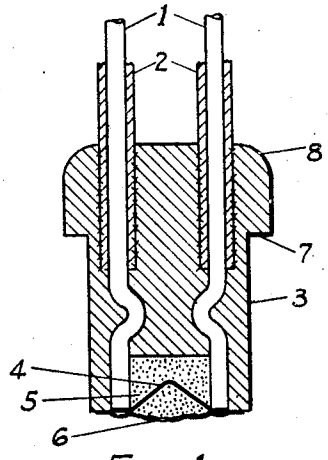

Fig. 1

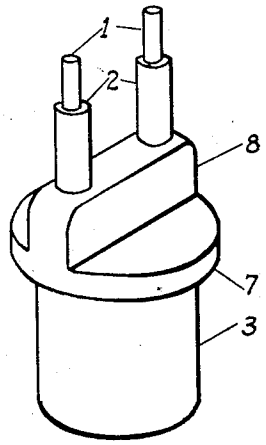

Fig. 2

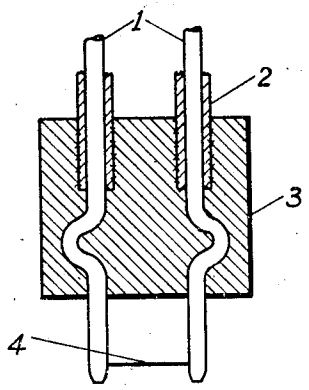

Fig. 3

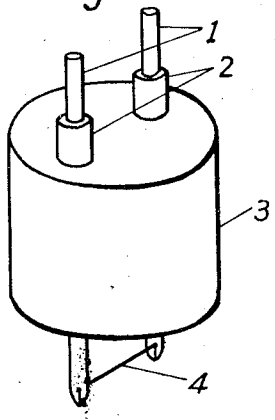

Fig. 4

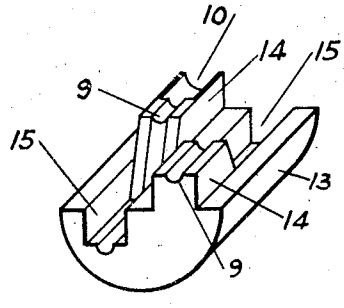

Fig. 9

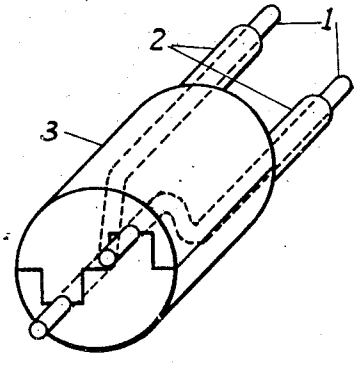

Fig. 10

INVENTOR
FREDERICK R. SEAVEY
BY Joseph Fleischer
ATTORNEY

Aug. 14, 1945. F. R. SEAVEY 2,382,921

EXPLOSIVE

Filed April 15, 1940 2 Sheets-Sheet 2

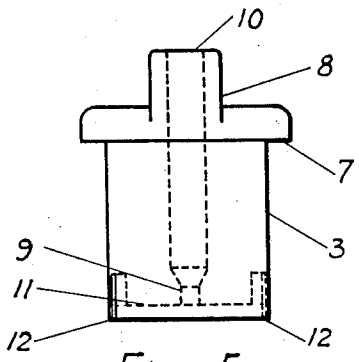

Fig. 5

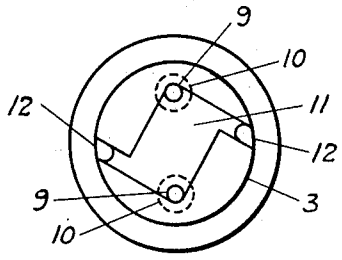

Fig. 6

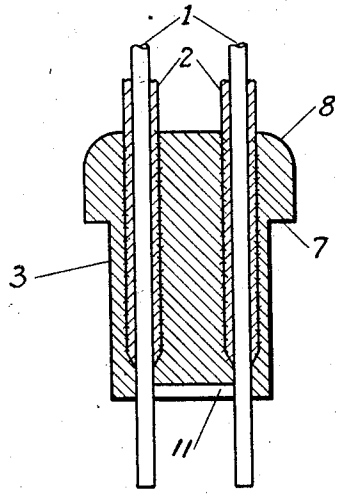

Fig. 7

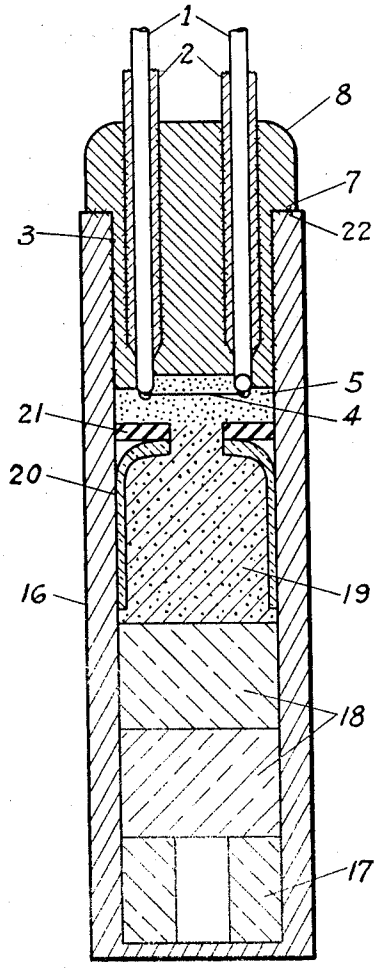

Fig. 11

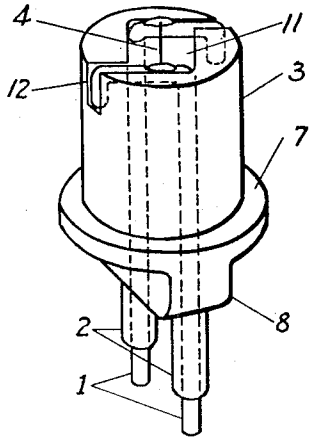

Fig. 8

INVENTOR
FREDERICK R. SEAVEY
BY Joseph Fleischer
ATTORNEY

Patented Aug. 14, 1945 2,382,921

UNITED STATES PATENT OFFICE

2,382,921

EXPLOSIVE

Frederick R. Seavey, Alton, Ill., assignor to Olin Industries, Inc., a corporation of Delaware

Application April 15, 1940, Serial No. 329,650

1 Claim. (Cl. 102—28)

This invention pertains to improved electric explosion initiators, such as are adapted for use in initiating the action of blasting or other explosive charges, and more particularly to electric detonators having novel ignition-closure plugs.

Heretofore, electric detonators have usually consisted of elongated metal cups containing consecutively a base charge of explosive, a superposed charge of initiating or priming explosive, and an ignition composition surrounding a resistance wire, usually termed the bridge wire. The bridge wire has been attached to a pair of insulated electrical lead wires, the assembly being arranged so that on connecting terminals of the latter to a source of electrical current, the bridge wire is heated, causing the ignition of the surrounding composition, which subsequently sets off the detonator base charge.

It has been general practice in the manufacture of electric detonators to mount the electrical lead wires in a sulfur plug, then to attach the bridge wire across the terminals of the lead wires, and insert the assembly into the explosive-loaded shell. A relatively deep layer of a pitch composition intended for waterproofing the contents of the cap has then been applied, followed by a shorter layer of sulfur, both layers being formed in place by pouring in the heated fluid material and then solidifying by cooling.

With this type of ignition and closure means, the seal has not been as thorough as desired under the adverse conditions which are at times encountered, and failure of the seal may then result in malfunctions or misfires of the detonator. In blasing operations, failure of the blast initiating cap to function properly may lead to disastrous consequences in view of the fact that the large mass of explosive charge which remains unexploded may subsequently be set off without warning.

The occasional lack of a perfect seal in the above-described assembly can be attributed to passages which may form within the pitch or between the pitch and the shell or the lead wires. Furthermore, even through a good seal might be obtained at the time of manufacture, passages to the interior of the detonator could subsequently result when the assembly was subjected to varying conditions of pressure and temperature, since it has been the prior practice to have materials of markedly different physical properties, such as compressibility and thermal expansion, adjacent to one another in the completed assembly.

In addition, the pitch composition, due to the requirement of fluidity imposed by the method of assembly, has had the tendency, under elevated temperature which are at times encountered during storage and use of the electric detonators, to flow through the sulfur closure layer or past the sulfur plug into contact with the explosive charge. This has resulted in failure or reduced efficiency of the detonators after exposure to such temperatures, because of the desensitization of the explosive charge by the pitch or the lack of sufficient confinement of the explosive charge by the impaired closure.

Furthermore, the use of a separate ignition plug and of the superposed layers of pitch and of sulfur have made it necessary to provide detonator shells of inordinate length and of far greater capacity than required by the explosive content.

Many prior attempts have been made to provide closure means overcoming such difficulties, but these have not proved successful in practice due to the undesirable manufacturing operations required and, in general, to deficiencies in the suggested construction or materials.

An object of this invention is the provision of improved electric explosion initiators having novel closure means.

Another object is to provide electric initiators capable of withstanding adverse conditions during storage and use without impairment of functioning.

A further object of the invention is to furnish a closure for electric initiators which is compact, waterproof, and provides a tight seal capable of successfully withstanding pressure and temperature changes.

Another object is to provide a closure plug for electric initiators which permits the obtainment of an effective seal by a simplified assembly operation.

Another object is the provision of a closure plug for electric initiators which is integrally united with the electrical lead wire insulation.

Another object of the invention is to provide electric initiators displaying improved security of mounting of the electrical lead wires.

In the drawings,

Fig. 1 is a longitudinal section and Fig. 2 a perspective view of a closure-ignition plug prepared in accordance with this invention;

Fig. 3 is a longitudinal section and Fig. 4 a perspective view of another form of plug embodying this invention;

Fig. 5 is a side view and Fig. 6 a bottom view of still another form of plug;

Fig. 7 is a longitudinal section of the above plug after assembly with the insulated lead wires;

Fig. 8 is a perspective view of the same after attachment of the bridge wire;

Figs. 9 and 10 are perspective views of a further embodiment in accordance with this invention;

And Fig. 11 is a longitudinal section of an assembled detonator embodying the plug of Fig. 8.

In accordance with this invention, generally stated, electric explosion initiators are provided having a relatively rigid organic plastic closure plug and electrical lead wires which are each insulated by means of a flexible organic plastic sheath, a portion of the lead wire insulation being embedded within the plug and integrally bonded thereto as hereinafter described.

The bond is produced by assembling the insulated wire within the plug while the surface of the insulation is in a temporarily softened condition so that after hardening or setting, the contacting parts become united. The resulting bond may be of such intimate nature that in the completed assembly no dividing line is apparent between the plug and wire insulation. However, where a bonding interlayer is discernible after the assembly has been completed, it may advantageously be one which penetrates the adjacent surfaces.

In order to accomplish this type of bonding within the closure plug, the electrical lead wire in accordance with this invention is insulated by a continuous layer of suitable plastic, having good electrical insulation and waterproofing characteristics, flexibility over the range of temperatures which may be encountered during use and the property of being rendered adhesive by heat and/or treatment with a solvent. Wire-insulating coatings most desirable for the purpose may be prepared from thermoplastic compositions, comprising for example, a cellulose ether, a vinyl polymer, or a cellulose fatty acid ester. Likewise, rubber derivatives, such as chlorinated rubber, and other high molecular weight resins, characterized as synthetic rubber-like materials, may be utilized in sheathing the wire. Continuous wire insulation of this type is characterized by better waterproofing and insulating properties than the impregnated fibrous insulation heretofore in general use, as well as by stability and relative non-flammability. A suitably plasticized ethyl cellulose composition extruded on the wire has been found particularly advantageous as the insulating sheath surrounding the lead wires.

The closure plug may be composed of any of a wide variety of organic plastic compositions which are adapted for the fabrication by a molding or casting technic of an article having the desired strength, resistance to mechanical distortion, and insulating quality, as well as sufficient stability to retain such properties unimpaired during storage, and which are desirably nonflammable. It is moreover essential for accomplishing the objects of this invention that the material constituting the plug be capable of bonding with the electrical lead wire insulation either by a process of molding or casting the plug about the insulated lead wires, or by a procedure in which the contacting surface of the insulating sheath is suitably softened prior to assembly. An organic plastic meeting these requirements may be of the thermo-setting variety, for example comprising urea-formaldehyde or one of the phenolic-aldehyde group, represented by phenol-formaldehyde, or may be a thermoplastic composition, such as one comprising a cellulose ether, cellulose fatty acid ester, or vinyl polymer, specifically exemplified by ethyl cellulose, cellulose acetate, cellulose acetate-butyrate, methyl methacrylate, polyvinyl chloride-actate, polyvinyl acetal, polystyrene, and polyvinylidene chloride. In any case, the plastic constituting the plug is chosen with reference to the thermoplastic composition being used for the wire insulation, so that a firm union is obtainable on assembly.

Closure plugs in which the electrical lead wire insulation is embedded in accordance with this invention may be prepared by various manufacturing methods. In one method, the plastic composing the plug may be forced by pressure from a reservoir containing a quantity of the preheated molding powder into a mold containing the insulated lead wires, the molding process being carried out to form an integral bond between the plug and the insulation.

In another advantageous procedure, the plug may be preformed, having openings provided for the insertion of the insulated lead wires by any suitable molding method, for example by a compression or injection molding technic. Then, for assembly, the contacting surface of the insulation is moistened with a suitable solvent or solvent composition, inserted within the plug, and the bond effected by dispersing the solvent.

Likewise, the plug may be formed by casting a liquid resin in a mold around the inserted insulated lead wires and solidifying the resin to the desired extent as by the action of a polymerizing agent such as heat, light, and/or a suitable catalyst.

It is essential for securing an adequately strong and rigid joint that the above-described procedures be carried out so that the lead wire insulation penetrates substantially into the plug and becomes integrally united thereto over an extended area within the plug.

After the lead wires have been bonded within the plug, the detonator bridge wire may be attached to their terminals according to one of the known swaging, welding, or soldering methods. The closure plug is then ready for insertion in a loaded detonator where the latter is of the type containing a charge of loose ignition composition. Or, if desired, an ignition charge may first be cemented in place surrounding the bridge wire, and the assembly then inserted in the detonator.

In cases where the plug is preformed, having openings for the insertion of the insulated lead wires, and the insulation is sealed within the preformed plug by the use of a softening fluid, the latter may consist of a solvent composition, either a pure liquid or mixture of liquids, for the two parts. Furthermore, the solvent may contain plastic material dispersed therein, such as that used in the plug or insulation, and also nonvolatile plasticizer, if desired. Generally, a lacquer consisting of the plug or insulation plastic dispersed in a suitable solvent will constitute an excellent medium for uniting the plug and the wire insulation.

This invention accordingly provides closure-ignition plugs for electric explosion initiators within which the flexible sheath insulating the electrical lead wires is so intimately sealed that the embedded portion becomes an integral part of the plug. Due to the penetration of the wire insulation within the plug and their union over an

extended area, the bond formed between the plug and the insulation may be sufficiently firm as to prevent their separation even on the application of a pull sufficient to break the wire. Furthermore, the plug constitutes a rigid self-sustaining body resistant to mechanical distortion, by means of which the electrical lead wires and the bridge wire are secured fixed in their desired positions. Electric explosion initiators may be sealed thereby by a simple procedure which does not involve any mechanical deformation of the initiator shell at any time during the assembly. This invention therefore provides a significantly increased degree of safety in the manufacture, handling, and use of electric explosion initiators.

Referring to the drawings, in which typical embodiments of this invention are shown by way of illustration, Figs. 1 and 2 represent a type of closure-ignition plug carrying the ignition charge cemented in place surrounding the bridge wire. In preparing this plug, metal lead wires 1, provided with an insulating sheath 2 consisting of ethyl cellulose containing a nonvolatile solvent plasticizer such as di-ortho-xenyl mono-phenyl phosphate and resin, lubricant, dye, or pigment as desired, are stripped of the insulation for a short distance, kinked at a point within the plug if desired, and inserted in a suitable mold. Plug 3 is then molded about the insulated lead wires, using a composition and molding conditions such that the wire insulation is bonded within the plug. The plug composition may, for example, consist of polystyrene, with small proportions of plasticizer, filler material, and dye or pigment as desired. The strength of the bond in the resulting assembly is enhanced by the effective interlocking of the contacting surfaces of the plug and insulation, indicated by cross-hatching in the drawings.

It will be observed that the plug 3 is molded having a recess in its base for accommodation of the bridge wire 4 and ignition composition 5. The bridge wire 4 is attached by means of a welding or soldering procedure to the exposed terminals of the lead wires 1, which may be trimmed if desired to be substantially flush with the base of plug 3. The bridge wire 4, is disposed entirely within the cavity in the plug. The cavity may then be filled with a loose charge of ignition composition 5, which is then fixed in place by means of a suitable lacquer film 6. The sensitive ignition composition, being confined within the cavity in the base of the plug, is mechanically protected against premature explosion during manufacture, handling, and use in the field.

Shoulder 7, is provided to contact the mouth of the complementary detonator shell for the purpose of suitably sealing the plug and properly positioning the same in the completed assembly. Bar 8, projecting above the short cylindrical shoulder portion of the plug, is provided as a convenient means for accurately controlling the position of the plug during the manufacturing steps, particularly during the attachment of the bridge wire.

The closure-ignition plug shown in Figs. 3 and 4 consists of a substantially cylindrical body, which may be formed by a procedure similar to that described in the preceding example, the lead wire 1 being desirably kinked within the plug 3 to provide firmer anchorage. The electrical lead wire insulation 2 may consist of a vinyl copolymer, preferably consisting of 95 percent chloride and 5 percent acetate and having a molecular weight of about 20,000, containing a small percentage of a suitable plasticizer. The plug may be prepared using a suitable vinyl copolymer molding composition, for example, one based on a copolymer containing 85–87 percent chloride and 13–13 percent acetate and polymerized to a molecular weight of about 10,000, which is capable of forming an integral closure with the wire insulation 2 under the molding conditions used. After the sprue has been removed from the molded plug, the stripped lead wires projecting from the base are cut to the desired length, the terminals are then notched and the proper length of bridge wire 4 attached by a swaging procedure, for example as described in U. S. Patent 1,605,688. The plug is then ready for assembly in a detonator of the type having a loose charge of ignition composition.

The closure-ignition plug shown in Figs. 5 to 8 inclusive, is of the preformed type into which the insulated lead wires are inserted and sealed. The plug may be formed by the injection molding of a composition formulated with ethyl cellulose, having 47 to 49 percent ethoxy content, which contains 65 to 85 percent of ethyl cellulose with a plasticizer or mixture of plasticizers such as dibutyl phthalate, triphenyl or substituted triphenyl phosphate, chlorinated diphenyl, or similar materials, a lubricant such as a stearate and/or paraffin oil, a wax to further reduce water absorption, and coloring materials. Openings 9 and 10 are provided in the molded plug 3 to accommodate snugly a short length of the stripped metal lead wire 1 and a relatively greater length of wire covered with ethyl cellulose insulation 2, respectively. The base of the plug 3 is provided at its periphery with grooves 12, which may be extended if desired into the cylindrical outer wall for locking the lead wires against rotation.

In making the assembly, lead wires are stripped of their insulation over a desired predetermined length. These ends are now dipped into a softening fluid, care being taken that the proper length of the insulation is immersed. A useful fluid consists, for example, of 10 parts by weight of a low viscosity ethyl cellulose and 40 parts by weight of "Aroclor Resin #4465" dispersed in 75 parts by weight of a mixture of 4 parts by volume of toluene and 1 part by volume of methanol. Excess fluid is shaken off and the lead wires are inserted into openings 10 until the ends of the insulation are in contact with the constricted portion formed with openings 9, at which point the proper lengths of bare wire will project beyond the base of the plug. After drying, the assembly will consist of an integral closure as illustrated in sectional view in Fig. 7, adjacent surfaces of the plug and insulation being effectively interlocked.

The projecting lead wires are then bent sharply so as to have their terminal portions retained in grooves 12. Bridge wire 4 is attached by stretching a length of the wire at a predetermined angle across the parallel bent lead wires 1, and then soldering or welding. After removal of the excess bridge wire, the assembly will be as illustrated in Fig. 8. The described method of bending the lead wires in parallel position in a plane parallel to the base of the plug and then attaching the bridge wire across them is ad-

vantageous for simplicity of operation and the provision of a sturdy assembly.

The plug is now ready for insertion in a detonator having a loose charge of ignition composition, or, if desired, an ignition charge may first be cemented around the bridge wire and in cavity 11 by means of a suitable lacquer film, or by the use of a self-bonding paste of ignition composition.

An alternative form of plug is shown in Figs. 9 and 10. In this embodiment, the plug is preformed in two portions adapted for assembly with the insulated lead wires to form a closure unit. Preferably, the portions are identical so as to be interchangeable and are provided with grooves for embracing the lead wires, and complementary projections and indentations so as to furnish a self-aligning rigid assembly. One such plug section 13 is shown in Fig. 9, grooves 9 and 10 being adapted for tightly embracing bare lead wire and insulated lead wire respectively, while projections 14 are adapted for engagement in indentations 15 of the complementary section. For assembly, a suitable length of lead wire, stripped of insulation at the end for the desired distance, is inserted in the groove 10 of each of a pair of plug parts 13. The surfaces of the wire insulation and of the parts 13 intended to be in the interior of the completed plug are softened by treatment with a suitable softening fluid and pressed together in proper relation, resulting, after a suitable drying treatment, in a firm assembly of the plug sections and wire insulating sheath, for example as shown in Fig. 10.

An assembled detonator embodying a typical closure-ignition plug in accordance with this invention is illustrated in Fig. 11. Detonator shell 16 is molded of a suitable organic plastic, such as an ethyl cellulose composition, displaying high impact strength, which is substantially retained at low temperatures, and desirable dimensional stability. The shell is about an inch long, about 0.3 inch in diameter, and has walls about 0.045 inch thick and an 0.025 inch base. It contains a suitable explosive base charge, as of 6.5 grains of tetryl precompressed to a density of about 1.60 in the form of a bottom ring pellet 17 and two superposed solid pellets 18. The initiating charge 19 may be any desired composition meeting the requirements and may, for example, consist of 2.5 grains of a diazodinitrophenol-potassium chlorate mixture, containing 85 percent by weight of the former, suitably compressed within a confining ferrule 20 against the base charge 18. A perforated insulating washer 21 is placed against the upper side of the ferrule, and the space above the washer is filled with the desired amount of a suitable ignition composition 5, for example with about 0.70 grain of a mixture composed of 85 parts by weight of mercury fulminate and 15 parts by weight of litharge. The plug of Fig. 8, with its associated bridge and leg wires, which had been preassembled as above described, is then inserted within the shell until shoulder 7 of the plug and flat rim 22 of the shell are in contact, adjacent cylindrical and flat surfaces having first been moistened with a suitable solvent, for example a solution of 4 parts by volume of benzol and 1 part by volume of methanol. Thus, the plug becomes integrally united with the shell by means of a bond similar to that formed between the wire-insulating sheath and the plug.

Similarly, electric detonators having the shell, closure plug, and wire insulation firmly bonded together to form a sealed integral assembly may be prepared with the use of vinyl chloride-acetate copolymer for the shell, plug, and wire-insulation. Likewise, a desirable product results when the molded shell and plug are prepared from a polyvinyl chloride-acetate composition and the wire insulation consists of plasticized polyvinyl chloride.

The resulting detonator is a unitary assembly in which the explosive charges are encased in a hermetically sealed casing, in which, because of the similarity in the thermal expansion and compressibility of the shell, plug, and lead wire insulation, the seal is maintained even after being subjected to changes in temperature and pressure.

It is to be understood that the closure-ignition plug of the present invention may be advantageously applied to electrical explosion initiators of the regular and delay types, including igniters as well as detonators at large. For example, its use in conjunction with metal detonator shells results in a safer cap than those heretofore available. For such use, the portion of the shell surface contacting the plug may desirably be coated with a suitable adhesive.

This invention thus accomplishes its objects in providing electric explosion initiating caps furnished with significantly improved features of utility over any which have heretofore been known.

Since various modifications within the spirit of this invention may be made in the specific embodiments which have been described, the detail description is to be considered as illustrative of and not limiting the invention, except in accordance with the appended claim.

I claim:

An electric explosion initiator comprising a shell, an organic plastic plug closing the shell, a pair of grooves in the base of the said plug, a pair of insulated electrical lead wires mounted in the plug, said wires having end portions extended in substantially parallel relation along the base of the said plug and locked against rotation within the said grooves, and a resistance wire attached across the said extended portions.

FREDERICK R. SEAVEY.