June 7, 1938. G. P. CRYSLER 2,119,779

ARCH CONSTRUCTION

Filed Feb. 10, 1936 2 Sheets-Sheet 1

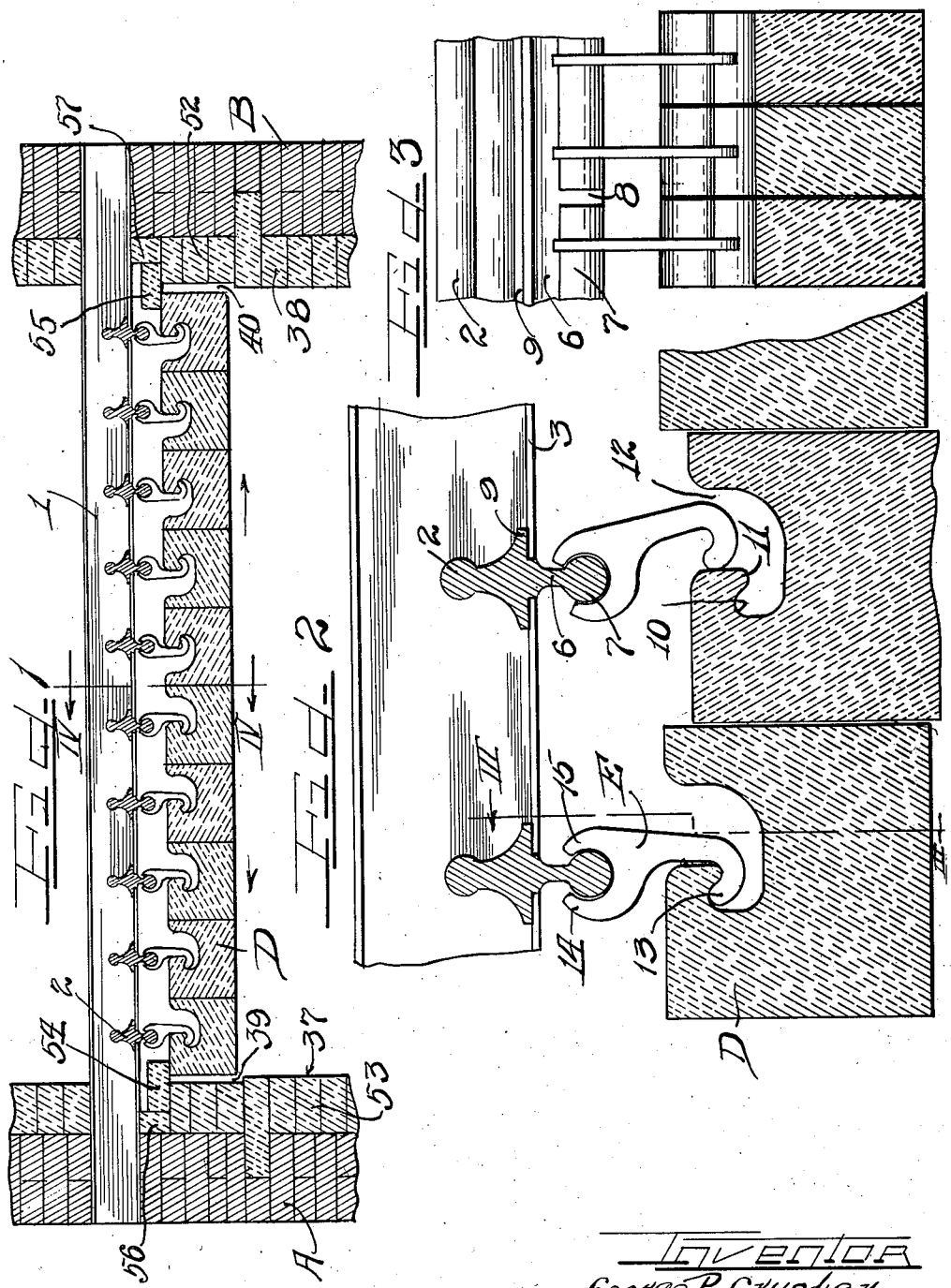

Inventor
George P. Crysler.
by Charles O'Neill Attys.

June 7, 1938. G. P. CRYSLER 2,119,779

ARCH CONSTRUCTION

Filed Feb. 10, 1936 2 Sheets-Sheet 2

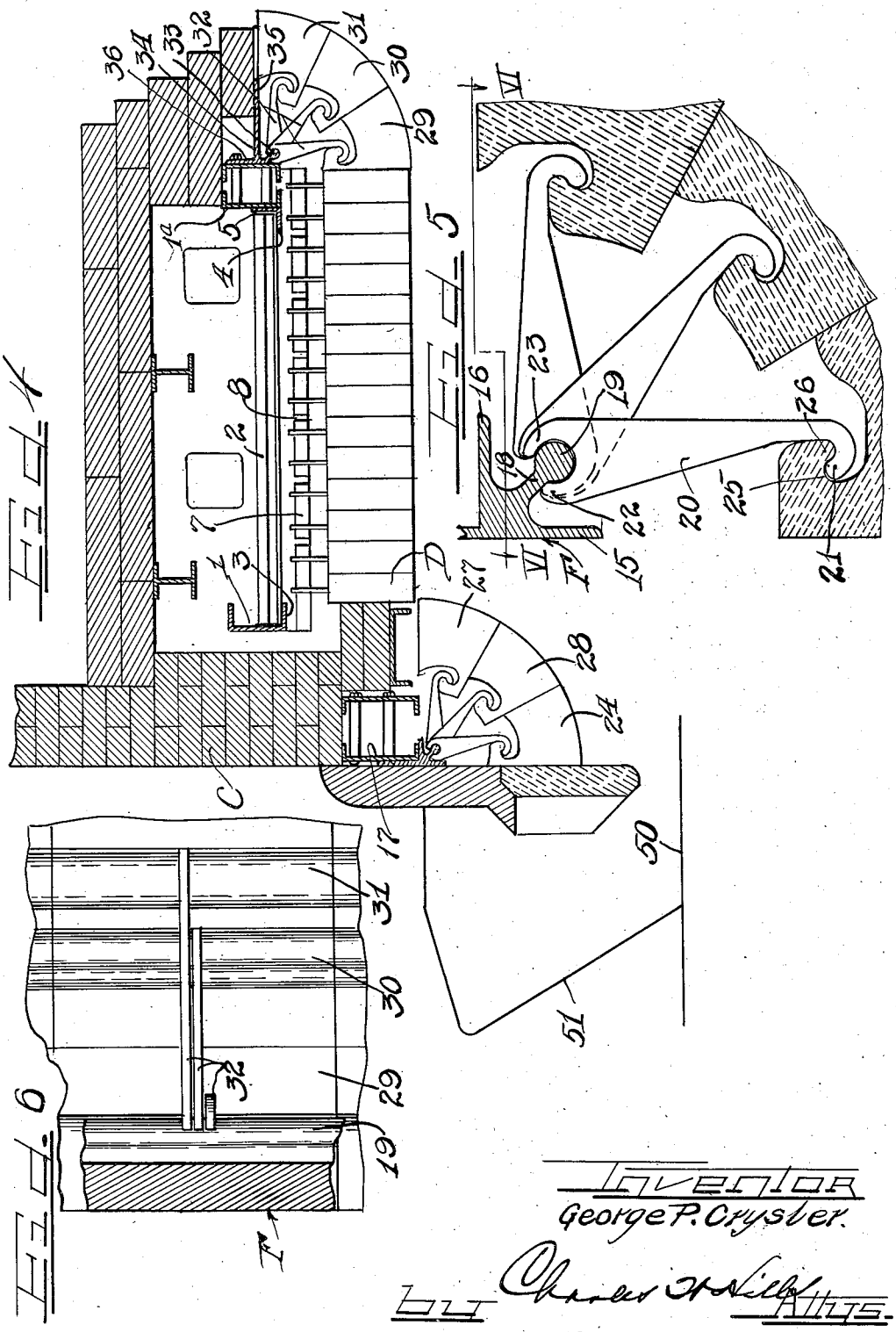

Inventor
George P. Crysler.
by Charles W. Hills Attys.

Patented June 7, 1938

2,119,779

UNITED STATES PATENT OFFICE

2,119,779

ARCH CONSTRUCTION

George P. Crysler, Chicago, Ill.

Application February 10, 1936, Serial No. 63,147

6 Claims. (Cl. 110—99)

The present invention relates to an arch construction, and more particularly to a refractory suspended arch.

In connection with the use of suspended arches for furnaces and the like, an important item is that of maintenance and repair. For repairing suspended arches, it is essential, in the economical operation of a furnace in which such an arch is used, to shut down the furnace for as short a time as possible.

There are in use at the present time suspended arches which must, because of their construction, be repaired from above the roof of the combustion chambers, necessitating shutting down the operation of the boiler or other mechanism with which the particular combustion chamber is utilized.

The present invention relates to an arch construction wherein maintenance and repair are facilitated so that a furnace, embodying the arch construction of the present invention, may be out of service for a comparatively short time.

An object of the present invention is to provide an arch construction wherein the arch blocks or tiles are individually supported.

Another object of the present invention is to provide a refractory suspended arch of such construction that any tile or block may be replaced without disturbing or removing adjacent tiles or blocks.

A further object of the present invention is to provide a refractory suspended arch of such construction that any tile or block may be replaced from within the combustion chamber by movement of a new block towards its support and within the space formerly occupied by the removed block.

A still further object of the present invention is to provide individual suspension means for arch blocks or tiles whereby a block may be secured to its suspension means by movement of the block along the length of its suspension means, and wherein the block and the suspension means are automatically hooked together against separation.

Still a further object of the present invention is to provide means for pendulously supporting arch blocks wherein individual hangers carry individual blocks with hook action, and wherein a block and hanger are connected together by movement of the block longitudinally along its hanger.

Another and still further object of the present invention is to provide a refractory suspended arch construction wherein the arch blocks are pendulously supported by individual hangers in such fashion that any block may be replaced by a new block, by stripping away the old block and replacing it by a new block moved into the space formerly occupied by the removed block, from within the combustion chamber, by a movement substantially normal to the arch surface.

Generally speaking, the arch construction of the present invention contemplates individual hangers for individual blocks, which hangers are mounted for oscillation and which carry at their free ends hook means engageable with hook means formed on the blocks, any block being pushed into place from within the area of the combustion chamber and towards the support for its hanger, the block oscillating the hanger in one direction when being applied, and the hanger oscillating in the opposite direction, by gravital action, after the block has passed a certain position relatively to the end of the hanger, whereupon the block is given retrograde movement and hooked to its hanger.

The oscillatory mounting of the individual hangers to the blocks permits movement of the blocks in service, incidental to expansion. Such movement is possible in more than one direction.

An embodiment of the present invention is illustrated in the accompanying drawings and the views thereof are as follows:

Figure 1 is a fragmental view in vertical section taken between the side walls of a furnace equipped with an arch construction of the present invention, and showing certain parts in elevation.

Figure 2 is a view of a fragmental transverse section between the walls of a furnace, with certain parts in section and certain parts in elevation, showing at the left hand portion thereof hooking engagement between a block or tile and its hanger, and at the right hand portion thereof the manner of applying a block to its hanger by movement of the block upwardly from within the combustion chamber, showing the action of the hanger during such block application.

Figure 3 is a fragmental elevational view and also a vertical sectional view, taken in the plane indicated by the line III—III of Figure 2, showing the hangers in hooking relation with their blocks.

Figure 4 is a vertical longitudinal sectional view through a portion of a furnace equipped with the arch construction of the present invention, and taken substantially in the plane indicated by the line IV—IV of Figure 1.

Figure 5 is an enlarged view, taken as a vertical section through the fan end of a furnace equipped with blocks of the present invention and

showing the fan end blocks supported in hooked relationship with the novel hangers of the present invention.

Figure 6 is an enlarged horizontal sectional view taken substantially in the plane indicated by the line VI—VI of Figure 5.

The drawings will now be explained.

The invention has herein been illustrated as a flat suspended arch, although the invention is not to be limited to a flat arch, as it lends itself readily to arches of other configurations.

Referring to Figure 1, A and B designate opposite side walls of a combustion chamber of a furnace. Extending between these walls, at intervals in the length of the chamber, are structural members herein illustrated as channels. Near the front wall C of the furnace is a channel 1, and adjacent the rear of the combustion chamber is a channel 1*a*. These channels might be replaced by I-beams or other structural shapes, as desired.

Extending lengthwise of the combustion chamber are hanger bars 2 which are notched or otherwise shaped at their ends to fit the flanges 3 of the channel 1 and the flange 4 of an angle bar 5 secured to the backside of the channel 1*a*; that is to say, the ends of the hanger bars 2 are applied to their supporting flanges by being inclined horizontally so that the ends thereof will engage over the supporting flanges.

The hanger bars 2, as herein illustrated, include a web 6 which lies underneath the flanges 3 and 4, and along the lower margin of the web are formed cylindrical portions 7 which are endwise spaced from one another forming gaps 8.

The blocks or tiles D are illustrated as being substantially 3 inches in width, which is the dimension shown in Figure 3, 9 inches high and 10 inches deep, the depth being the dimension illustrated in Figure 2.

Thus, with the blocks D of 3 inches' width, the longitudinally spaced cylindrical portions 7 of the hanger bars 2 are designed to support two of the blocks. These portions 7 of course, could be longer to support more than two blocks.

The hanger bars 2 are, intermediate their heights, provided with lateral flanges 9 which rest against the upper surfaces of the flanges 3 and 4 for supporting the arch from the channels 1 and 2.

The blocks D are all fashioned to provide undercut recesses 10 and noses 11 along such undercuts. The length of the undercuts and the noses extend depthwise of the blocks. Adjacent the undercuts 10 and noses 11, the blocks are cut away to form spaces 12 for a purpose to be later explained. The blocks D are individually suspended from the hanger bars 2 by means of hangers E. The lower ends of the hangers are provided with J-shaped hooks 13 for engaging underneath the noses 11 of the blocks and entering the undercut portions 10 of the recesses, and at their upper ends with jaws 14 and 15 which, in side elevation as viewed in Figure 2, are arcuate, to surround portions of the cylindrical surfaces of the portions 7 of the hanger bars 2. The extremities of the jaws are spaced sufficiently far apart to permit oscillation of the hangers on the bars.

The several blocks D are formed to provide openings having entrances through the tops of the blocks with the sides defining such openings inwardly spaced from both of two opposite side walls of the blocks. The blocks are formed with upwardly extending recesses behind the lowest points of the noses, to afford space for the extremities of the hooks when the blocks are engaged with the hooks.

The design and arrangement of the hangers E is such that due to the forces of gravity, when freely suspended, the hooks 13 of the hangers will extend slightly beyond a center line drawn vertically through the hanger bars 2. This is for the purpose of assuring automatic hooking engagement with a block when it is moved lengthwise of its hanger for connection to the hanger.

In applying the hangers E to the portions 7 of the hanger bars 2, a hanger is inserted through a gap 8 and then slid lengthwise along the proper portion 7 and a second hanger is applied to such portion in the manner described. In this fashion, as illustrated, there are two hangers per portion 7 applied to the hanger bars.

When the hanger bars have been properly installed on the flanges 3 and 4, and the hangers E applied to the portions 7 of the hanger bars, the blocks D are then hooked onto their hangers. The blocks may be hooked in any convenient manner until there are but a few spaces left in the arch to be filled by blocks. These spaces are closed by the application of the blocks, from within the combustion chamber, by movement along their hangers from below, that is, from within the combustion chamber.

Figure 2 illustrates the manner of applying a block to its hanger by a movement upwardly from within the combustion chamber. A block is moved upwardly, whereupon the nose 11 of the block swings the hanger E to the right as viewed in Figure 2 until the end of the hook 13 of the hanger passes underneath the nose 11, whereupon, by gravital action, the hanger falls into the position shown at the left of Figure 2, and the block is then given retrograde movement thus hooking itself to the hanger E, as shown at the left of Figure 2. The block is thus mounted in proper position.

If at any time it is necessary to replace one block or several blocks, the defective blocks are broken away by suitable tools by an operator entering the combustion chamber, and after he has broken away the damaged blocks, replaces these blocks with new blocks being moved upwardly into hooking engagement with their hangers as heretofore described.

Because of the fact that the hangers E may oscillate on the portions 7 of the hanger bars 2, movement of the blocks lengthwise in a row, as viewed in Figure 1, under expansion, would oscillate the hangers slightly without disconnection between the blocks and hangers. Should expansion occur lengthwise of the furnace, then the hangers E might slide along the portions 7 of the hanger bars or take slight tilts with respect to these bars. In any event, the connection of a block to its hanger is such that movement of a block, due to expansion, may occur without in any way imposing strain on its hanger and thus causing damage to the hanger or block.

The present invention lends itself to the construction of fan ends for combustion chambers, two fan ends being illustrated in Figure 4. To construct the lower fan end of Figure 4, a special casting F is made. This casting F has a flange 15 by which it may be suitably attached to the steelwork of the furnace. The casting F also has a horizontal flange 16 which is connected to a channel 17 or other structural shape supporting the casting. As an integral part of the cast-

ing F is a web 18 which is provided with a cylindrical end portion 19. Hangers 20 having hooked ends 21 and spaced legs 22 and 23 are applied endwise along the cylindrical portion 19 from its end.

Segmental blocks 24 are fashioned with undercut portions 25 and noses 26 for cooperating with the hooks 21 of the hangers 20 in the same manner that the blocks D cooperate with their hangers. The blocks 24 of the fan end are applied lengthwise of the hangers until the hangers engage with hooking action the undercuts 25 and noses 26 of the blocks.

In applying the uppermost fan block 27, this would be applied before the intermediate fan block 28 is inserted, as it will be observed that because of the relationship of the hanger for the block 27 with respect to the adjacent channel 17, insufficient space is afforded for proper swinging of the hanger to permit installation of the block 27 by a horizontal movement from right to left, as viewed in Figure 4.

The blocks 24, 28 and 27 of the fan end just described are arranged in rows, there being three of the hangers 20 per row. The fan end at the rear of the combustion chamber consists of radial blocks 29, 30 and 31 per row, which are held in position by hangers 32 supported on the cylindrical portion 33 of a special casting 34. The special casting 34 has a horizontal leg 35 for carrying brickwork, and a vertical portion 36 for attachment to an adjacent structural member of the framework.

The hangers 20 for the fan end blocks are shown in plan in Figure 6 with the three hangers arranged closely together for every row of such blocks. The hangers 32 at the other fan end are arranged in closely grouped relation in the same manner as illustrated in Figure 6.

In constructing the side walls A and B of the combustion chamber, it is necessary that space be provided for expansion of the arch. The refractory surfaces 37 and 38 of the side walls are recessed at 39 and 40, in substantial register with the side margins of the arch. These recesses are formed by using refractory bricks 52 which are narrower than the bricks 53 constituting the refractory surfaces 37 and 38. The widthwise dimension of an arch—which is that shown in Figure 1—is slightly less than the width of the combustion chamber, of which the arch forms a part. Hence, widthwise expansion of the arch may occur without damage.

By constructing the recesses 39 and 40 as described, the outermost tiles or blocks D of the arch may be applied to their hangers by vertical upward movement from within the combustion chamber.

To prevent heat losses through the recesses 39 and 40, rows of split refractory bricks 54 and 55 are laid across the recesses by being supported atop the endmost blocks of the transverse rows of arch blocks and the upper of the narrow bricks 52. The row 54 overlies the recess 39, and the row 55 overlies the recess 40. The bricks of the rows 54 and 55 are loose to permit application of the outermost blocks D of the arch by upward vertical movement. Narrow filler bricks 56 and 57 are inserted behind the split bricks 54 and 55 to position them in proper position over the recesses 39 and 40.

It will be observed from the foregoing description that any of the blocks D of the arch may be replaced by a similar block, by movement of such block upwardly from within the combustion chamber and along the length of its hanger, the hanger and block automatically engaging in hooking action when the block has been raised a sufficient distance so that the nose 11 thereof passes over the hook 13 of its hanger. In like manner, the individual blocks of the fan ends may be replaced when necessary.

The construction of the present invention eliminates the usual heavy ironwork present above the combustion chamber and instead employs the channels 1 and 1a or equivalent structural elements for carrying the suspended load of the arch. The individual suspension of the several blocks or tiles makes possible ready replacement of any of such blocks without disturbing adjacent blocks.

Figure 1 illustrates one manner of arranging the hangers with respect to a row of arched blocks. It is observed that in this figure certain of the hangers are arranged with their hooks extending towards the wall B and other hangers with their hooks extending towards the wall A. Thus, for instance, if the blocks at the right hand portion of the line IV—IV of Figure 1 moved to the right, the hangers would swing to the right and the noses 11 of the blocks would rock on the hooks of the hangers. In like manner, were the blocks to the left of this line to move to the left, corresponding action would take place.

If desired, the hangers to the right of the line IV—IV of Figure 1 and blocks might be reversed so that the hooks of these hangers extend towards the wall A instead of towards the wall B. Were this done, then the blocks and hangers of the left hand portion of the row would be likewise changed. The manner of installing the hangers and blocks to take care of lengthwise expansive action of any row of blocks is a matter of preference at the time of installation. The hangers and blocks will work equally as well with either arrangement.

In Figure 4, the line 50 represents the stoker chain, while the fuel hopper is diagrammatically represented at 51.

The spaces 12 formed in the blocks provide room for swinging of the hangers, within the blocks, whenever a block is applied to its hanger in the manner herein described.

The invention has been described herein more or less precisely as to details, yet it is to be understood that the invention is not to be limited thereby, as changes may be made in the arrangement and proportions of parts, and equivalents may be substituted, without departing from the spirit and scope of the invention.

The invention is claimed as follows:

1. A suspension refractory arch construction wherein every block is individually supported by a single hanger; including a beam having its lower surface provided with a plurality of longitudinally extending, longitudinally spaced substantially cylindrical portions serving as supports for suspension hangers; a series of suspension hangers having at similar ends open jaws of substantially circular form for engaging about said cylindrical portions for limited oscillation thereon and having at their other ends J-shaped hooks; and a series of refractory blocks, every block having a recessed upper end including an entrance opening of less extent than the distance between two opposite walls of said block and with a downwardly extending nose within the recess for receiving the hook end of a hanger, with one block to a hanger; the said

entrance openings being of such size as when a block is applied to its hanger the hook end of the hanger may be swung within the opening to permit movement of the block in the direction of the length of the hanger to move the block nose past the hanger hook without displacing, disturbing, or moving any adjacent blocks and without the hook end of said hanger projecting laterally outwardly of said opening, the block nose engaging the hanger hook after the nose has passed the hanger hook and the hanger has swung in reverse direction.

2. A suspension refractory arch construction wherein every arch block is individually supported by a single hanger; including a beam having its lower surface provided with a plurality of longitudinally extending, longitudinally spaced substantially cylindrical portions serving as supports for suspension hangers; a series of suspension hangers having at similar ends open jaws of substantially circular form for engaging about said cylindrical portions for limited oscillation thereon and having at their other ends J-shaped hooks, said hangers adapted to oscillate on the cylindrical portions in the direction of the plane of the side surfaces of the jaws; and a series of refractory blocks, every block having an opening through the upper end of the block between two opposite walls of the block with a downwardly extending nose within the recess for receiving the hook end of a hanger, with one block to a hanger; the said openings being of such size as when a block is applied to a hanger the hook end of the hanger may be swung within the opening to permit movement of the block in the direction of the length of the hanger to move the block nose past the hanger hook without displacing, disturbing, or removing any adjacent blocks, the block nose engaging the hanger hook after the nose has passed the hanger hook and the hanger has been swung in reverse direction.

3. A suspension refractory arch construction wherein every block is individually supported by a single hanger; including a beam having its lower surface provided with a plurality of longitudinally extending, longitudinally spaced substantially cylindrical portions serving as supports for suspension hangers; a series of suspension hangers having at similar ends open jaws of substantially circular form for engaging about said cylindrical portions for limited oscillation thereon and having at their other ends J-shaped hooks; a series of refractory blocks, every block having a recess with an entrance opening through the upper end of the block with the walls of the opening spaced inwardly from two opposite walls of the block and a downwardly extending nose within the recess for receiving the hook end of its hanger, with one block to a hanger; the construction being such that when a block is moved against its hanger in the direction of the length of the hanger, said hanger is swung on its support by the nose of said block and between the walls of said opening so that said block may be moved into hooking engagement with said hanger without disturbing other blocks bounding the space into which block is being moved.

4. In a furnace arch construction wherein refractory blocks are individually supported by single hangers to a block, hanger beams having longitudinally spaced and longitudinally extending cylindrical portions serving as supports for hangers, hangers having open circular jaws to receive and pass about said cylindrical portions and to depend from said cylindrical portions and to be oscillatable on the same, the other ends of said hangers being formed with hooks whose side surfaces lie in planes including the side surfaces of said jaws, refractory blocks having recesses enterable through their upper ends and formed to provide hook engaging noses within the recesses, the entrances to said recesses being defined by walls which are spaced inwardly from two opposite walls of the blocks and which spacing is sufficient to admit hanger hooks when said hangers are swung out of normal pendant position by contact of said block noses with the hooks of the hangers, which noses are in contact with the hanger hooks below the upper ends of the hangers when the blocks are in suspended position, said blocks being individually applied to said hangers by movement of the blocks lengthwise of the hangers and the block noses contacting the hooks to swing the hangers about the hanger supports to allow the block noses to pass the hanger hooks, the hooks thereafter swinging back underneath the block noses to underlie the noses to suspend said blocks, the construction being such that any block may be replaced without disturbing the contiguous blocks.

5. Block and hanger construction for suspended arch roof, in combination, a pendant hanger supported for oscillatable movement and having a J-shaped hook at its lower end, a roof block having an opening with an entrance through the top of the block with the surfaces defining the entrance inwardly spaced from both of two opposite surfaces of the block, said block and hanger adapted to be connected in hooked relation by relative vertical movement, said block being formed with a downwardly extending nose within the opening and with the block recessed upwardly behind the lowest point of the nose to afford space for the extremity of a hook, the said entrance being formed to provide sufficient clearance for entry of the hook of the hanger with the planes of the sides of the hook at right angles to the direction of length of the nose, the application of a block to a hook by upward vertical movement of the block causing swing of the hanger on its support by contact of the block nose with a hook to thereby allow movement of the nose past the hook, the hook thereupon swinging underneath the nose with the extremity of the hook in said recess and the nose in the bight of the hook.

6. Block and hanger construction for suspended arch roof, in combination, a pendant hanger supported for oscillatable movement and having a J-shaped hook at its lower end, a roof block having an opening with an entrance through the top of the block, said block and hanger adapted to be connected in hooked relation by relative vertical movement, said block being formed with a downwardly extending nose within the opening and with the block recessed upwardly behind the point of the nose to afford space for the extremity of the hook, the nose being formed with its length extending cross-wise of the opening and spaced inwardly from the planes of two opposite side surfaces of the block, the entrance to said opening through said top of said block being of greater extent in the direction between said two opposite side surfaces of the block than the width of the hook end of the hanger to provide sufficient clearance for entry of the hook with the planes of the sides of the hook at right-angles to the direction of the length of the nose, the application of a block to a hook being effected by

upward vertical movement of the block causing swinging of the hanger on its support by contact of the block nose with the hook to thereby allow movement of the nose past the hook, the hook thereupon swinging underneath the nose with the extremity of the hook in said recess and the nose in the bight of the hook, the construction being such that the action of the hook in moving into engagement with said nose occurring within the limits of said top entrance between said two opposite side surfaces of the block.

GEORGE P. CRYSLER.