US 20140331400A1

(19) United States

(12) Patent Application Publication

CHIEN et al.

(10) Pub. No.: US 2014/0331400 A1

(43) Pub. Date: Nov. 13, 2014

(54) **BATH AID STRUCTURE AND BATH AID ASSEMBLY**

(71) Applicants: **LI-SHENG CHIEN**, TAIPEI CITY (TW); **CHIEN-CHANG HO**, TAIPEI CITY (TW)

(72) Inventors: **LI-SHENG CHIEN**, TAIPEI CITY (TW); **CHIEN-CHANG HO**, TAIPEI CITY (TW)

(21) Appl. No.: **13/890,513**

(22) Filed: **May 9, 2013**

Publication Classification

(51) **Int. Cl.**
A47K 3/12 (2006.01)

(52) **U.S. Cl.**
CPC *A47K 3/122* (2013.01)
USPC **4/578.1**

(57) **ABSTRACT**

A bath aid structure for use with a bathtub includes a first plate, a handle disposed on top of the first plate, and a second plate. The first plate is mounted on top of two sidewalls of the bathtub and includes a bend portion disposed on the first plate and having an opening corresponding in position to a cavity of the bathtub; a first pivotal connection portion disposed inside the bend portion and positioned distal to opening; and a first engagement portion positioned proximate to the opening. The second plate is received in the bend portion and includes a second pivotal connection portion corresponding in position to the first pivotal connection portion, such that the second plate is pivotally coupled to the first plate; and a second engagement portion corresponding in position to the first engagement portion, such that the second plate is movably fixed to the first plate.

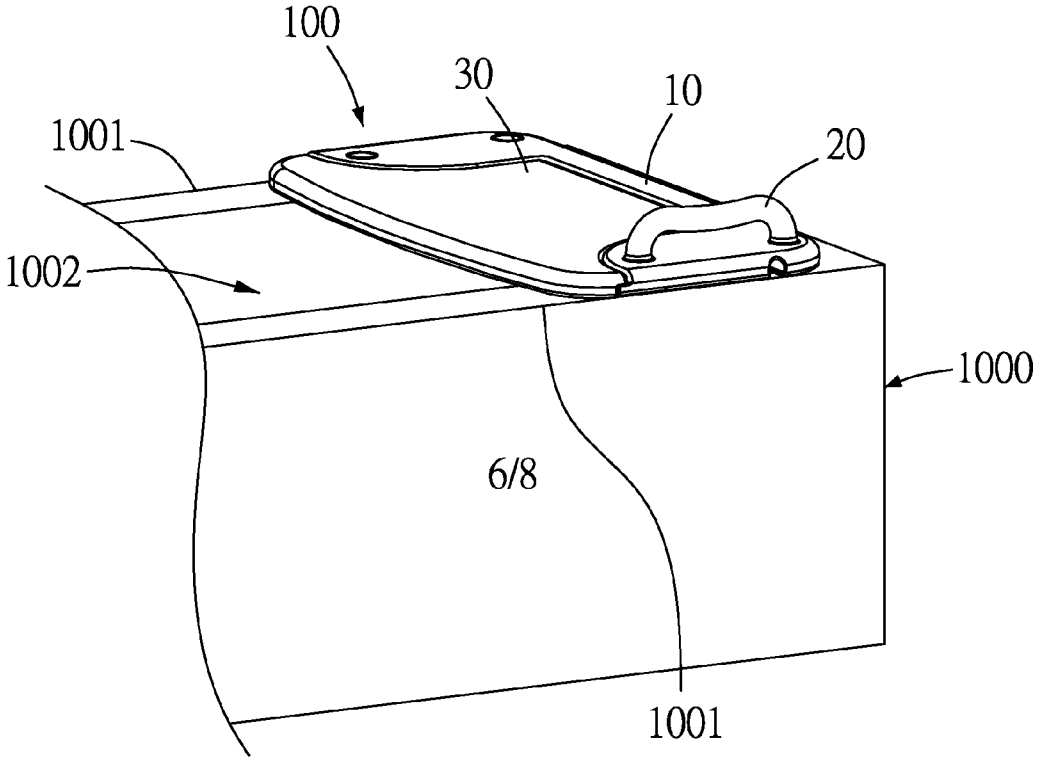

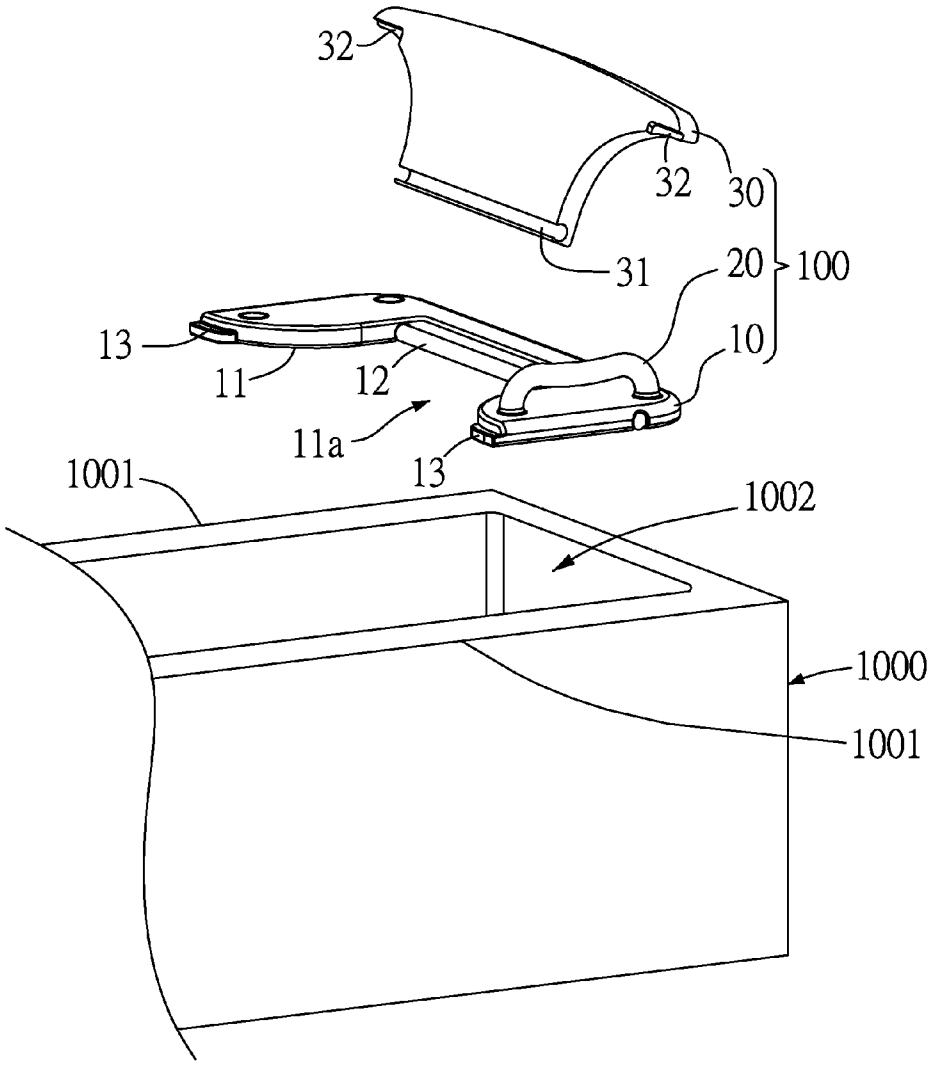

FIG.1

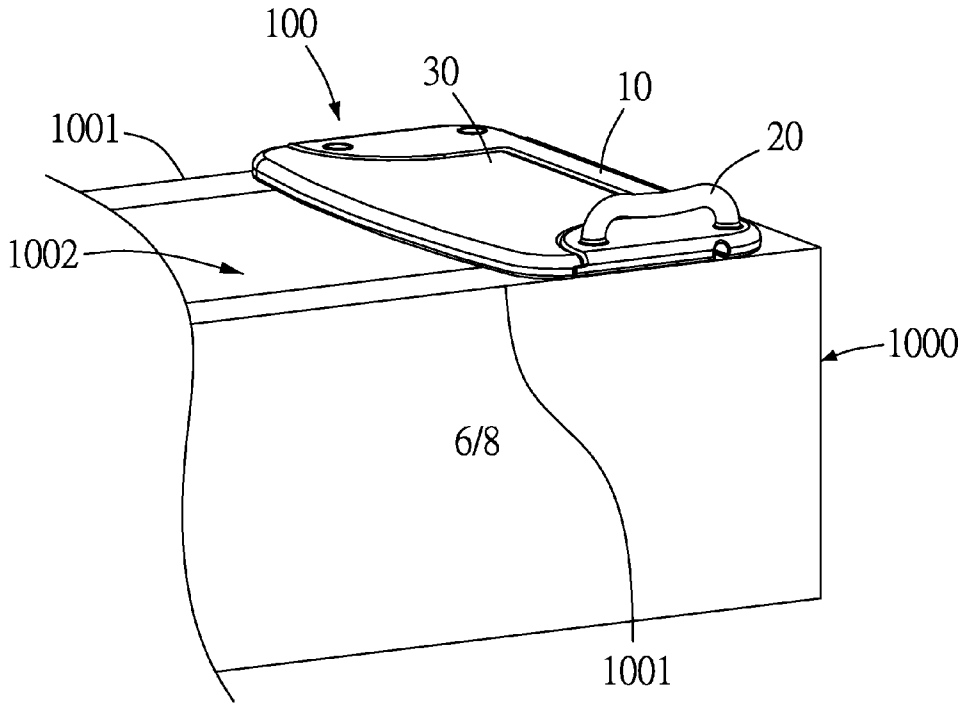

FIG.2

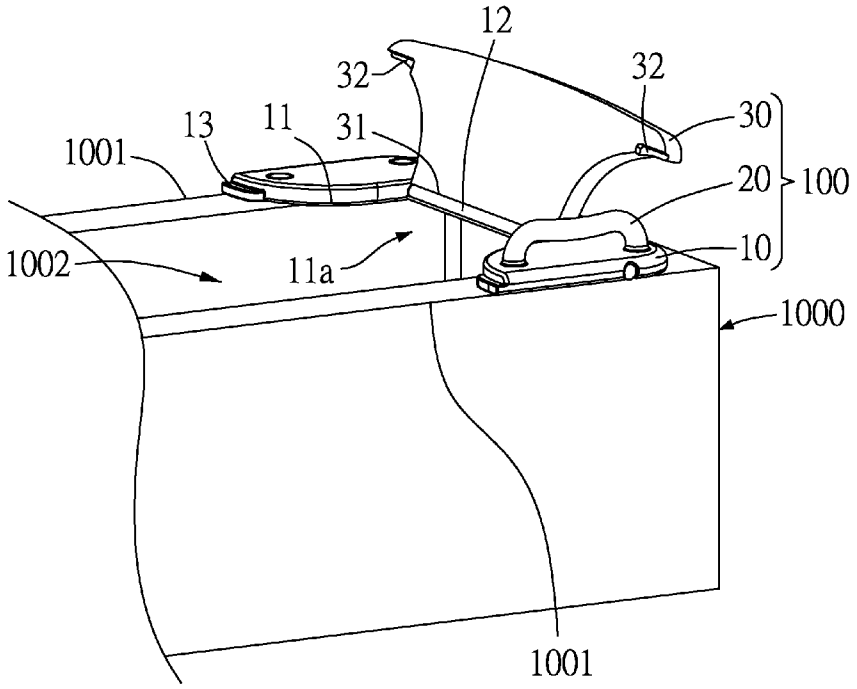

FIG.3

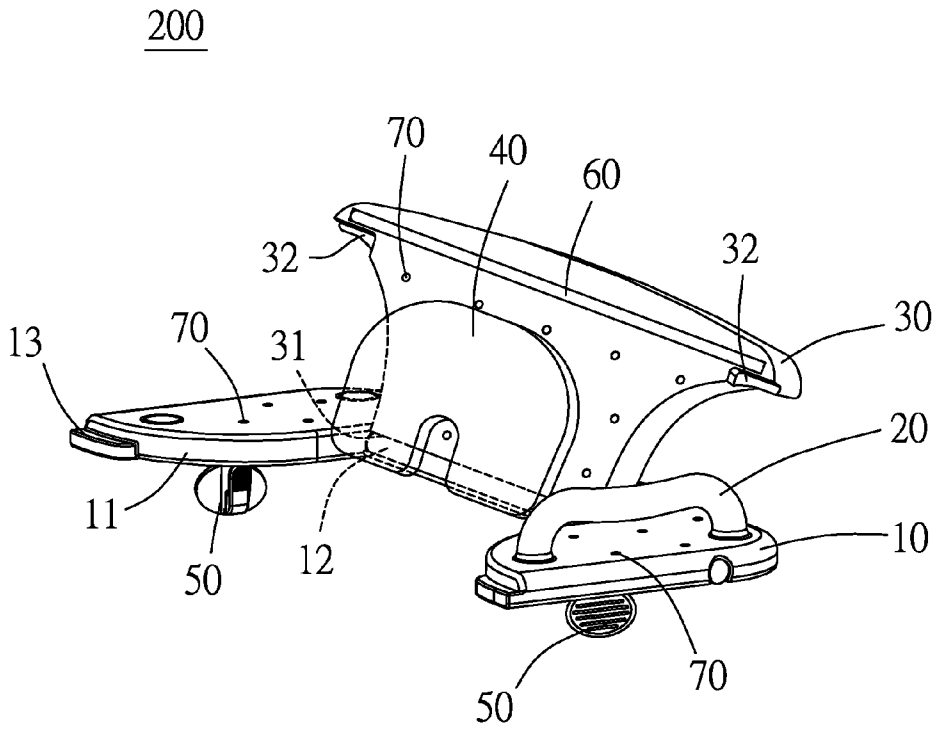

FIG.4

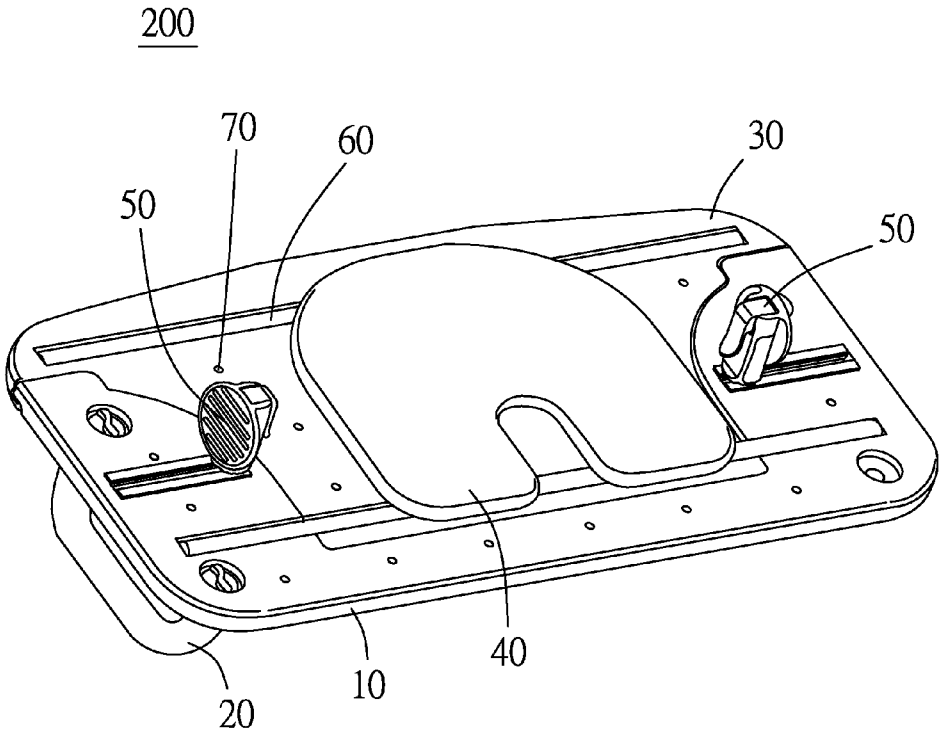

FIG.5

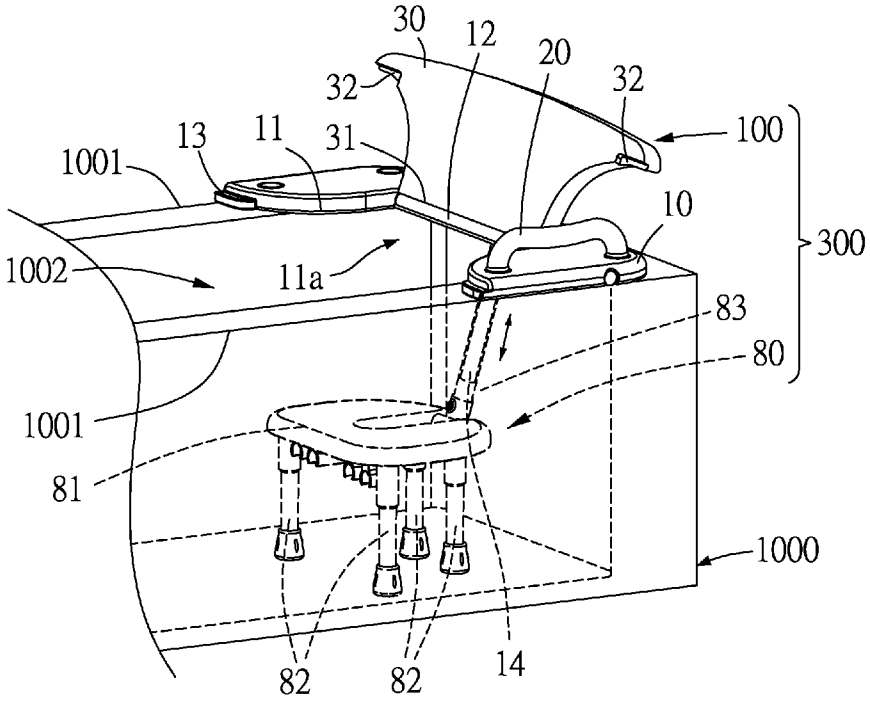
30
12
20
32
32
100
13
11
31
1001
10
300
1002
11a
83
80
1001
81
1000
82
82
14

FIG.6

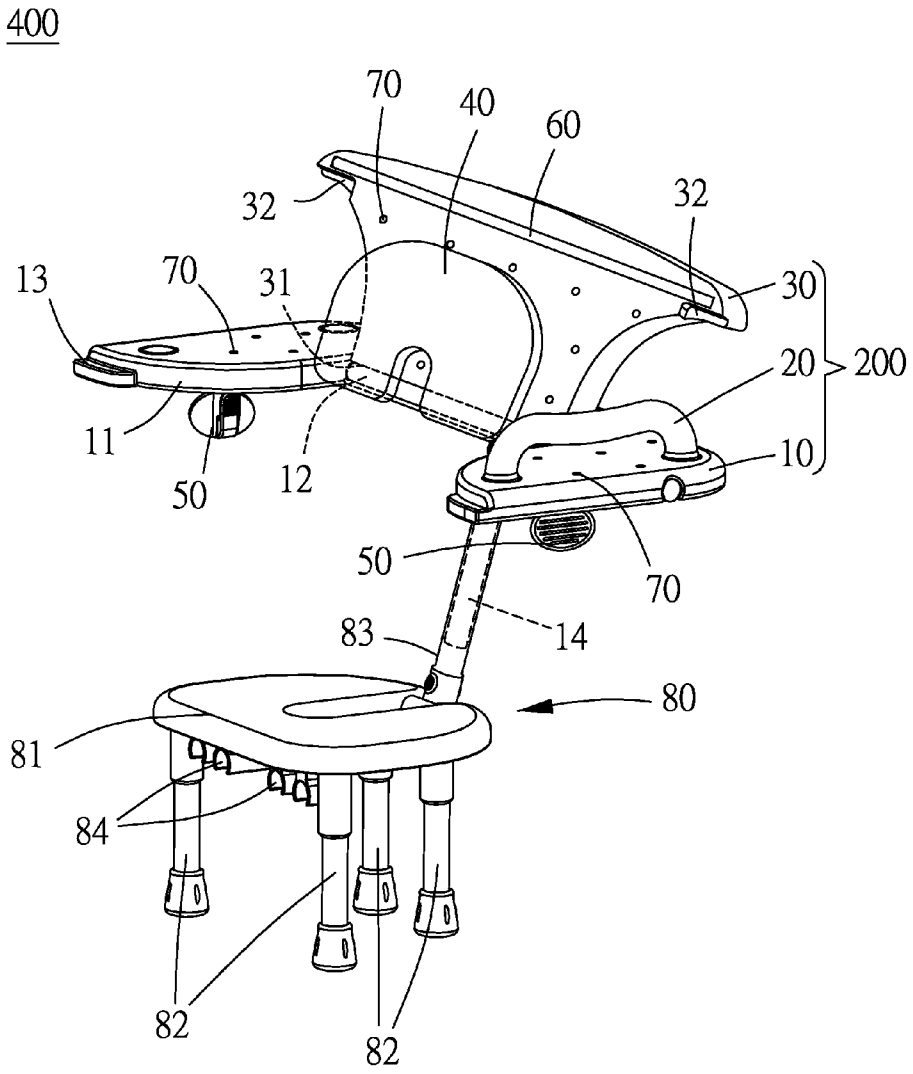
400
70
40
60
32
32
13
70
31
30
20
200
11
10
50
12
50
70
83
14
80
81
84
82
82

FIG.7

400

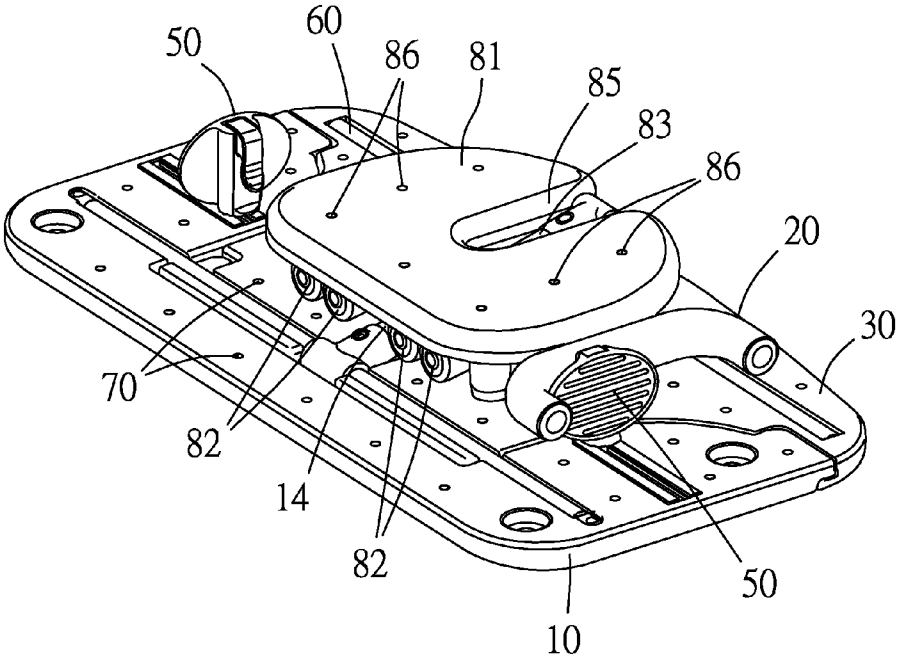

FIG.8

BATH AID STRUCTURE AND BATH AID ASSEMBLY

FIELD OF TECHNOLOGY

[0001] The present invention relates to bath aid structures, and more particularly, to a bath aid structure for assisting a disabled person in entering a bathtub.

BACKGROUND

[0002] Almost each household in a developed country today has a bathroom furnished with a bathtub in which an occupant bathes.

[0003] However, it is so difficult for an aged or disabled occupant to cross a sidewall of the bathtub that the aged or disabled occupant can do so only when assisted by another person.

[0004] Also, bathrooms and bathtubs are usually wet and thus pose a risk factor for slips and bone fractures among the elderly and the disabled. Hence, when it comes to aged or disabled occupants, a bathtub in a bathroom will be a dangerous fixture in a bathroom, unless the bathroom or the bathtub is equipped with a protective appliance.

[0005] Furthermore, unlike their young or physically fit counterparts, aged or disabled occupants are unable to stand inside a bathtub for a long while, and thus they prefer to sit inside the bathtub. However, conventional bathtubs are seldom designed to allow sedentary users to stretch their lower limbs, thereby rendering a bath difficult.

[0006] Accordingly, it is imperative to provide a bath aid structure for assisting a disabled or aged person in entering a bathtub to take a bath therein.

SUMMARY

[0007] It is not only difficult for disabled or aged persons to enter conventional bathtubs but also dangerous for them to do so.

[0008] It is an objective of the present invention to provide a bath aid structure for assisting a disabled or aged person in entering a bathtub and reducing hazards otherwise arising therefrom.

[0009] In order to achieve the above and other objectives, the present invention provides a bath aid structure for use with a bathtub. The bath aid structure comprises a first plate, at least a handle, and a second plate.

[0010] The first plate is mounted on top of two sidewalls of the bathtub. The first plate comprises: a bend portion disposed on a lateral surface of the first plate and having an opening corresponding in position to a cavity of the bathtub; a first pivotal connection portion disposed inside the bend portion and positioned distal to the opening; and a first engagement portion positioned proximate to the opening of the bend portion. The handle is disposed on top of the first plate. The second plate is received in the bend portion of the first plate. The second plate comprises: a second pivotal connection portion corresponding in position to the first pivotal connection portion of the first plate, such that the second plate is pivotally coupled to the first plate; and a second engagement portion corresponding in position to the first engagement portion of the first plate, such that the second plate is movably fixed to the first plate.

[0011] The bath aid structure of the present invention further comprises a cushion removably mounted beneath the second plate.

[0012] The bath aid structure of the present invention further comprises at least a bathtub fitting element disposed beneath the first plate, such that the first plate is fixed to the sidewalls of the bathtub. The at least a bathtub fitting element is provided in the number of two, and the two bathtub fitting elements are fixed to the two sidewalls of the bathtub, respectively.

[0013] The bath aid structure of the present invention further comprises a plate reinforcing element mounted beneath the second plate.

[0014] The bath aid structure of the present invention further comprises a plurality of plate drains penetratingly formed in the first plate and/or the second plate.

[0015] Another objective of the present invention is to provide a bath aid assembly whereby, after entering the bathtub, the disabled or aged person can be seated to take a bath therein comfortably.

[0016] In order to achieve the above and other objectives, the present invention provides a bath aid assembly for use with a bathtub, the bath aid assembly comprising: a bath aid structure, wherein a first connection rod is pivotally connected to a bottom surface of the first plate of the bath aid structure; and a seat structure, comprising: a chair pad; four support rods removably mounted beneath the chair pad; and a second connection rod pivotally coupled to the chair pad and movably connected to a first connection rod of the first plate of the bath aid structure to adjust a distance between the first plate and the chair pad.

[0017] As regards the bath aid assembly of the present invention, the chair pad of the seat structure is characterized by: a first storage portion disposed beneath the chair pad to store the support rods having been disconnected from the chair pad; and a second storage portion centrally positioned beneath the chair pad to store the first connection rod and the second connection rod.

[0018] As regards the bath aid assembly of the present invention, a plurality of chair pad drains is disposed on a surface of the chair pad.

[0019] In conclusion, the bath aid structure of the present invention comprises the first plate and the second plate whereby disabled or aged persons can enter the bathtub safely and easily. Also, the bath aid assembly of the present invention comprises the bath aid structure and a seat structure to allow disabled or aged persons to take a bath comfortably.

BRIEF DESCRIPTION

[0020] Objectives, features, and advantages of the present invention are hereunder illustrated with specific embodiments in conjunction with the accompanying drawings, in which:

[0021] FIG. **1** is an exploded view of a bath aid structure according to the first embodiment of the present invention;

[0022] FIG. **2** is a schematic view of the bath aid structure installed on a bathtub according to the first embodiment of the present invention;

[0023] FIG. **3** is a schematic view of operation of the bath aid structure according to the first embodiment of the present invention;

[0024] FIG. **4** is a schematic view of a bath aid structure according to the second embodiment of the present invention;

[0025] FIG. **5** is another schematic view of the bath aid structure according to the second embodiment of the present invention;

[0026] FIG. **6** is a schematic view of the bath aid assembly installed on a bathtub according to the second embodiment of the present invention;

[0027] FIG. **7** is a front view of the bath aid assembly according to the second embodiment of the present invention; and

[0028] FIG. **8** is a schematic view of the bath aid assembly serving a storage-related purpose according to the second embodiment of the present invention.

DETAILED DESCRIPTION

[0029] Referring to FIG. **1** through FIG. **3**, there are shown diagrams of a bath aid structure **100** according to the first embodiment of the present invention. The bath aid structure **100** is adapted for use with a bathtub **1000**. The bath aid structure **100** comprises a first plate **10**, at least a handle **20**, and a second plate **30**.

[0030] The first plate **10** is mounted on top of two sidewalls **1001** of the bathtub **1000**. The first plate **10** comprises a bend portion **11**, a first pivotal connection portion **12**, and a first engagement portion **13**. The bend portion **11** is disposed on a lateral surface of the first plate **10**. An opening **11***a* of the bend portion **11** corresponds in position to a cavity **1002** of the bathtub **1000**. The first pivotal connection portion **12** is disposed inside the bend portion **11** and positioned distal to the opening **11***a*. The first pivotal connection portion **12** is provided in the form of a shaft. The first engagement portion **13** is positioned proximate to the opening **11***a* of the bend portion **11**, as shown in FIG. **1**, that is, lying outside the bend portion **11**. However, the present invention is not limited thereto, because it is also feasible for the first engagement portion **13** to be positioned inside the bend portion **11**.

[0031] The handle **20** is removably installed on top of the first plate **10**, and its position shown in FIG. **1** merely serves an illustrative purpose. In practice, it is also feasible for the handle **20** to be installed at any other position on the first plate **10** (see FIG. **4**.)

[0032] The second plate **30** is received inside the bend portion **11** of the first plate **10**. The second plate **30** comprises a second pivotal connection portion **31** and a second engagement portion **32**. The second pivotal connection portion **31** corresponds in position to the first pivotal connection portion **12** of the first plate **10**, such that the second plate **30** is pivotally coupled to the first plate **10** to thereby allow the second plate **30** to be lifted, as shown in FIG. **3**. The second engagement portion **32** corresponds in position to the first engagement portion **13** of the first plate **10**, such that the second plate **30** is movably fixed to the first plate **10**. If a disabled or aged person sits on the second plate **30**, the second plate **30** will bear the disabled or aged person's weight because of the design of the first engagement portion **13** and the second engagement portion **32**.

[0033] Referring to FIG. **2** and FIG. **3**, the bath aid structure **100** is mounted on top of two sidewalls **1001** of the bathtub **1000**. The disabled or aged person (not shown) enters the bathtub **1000** from the left of FIG. **2**, sits on the bath aid structure **100** temporarily, moves her or his feet into the cavity **1002** of the bathtub **1000** one by one, and eventually sits on the bath aid structure **100** before beginning to wash her or his body in the bathtub **1000**. Hence, the bath aid structure **100** assists the disabled or aged person in entering the cavity **1002** of the bathtub **1000** safely and easily.

[0034] Referring to FIG. **3**, after washing her or his body in the bathtub **1000**, the disabled or aged person may want to soak her or his body in water for a while. To this end, s/he lifts the second plate **30** and then begins an immersion session. In this regard, when lifted, the second plate **30** functions as a backrest against which the disabled or aged person leans while enjoying the immersion session comfortably.

[0035] In conclusion, the present invention provides a bath aid structure which comprises a first plate and a second plate such that a disabled or aged person can enter a bathtub safely and easily in order to bathe therein. Also, the first plate comprises a first engagement portion, whereas the second plate comprises a second engagement portion, such that the disabled or aged person can sit on the bath aid structure to wash her or his body. Furthermore, the first plate comprises a first pivotal connection portion, whereas the second plate comprises a second pivotal connection portion, such that the disabled or aged person can enjoy an immersion session comfortably.

[0036] Referring to FIG. **4** and FIG. **5**, there are shown schematic views of a bath aid structure **200** according to the second embodiment of the present invention. The bath aid structure **200** is substantially identical to the bath aid structure **100**, except the following. The bath aid structure **200** further comprises a cushion **40** removably mounted beneath the second plate **30** such that, after lifting the second plate **30**, the disabled or aged person can lean against the cushion **40** comfortably.

[0037] Referring to FIG. **5**, the bath aid structure **200** further comprises at least a bathtub fitting element **50** disposed beneath the first plate **10**. In an embodiment of the present invention, the at least a bathtub fitting element **50** is in the number of two. With the two bathtub fitting elements **50**, the first plate **10** is fixed to the sidewalls **1001** of the bathtub **1000** to thereby fix the bath aid structure **200** in place.

[0038] Furthermore, the bath aid structure **200** further comprises a plate reinforcing element **60** disposed beneath the second plate **30** and adapted to reinforce the second plate **30**. Hence, the second plate **30** has sufficient mechanical strength to bear the disabled or aged person's weight.

[0039] Furthermore, with the bath aid structure **100** being used by disabled or aged persons in taking a bath, a trace of residual water is likely to accumulate on the surface of the bath aid structure **100**, thereby posing a problem with blots and hygiene. This problem is solved by the bath aid structure **100**. The bath aid structure **200** further comprises a plurality of plate drains **70** penetratingly formed in the first plate **10** and/or the second plate **30** and adapted to discharge water from the first plate **10** and/or the second plate **30**.

[0040] Referring to FIG. **6**, the present invention further provides a bath aid assembly **300** whereby the disabled or aged person is seated inside the bathtub comfortably.

[0041] Referring to FIG. **6**, the bath aid assembly **300** comprises the bath aid structure **100** and a seat structure **80**. A first connection rod **14** is pivotally connected to the bottom surface of the first plate **10** of the bath aid structure **100**.

[0042] The seat structure **80** comprises a chair pad **81**, four support rods **82**, and a second connection rod **83**. The chair pad **81** comes in the form of a plastic board, a silicone pad, or any well-known form. The support rods **82** are removably mounted beneath the chair pad **81** and adapted to support the chair pad **81**. The second connection rod **83** is pivotally coupled to the chair pad **81**. The second connection rod **83** is movably connected to the first connection rod **14** of the first plate **10** of the bath aid structure **100** in a manner to allow a user to pull the first connection rod **14** relative to the second

connection rod **83** or insert the first connection rod **14** into the second connection rod **83**, in the direction indicated by the double-headed arrow shown in FIG. **6**, to thereby adjust the distance between the first plate **10** and the chair pad **81**, such that the seat structure **80** can be applicable to two scenarios, namely deep said cavity **1002** of the bathtub **1000**, and shallow said cavity **1002** of the bathtub **1000**. In the scenario where the cavity **1002** is deep, the user pulls the first connection rod **14** away from the second connection rod **83** to thereby increase the distance between the first plate **10** and the chair pad **81** appropriately. In the scenario where the cavity **1002** is shallow, the user pushes the first connection rod **14** into the second connection rod **83** to thereby decrease the distance between the first plate **10** and the chair pad **81** appropriately.

[0043] In conclusion, the present invention provides a bath aid assembly with a seat structure and a liftable second plate to enable disabled or aged persons to take a bath comfortably. Also, the bath aid assembly comprises a first connection rod and a second connection rod which are designed to allow the bath aid assembly to be applicable to bathtubs which come in different dimensions.

[0044] Referring to FIG. **7** and FIG. **8**, there are shown schematic views of a bath aid assembly **400** according to the second embodiment of the present invention. The bath aid assembly **400** is substantially identical to the bath aid assembly **300**, except the following. The bath aid assembly **400** comprises the bath aid structure **200** and the seat structure **80**. A first storage portion **84** and a second storage portion **85** are disposed beneath the chair pad **81** of the seat structure **80**.

[0045] The first storage portion **84**, which is disposed beneath the chair pad **81**, stores the support rods **82** which have been disconnected from the chair pad **81**. The second storage portion **85**, which is centrally positioned beneath the chair pad **81**, stores the first connection rod **14** and the second connection rod **83**. Related details are described below.

[0046] After taking a bath, users may want to store the bath aid assembly **400** in a storage cabinet. To put aside the bath aid assembly **400** for later use, the user follows the steps described below: remove the cushion **40**; remove the support rods **82** and put them in the first storage portion **84**; turn the chair pad **81** relative to the first connection rod **14** and the second connection rod **83** while turning the first connection rod **14** and the second connection rod **83** relative to the first plate **10**, such that the first connection rod **14** and the second connection rod **83** are received in the second storage portion **85**; and remove the handle **20**. By following the aforesaid steps, the users can store the bath aid assembly **400** easily and in a space-saving manner.

[0047] Furthermore, with the bath aid assembly **300** being used by disabled or aged persons in taking a bath, a trace of residual water is likely to accumulate on the surface of the chair pad **81** of the bath aid assembly **300**, thereby posing a problem with blots and hygiene. This problem is solved by the bath aid assembly **400**. Referring to FIG. **8**, a plurality of chair pad drains **86** is disposed on the surface of the chair pad **81** of the bath aid assembly **400** and adapted to drain water from the chair pad **81**.

[0048] In conclusion, the present invention provides a bath aid structure which comprises a first plate and a second plate to enable a disabled or aged person to enter a bathtub safely and easily in order to bathe therein. Also, the present invention provides a bath aid assembly which comprises the bath aid structure and a seat structure to enable disabled or aged persons to wash and soak their bodies in the bathtub comfortably.

[0049] The present invention is disclosed above by preferred embodiments. However, persons skilled in the art should understand that the preferred embodiments are illustrative of the present invention only, but should not be interpreted as restrictive of the scope of the present invention. Hence, all equivalent modifications and replacements made to the aforesaid embodiments should fall within the scope of the present invention. Accordingly, the legal protection for the present invention should be defined by the appended claims.

What is claimed is:

1. A bath aid structure for use with a bathtub, the bath aid structure comprising:
- a first plate mounted on top of two sidewalls of the bathtub and comprising:
  - a bend portion disposed on a lateral surface of the first plate and having an opening corresponding in position to a cavity of the bathtub;
  - a first pivotal connection portion disposed inside the bend portion and positioned distal to the opening; and
  - a first engagement portion positioned proximate to the opening of the bend portion;
- at least a handle disposed on top of the first plate; and
- a second plate received in the bend portion of the first plate and comprising:
  - a second pivotal connection portion corresponding in position to the first pivotal connection portion of the first plate, such that the second plate is pivotally coupled to the first plate; and
  - a second engagement portion corresponding in position to the first engagement portion of the first plate, such that the second plate is movably fixed to the first plate.

2. The bath aid structure of claim **1**, further comprising a cushion removably mounted beneath the second plate.

3. The bath aid structure of claim **1**, further comprising at least a bathtub fitting element disposed beneath the first plate, such that the first plate is fixed to the sidewalls of the bathtub.

4. The bath aid structure of claim **2**, further comprising at least a bathtub fitting element disposed beneath the first plate, such that the first plate is fixed to the sidewalls of the bathtub.

5. The bath aid structure of claim **3**, wherein the at least a bathtub fitting element is in the number of two and fixed to the sidewalls of the bathtub, respectively.

6. The bath aid structure of claim **4**, wherein the at least a bathtub fitting element is in the number of two and fixed to the sidewalls of the bathtub, respectively.

7. The bath aid structure of claim **1**, further comprising a plate reinforcing element disposed beneath the second plate.

8. The bath aid structure of claim **1**, further comprising a plurality of plate drains penetratingly formed in at least one of the first plate and the second plate.

9. A bath aid assembly for use with a bathtub, the bath aid assembly comprising:
- a bath aid structure of claim **1**, wherein a first connection rod is pivotally connected to a bottom surface of the first plate of the bath aid structure; and
- a seat structure, comprising:
  - a chair pad;
  - four support rods removably mounted beneath the chair pad; and
  - a second connection rod pivotally coupled to the chair pad and movably connected to a first connection rod

of the first plate of the bath aid structure to adjust a distance between the first plate and the chair pad.

10. The bath aid assembly of claim **9**, wherein the chair pad of the seat structure is characterized by:

a first storage portion disposed beneath the chair pad to store the support rods having been disconnected from the chair pad; and

a second storage portion centrally positioned beneath the chair pad to store the first connection rod and the second connection rod.

11. The bath aid assembly of claim **9**, wherein a plurality of chair pad drains is disposed on a surface of the chair pad.

12. The bath aid assembly of claim **10**, wherein a plurality of chair pad drains is disposed on a surface of the chair pad.

* * * * *