W. H. HOADLEY.

STOVES.

No. 193,655. Patented July 31, 1877.

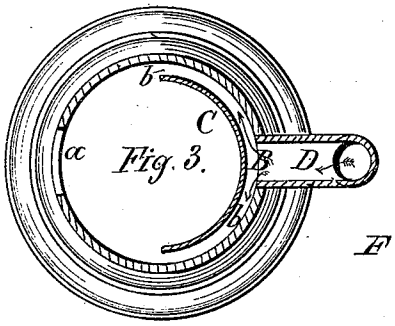

Fig. 3.

Fig. 1.

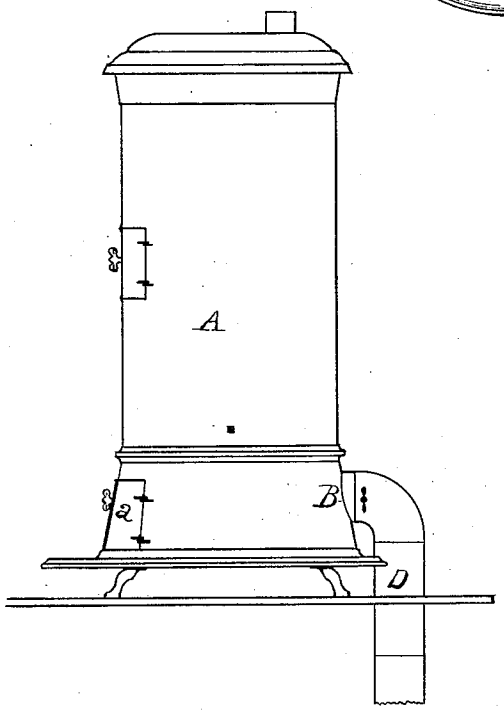

Fig. 2.

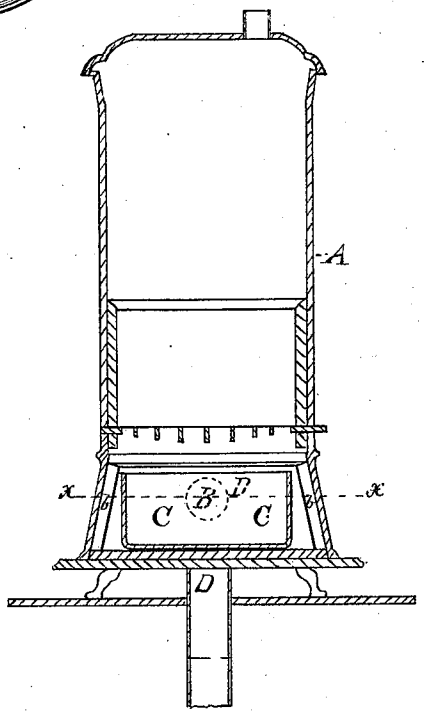

WITNESSES

H. C. Merrick

Percy P. Rogers

INVENTOR

William H. Hoadley

By his Atty J. H. Robin

N. PETERS, PHOTO-LITHOGRAPHER, WASHINGTON, D. C.

UNITED STATES PATENT OFFICE.

WILLIAM H. HOADLEY, OF CHENANGO FORKS, NEW YORK.

IMPROVEMENT IN STOVES.

Specification forming part of Letters Patent No. **193,655**, dated July 31, 1877; application filed April 3, 1876.

To all whom it may concern:

Be it known that I, WILLIAM H. HOADLEY, of Chenango Forks, in the county of Broome and State of New York, have invented a new and useful Improvement in Stoves, which improvement is fully set forth in the following specification, reference being had to the accompanying drawings.

My invention consists in the combination of the stove and air-conductor, which communicate with a separate apartment, in such a manner that the entire draft of the stove shall be taken from said apartment, by which means a constant circulation is maintained in the apartment from which the draft is received, and a uniform temperature insured in the room in which the stove is placed.

The object of the invention is to equalize the temperature in the apartment in which the stove is used, to ventilate the apartment with which the stove communicates, and to economize the use of fuel.

Figure 1 in the accompanying drawings is a view of a stove embodying my invention. Fig. 2 is a transverse vertical section of the same, showing the air-conductors and damper, and the flues in the base of the stove. Fig. 3 is a horizontal section taken on line *x x*, Fig. 2.

The stove A is so made as to prevent the admission of air to it from the room in which it is placed. The door *a* fits closely, and is only used for the removal of the ashes.

D is a draft-pipe extending from an outside apartment, and communicating directly with the ash-box below the grate through an opening, B. In order to prevent the lodging of ashes in pipe D, I employ an inner supplemental wall, C, Fig. 3, which extends about half-way around the ash-box, and is attached at its upper edge to the outer wall of said box, above the opening B, Fig. 2. The lower edge of wall C is so attached to the ash-box, as to provide a semicircular flue, *b b*, which distributes the air evenly beneath the grate.

When practicable I prefer to place this conductor in communication with the cellar, as it increases the draft, and conveys the usual injurious gases into the combustion-chamber of the stove, whereby the ventilation of the apartment may be much improved. By the entire exclusion of the draft of the stove from the apartment in which it is used, the usual currents of cold air toward the stove are prevented, the warm air in the room retained, the temperature equalized, and a great saving of fuel accomplished. The apartment may then be ventilated in the usual manner. It will be seen that my invention can be simply and cheaply applied to any of the ordinary stoves.

Having thus described my invention, what I claim as new, and desire to secure by Letters Patent, is—

The combination, with the tight stove A, of pipe D, ash-guard C, and flues *b b*, all arranged and constructed as described.

WM. H. HOADLEY.

Witnesses:
B. T. STRICKLAND,
GEO. HOADLEY.