Feb. 14, 1967 J. M. LUKER 3,303,964

PLASTIC CONTAINER FOR CAKES AND THE LIKE

Filed March 19, 1964 5 Sheets-Sheet 1

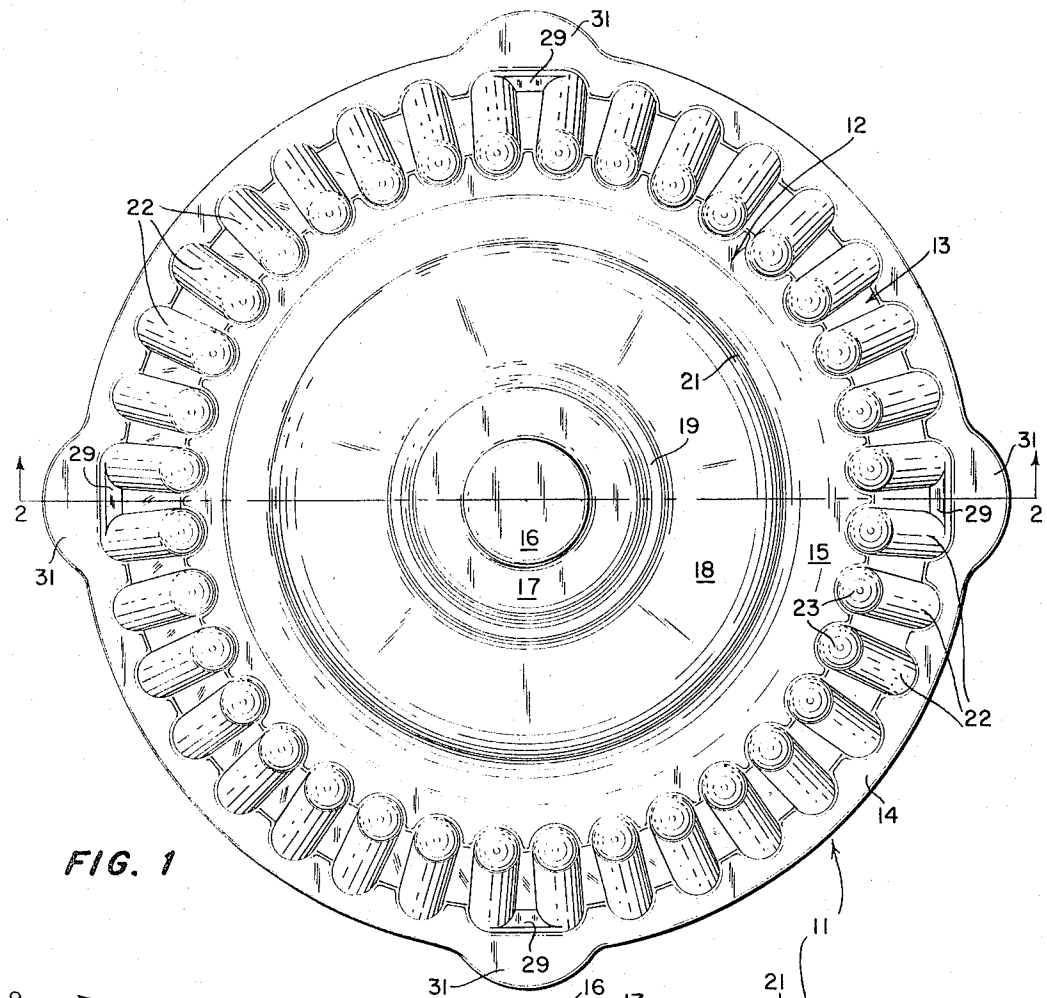

FIG. 1

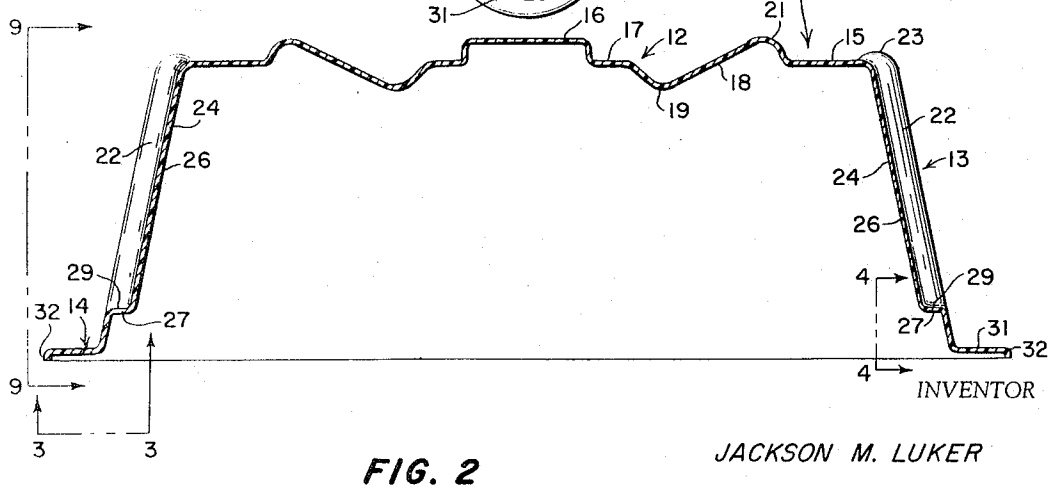

FIG. 2

INVENTOR

JACKSON M. LUKER

BY Strauch, Nolan & Neale

ATTORNEYS

Feb. 14, 1967 J. M. LUKER 3,303,964

PLASTIC CONTAINER FOR CAKES AND THE LIKE

Filed March 19, 1964 5 Sheets-Sheet 3

FIG. 15

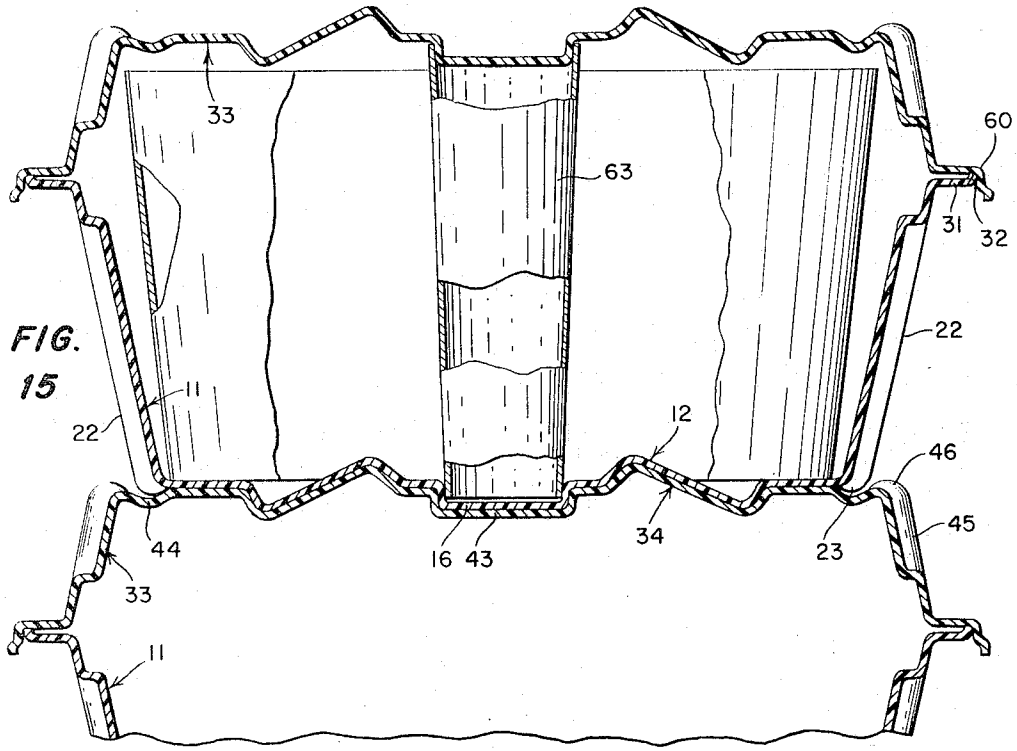

FIG. 3

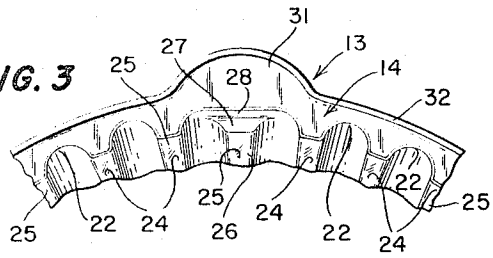

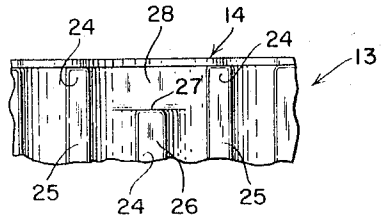

FIG. 4

FIG. 7

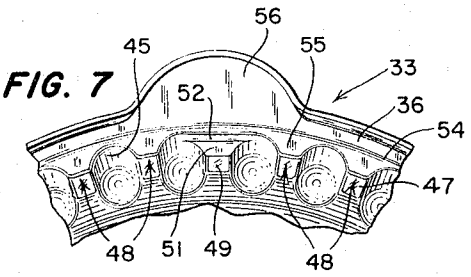

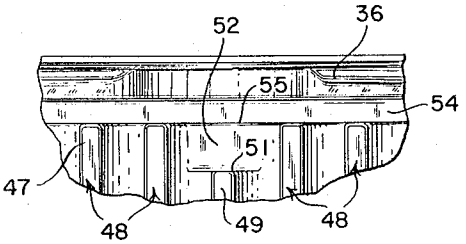

FIG. 8

INVENTOR

JACKSON M. LUKER

BY Strauch, Nolan & Neale

ATTORNEYS

Feb. 14, 1967 J. M. LUKER 3,303,964

PLASTIC CONTAINER FOR CAKES AND THE LIKE

Filed March 19, 1964 5 Sheets-Sheet 3

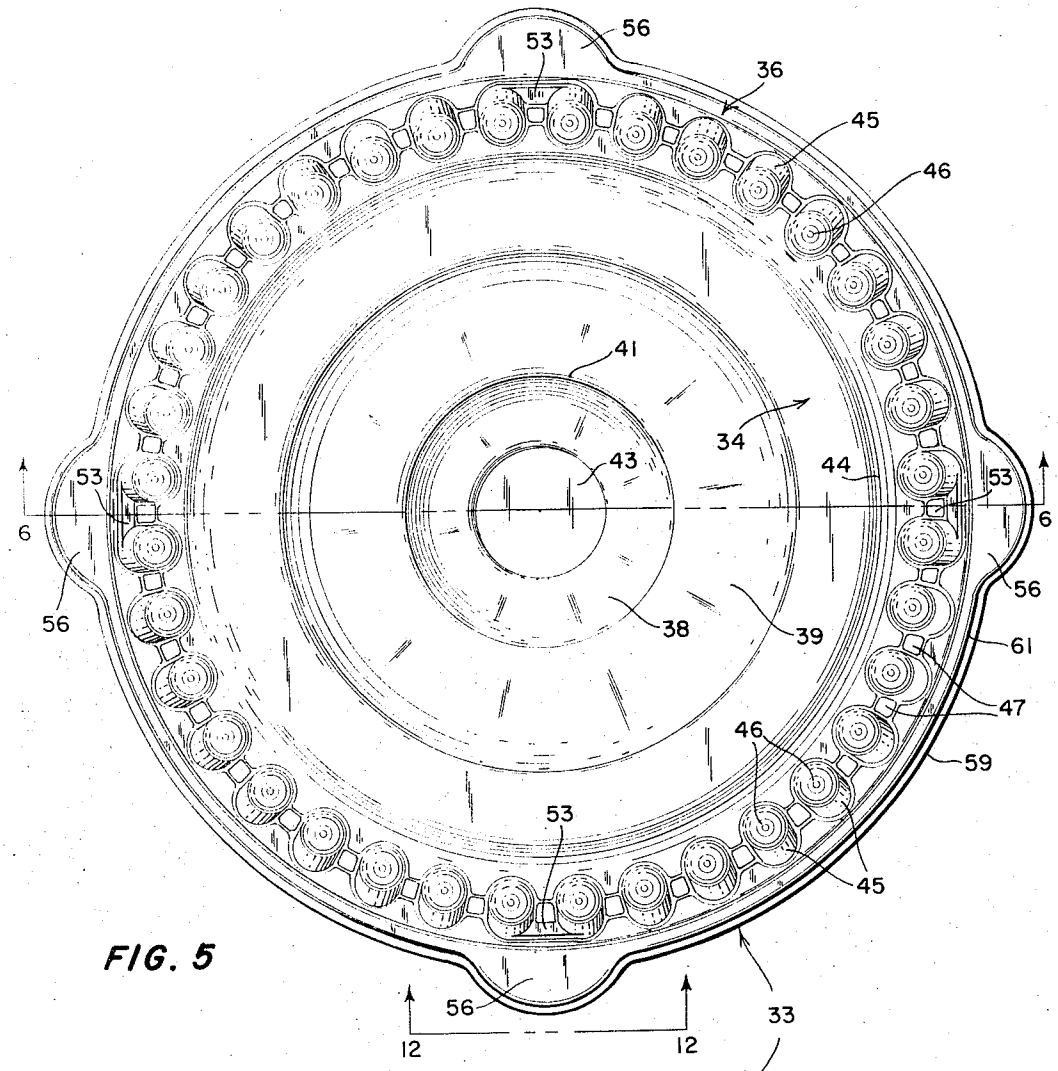

FIG. 5

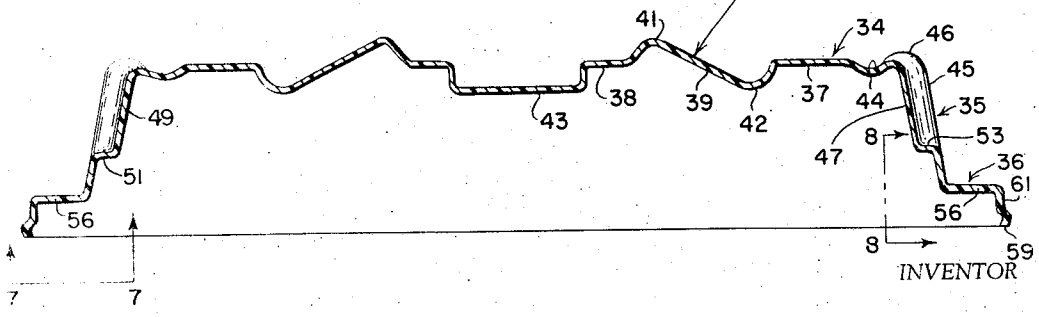

FIG. 6

INVENTOR
JACKSON M. LUKER

BY Strauch, Nolan & Neale
ATTORNEYS

Feb. 14, 1967 J. M. LUKER 3,303,964

PLASTIC CONTAINER FOR CAKES AND THE LIKE

Filed March 19, 1964 5 Sheets-Sheet 4

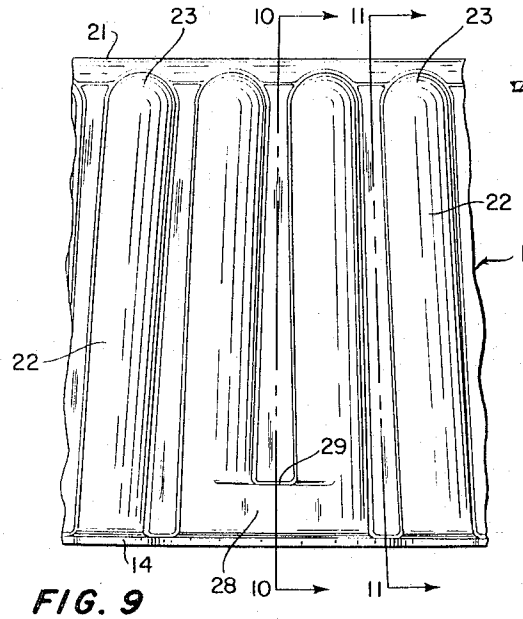

FIG. 9

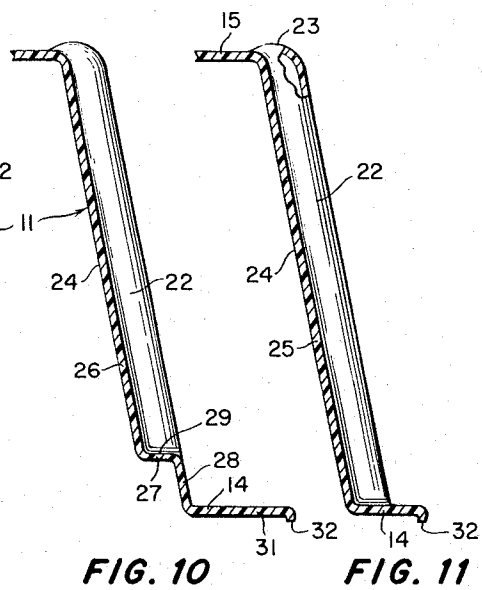

FIG. 10

FIG. 11

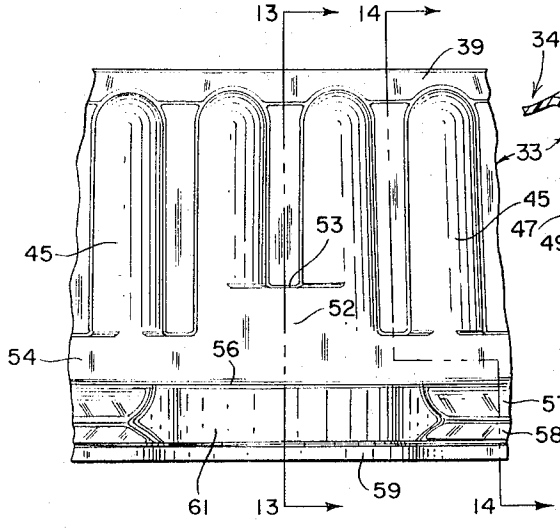

FIG. 12

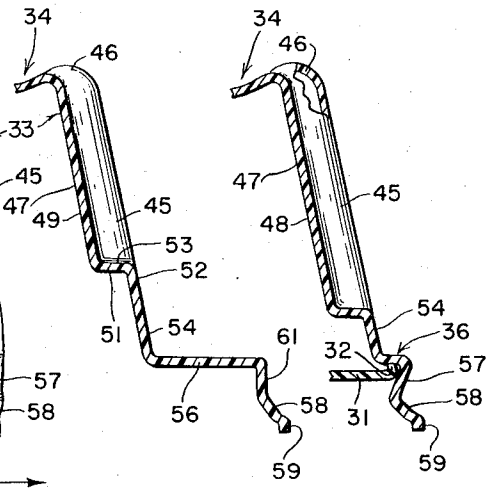

FIG. 13

FIG. 14

INVENTOR

JACKSON M. LUKER

BY Strauch, Nolan & Neale

ATTORNEYS

Feb. 14, 1967 J. M. LUKER 3,303,964

PLASTIC CONTAINER FOR CAKES AND THE LIKE

Filed March 19, 1964 5 Sheets-Sheet 5

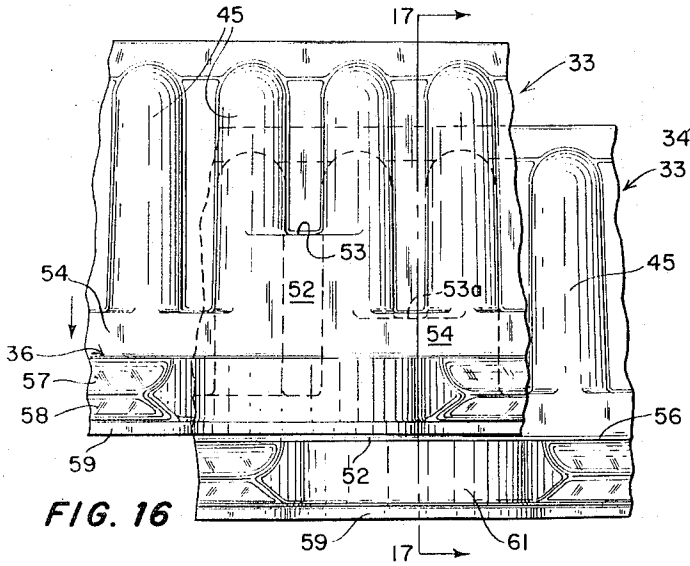

FIG. 16

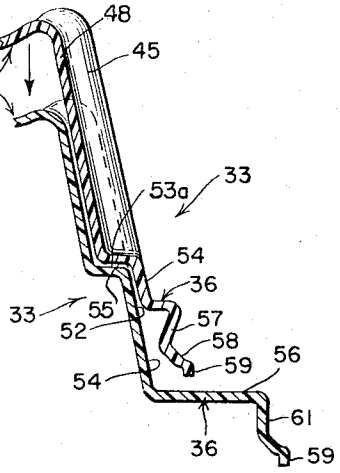

FIG. 17

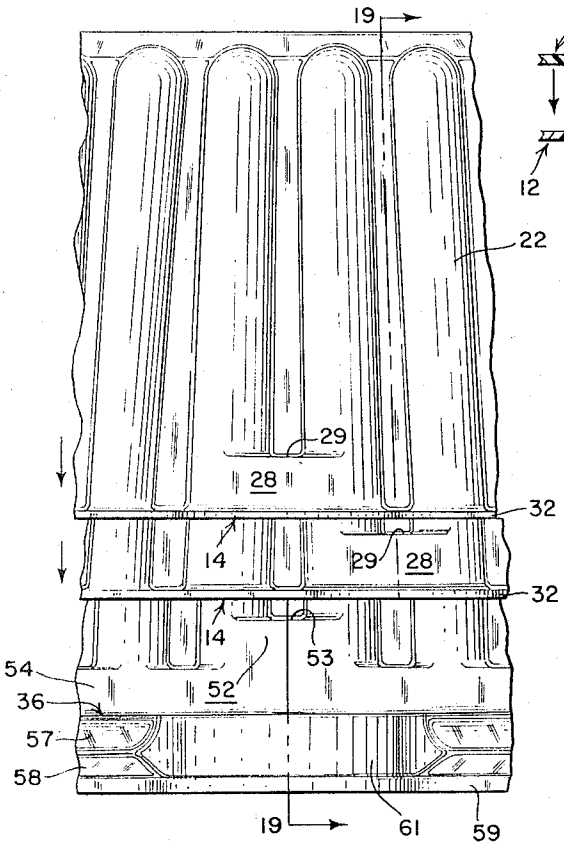

FIG. 18

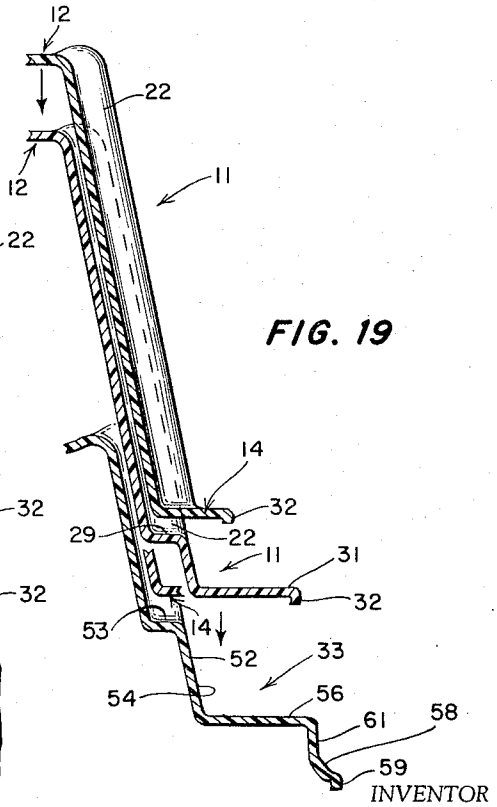

FIG. 19

INVENTOR

JACKSON M. LUKER

BY Strauch, Nolan & Neale

ATTORNEYS

United States Patent Office 3,303,964 Patented Feb. 14, 1967

3,303,964

PLASTIC CONTAINER FOR CAKES AND THE LIKE

Jackson M. Luker, 307 W. Oregon St., Urbana, Ill. 61801

Filed Mar. 19, 1964, Ser. No. 353,043
5 Claims. (Cl. 220—97)

This invention relates to molded plastic containers and particularly to such containers which are relatively fragile and are formed for damage free stacking.

In its preferred embodiment the invention is concerned with very light-weight thin-walled transparent cake display containers that consist of individual top and bottom sections of special configurations enabling them to be stacked without damage.

It is therefore the major object of this invention to provide a novel light-weight thin-walled molded plastic container structure adapted for stacking without crushing the walls.

A further object of the invention is to provide a novel container assembly structure that enables the container members, such as the body and pan, to be nested and stacked with their formed relatively brittle and fragile thin-walled ends held spaced to prevent contact and crushing.

Another object of the invention is to provide novel light-weight plastic container members wherein special ledge structure provides predetermined axial spacing when the members are nested.

Another object of the invention is to provide a novel molded light-weight thin-walled plastic container member construction having ledges at a predetermined level for axially engaging coacting rim, shoulder and like axial surfaces of a nested member for arresting relative movement and determining the final position of nested members so as to prevent crushing of the member walls during nesting.

Another object of the invention is to provide a novel molded light-weight thin-walled plastic container body or pan having a special fluted side wall construction for predetermined spacing coaction during nesting.

Further objects of the invention will appear as the description proceeds in connection with the appended claims and the annexed drawings wherein:

FIGURE 1 is a top plan view of the container body according to a preferred embodiment of the invention;

FIGURE 2 is a section on line **2**—**2** of FIGURE 1 showing details of configuration, particularly the ledge structure;

FIGURE 3 is a fragmentary view looking into the open end of the body of FIGURE 1;

FIGURE 4 is a fragmentary interior elevational view of the sidewall of the body of FIGURE 1;

FIGURE 5 is a top plan view of a pan adapted to fit with the container body of FIGURE 1;

FIGURE 6 is a section on line **6**—**6** of FIGURE 5;

FIGURE 7 is a fragmentary view looking into the open end of the pan of FIGURES 5 and 6;

FIGURE 8 is a fragmentary internal elevation showing the ledge structure in the pan;

FIGURE 9 is a fragmentary external side elevation of the body of FIGURES 1 and 2 substantially on line **9**—**9** of FIGURE 2;

FIGURES 10 and 11 are sections respectively through lines **10**—**10** and **11**—**11** in FIGURE 9;

FIGURE 12 is an enlarged fragmentary side elevation of the pan of FIGURES 5 and 6 substantially on line **12**—**12** of FIGURE 5;

FIGURES 13 and 14 are sections on lines **13**—**13** and **14**—**14** respectively of FIGURE 12;

FIGURE 15 is a fragmentary side elevation showing stacking of the assembled container body and pan members which enclose cakes or the like, and particularly the interfitting reversed end configurations of the body and pan;

FIGURE 16 is a fragmentary side elevation illustrating the stacking of two pans;

FIGURE 17 is a section on line **17**—**17** of FIGURE 16 showing the action of the ledges in limiting axial movement of stacked container pans;

FIGURE 18 is a fragmentary elevation showing stacked body and pan members; and

FIGURE 19 is a section on line **19**—**19** of FIGURE 18.

Referring to the drawings, FIGURES 1 and 2 show a preferred integral container body **11** that is vacuum molded from a suitable plastic sheet material. Body **11** comprises an end wall **12**, an annular side wall **13** and an annular flat rim **14** surrounding an open end.

End wall **12** comprises an annular flat outer zone **15** coaxial with and lying substantially in a plane perpendicular to the axis of the body, and a central flat axially projecting button section **16** the base of which is surrounded by a narrow annular inner zone **17** lying substantially in the plane of zone **15**. Between the outer and inner annular zones is an inclined annular generally conical section **18** having its apex on the body axis within the body and connected at its inner and outer edges to zones **17** and **15** respectively by reversely curved rounded axially projecting ribs **19** and **21** of about the same size. Rib **19** is concave outwardly and rib **21** is concave inwardly with respect to the body. A plane containing button **16** is tangent to the rib **21** and perpendicular to the body axis.

Side wall **13** is essentially conical, diverging from the closed end **12**. Formed in side wall **13** are a multiplicity of equally spaced outwardly convex inwardly concave rounded fluted sections **22** that, except for four to be later described, extend longitudinally from end wall **12** to rim **14** as shown best in FIGURE 11. Adjacent the closed end these fluted sections **22** have rounded outwardly convex lower ends **23** that merge smoothly into the outer zone **15** of end wall **12**.

As shown best in FIGURE 3, the inwardly concave surfaces of fluted sections **22** merge into internal surfaces **24** that all lie in a circular envelope, and looking into the open end of the container body there appears to be a multiplicity of equally spaced internally projecting flutes **25** that extend longitudinally and are disposed circumferentially between the flutes **22**.

In the preferred embodiment thirty six flutes **25** are formed and all are of equal length except four designated at **26** (FIGURE 3) which terminate the same distance short of the rim **14** to form a plurality of internal ledges **27** that are disposed at the same level axially facing the open end of the body.

As shown best in FIGURE 4, side wall **13** extends continuously between the bottoms of adjacent flutes **22** in the areas **28** between the ledges **27** and rim **14**, so that effectively circumferentially wide pockets are provided at **28** for access to ledge **27** as will appear. These side wall areas **28** appear externally (FIGURE 9) to define external ledges **29** between the adjacent flutes **22** axially opposite ledges **27** and facing the closed end **15** of the body.

Rim **14** is formed with four enlarged outwardly projecting tabs **31**, and as shown in FIGURE 1 these tabs are radially centered with ledges **29**. All around the outer edge of rim **14** is a continuous shallow turned over bead **32**.

FIGURES 5 and 6 show a pan **33** for association with the container body of FIGURES 1 and 2 to complete an enclosed container assembly. Pan **33** comprises a closed end wall **34**, a tapered annular side wall **35** and a flat annular rim **36**.

End wall **34** comprises an outer annular flat zone **37** and an inner annular flat zone **38** lying substantially in

the same plane and connected to an intermediate annular inclined zone **39** by reversely curved rounded annular ribs **41** and **42**. Inner zone **38** surrounds the base of a flat button **43** which projects inwardly of the pan and lies in a plane displaced from zones **37** and **38**.

Outwardly of zone **37** is formed an outwardly concave rounded annular recess **44** which merges smoothly into the side wall **35**.

Side wall **35** is formed with a multiplicity of longitudinally extending outwardly convex inwardly concave rounded fluted sections **45** that are equally spaced circumferentially and are formed with rounded outwardly convex lower ends **46** where they merge into the end wall **34**. The inwardly concave surfaces of fluted sections **45** merge into internal surfaces **47** that (FIGURES 6 and 7) all lie in a circular envelope, and looking into the open end of the pan there appears to be a multiplicity of equally spaced internally projecting flutes **48** that extend longitudinally and are circumferentially disposed between flutes **45**.

In the preferred embodiment thirty six flutes **48** are formed and all are of equal length except four designated at **49** which terminate the same distance short of the rim and thereby form a plurality of internal ledges **51** at the same level that face axially the open end of the pan.

As shown in FIGURE 8 the side wall **34** extends between the bottoms of adjacent flutes **45** in the areas **52** beyond the ledges **51** so that effectively circumferentially wide pockets are formed at **52** for access to ledges **51**.

These side wall areas **52** appear externally (FIGURE 12) to define external ledges **53** that axially face the closed end of the pan.

Whereas in the container body **11** the flutes **22** extend all of the way to the rim **14** to open at the rim as shown in FIGURE 3, the flutes **45** of the container pan all terminate short of the rim (FIGURES 8, 12 and 14) and merge into a continuous non-fluted annular side wall section **54** that is disposed radially outwardly of the flutes and is continuous with external area **52**. Looking into the open end of the pan, this structure provides a continuous axially facing internal shoulder surface **55** that is periodically wider across the ends of interior flutes **48**. In some embodiments the surface **55** may not extend across the concave flute surfaces and may only comprise the ends of flutes **48**, but it is effectively continuous in that respect.

Rim **36** is formed with four outwardly enlarged tabs **56** that are radially aligned with the ledges **51**. Beyond rim **36** the cover is sequentially formed with an axially and inwardly extending annular section **57** and an axially and outwardly extending annular section **58** that terminates in a continuous annular axially projecting end bead **59**. The inward inclination of the wall at **57** merges to straight wall sections within the tab regions as indicated at **61** in FIGURE 13.

It may sometimes be desired to stack filled container assemblies, and this arrangement is shown in FIGURE 15 wherein the end walls of the container body and pan are externally of reverse configuration to snugly interfit and thereby prevent lateral relative displacement. It will be noted that the projecting rounded ends of the flutes of the respective pan and body members are radially displaced in this arrangement, with the flute ends **23** of the body projecting into the annular pan recess **44**. This protects the fragile structure while at the same time interlocking the adjacent assemblies to prevent tipping or lateral displacement. The button sections **16** and **43** provide a good telescopic interlock which insures semi-rigid centered stacking of several container assemblies.

Where the container body and pan are assembled to enclose a cake or the like, as shown in FIGURE 15, the rim bead **32** interlocks into the corner **60** defined by wall section **57** and rim **36** with a snap fit as shown in FIGURE 14. This holds the pan and body together in assembly.

FIGURES 16 and 17 show stacking of two pan members **33** in nested relation. These are shown with the internal, external ledges **51**, **53** of the upper pan displaced circumferentially the distance of one flute from the corresponding ledges of the lower pan. It will be seen that the external edge denoted **53***a* of the lower pan abuts flatly on surface **55** at the end of an internal flute **48**, and this is the situation at all four ledges **53** of the lower pan. This provides a nesting arrangement whereby the fluted side walls interfit snugly and the delicately rounded ends of the flutes are maintained in axially spaced protected relation as illustrated in FIGURES 16 and 17.

Any number of pan elements can be so stacked, it being preferred to displace each added pan circumferentially one flute in the assembly.

FIGURES 18 and 19 illustrate nested stacking of two container body members and one pan member to prevent damage. The container body members **11** in any number may be nested one within the other as shown, and relative axial movement between each element is arrested when (FIGURE 14) the flat rim **14** of the upper member **11** abuts the external ledges **29** of the lower member **11**. In order to prevent aligning the ledges **29** in adjacent members it is only necessary to be sure that the tabs **31** of the respective members are angularly displaced at random. Similarly a pan **33** may be nested into the open end of the lower container body member **11** until external ledges **53** of the pan engage the flat rim **14** of the container member **11**. Successive pans **33** may now be nested into the pan **33** of FIGURES 18 and 19 in the same manner as shown in FIGURES 16 and 17.

Thus any number of body and pan members may be stacked in nested relation, and their relatively delicate closed end wall formations are held axially spaced in the stacking. The bodies and pans may be separately stacked, or they may be placed on the same stack in the order shown in FIGURES 18 and 19. In the members the body rim surface **14** and the shoulder surface **55** provide abutments for engaging ledges on the associated nested members.

The members **11** and **33** are each integrally molded from transparent sheets of low density polystyrene about 0.015 inch in thickness. Suitably shaped drawing dies (not shown) vacuum form the members in a single operation. The formed members are therefore clear plastic articles whose walls, while stiff and possessed of an inherent flexibility when subjected to tension, are relatively fragile and subject to crushing especially in the fluted end regions when stacked in nested relation. This crushing is prevented in the invention.

As pointed out the cover and the body have the same configuration in reverse. This adds strength to the members and permits stacking in series, giving more rigidity to the stack. When sold to the customer the pan in which the cake is baked or to be baked is placed in the larger member **11** and is covered with the smaller member **33**. After the cake is baked the two members are reversed. The smaller member becomes a serving tray and the larger the cover for the cake. When used by the housewife as a cover the center knob on the bottom of the larger member permits the larger member to be lifted. The depressed button in the center of the smaller member also fiits into and rests on the central heat tube of the aluminum foil cooking pan and this makes for a more rigid container in shipment. The heat tube **63** of FIGURE 15 which is a part of the aluminum pan is used in the baking of sponge type cakes.

The invention may be embodied in other specific forms without departing from the spirit or essential characteristics thereof. The present embodiments are therefore to be considered in all respects as illustrative and not restrictive, the scope of the invention being indicated by the appended claims rather than by the foregoing description, and all changes which come within the mean-

ing and range of equivalency of the claims are therefore intended to be embraced therein.

What is claimed and desired to be secured by Letters Patent is:

1. An integral thin walled lightweight container member made of relatively fragile crushable material having an end wall and an annular side wall extending outwardly to an open end, said side wall being formed with a plurality of longitudinal internal flutes extending from said end wall toward said open end, the outer ends of most of said flutes terminating in a plane substantially adjacent said open end, and with remaining few flutes being shorter and disposed in selected circumferentially spaced relation and terminating in axially facing external ledges each located circumferentially between two adjacent longer flutes and disposed substantially in a plane that is closer to said end wall than the plane containing the outer ends of the longer of said flutes.

2. The container member defined in claim 1 wherein a flat rim is formed around said open end and said longer of the flutes terminate at said rim.

3. The container member defined in claim 1 wherein a flat rim is formed around said open end and said side wall is formed with a circumferentially continuous section lying longitudinally between the outer ends of said longer flutes and the rim.

4. The container member defined in claim 1 wherein a flat rim is formed around said open end and outwardly projecting tabs are formed on the rim in substantially radial alignment with said ledges.

5. In the container defined in claim 1, said side wall extending directly between the bottoms of said two adjacent longer flutes to provide open pockets above each of said short flutes.

References Cited by the Examiner

UNITED STATES PATENTS

1,626,930	5/1927	Grogg	220—97
2,880,859	4/1959	Tupper	220—60 X
2,889,072	6/1959	Lapham	220—97
3,001,665	9/1961	Tomarin	220—97 X
3,066,824	12/1962	Bostrom	220—60
3,104,044	9/1963	Reifers	220—97 X
3,140,807	7/1964	Bostrom	229—2.5–280
3,147,879	9/1964	Scholtz	220—97 X
3,151,799	10/1964	Engles	229—2.5–287
3,154,215	10/1964	Vesconte	229—97
3,193,174	7/1965	Glasband	220—97 X

THERON E. CONDON, *Primary Examiner.*

GEORGE E. LOWRANCE, LOUIS G. MANCENE, *Examiners.*