(12) INTERNATIONAL APPLICATION PUBLISHED UNDER THE PATENT COOPERATION TREATY (PCT)

(19) World Intellectual Property Organization
International Bureau

(43) International Publication Date
12 December 2024 (12.12.2024)

WIPO | PCT

(10) International Publication Number
WO 2024/253530 A1

(51) International Patent Classification:
C01B 3/04 (2006.01) *B01J 19/24* (2006.01)
C01B 3/26 (2006.01)

(21) International Application Number:
PCT/NL2024/050298

(22) International Filing Date:
06 June 2024 (06.06.2024)

(25) Filing Language: English

(26) Publication Language: English

(30) Priority Data:
63/471,817 08 June 2023 (08.06.2023) US

(71) Applicant: **HYET NO CARBON B.V.** [NL/NL]; Westervoortsedijk 71 K, 6827 AV Arnhem (NL).

(72) Inventors: **SHAH, Javishk**; c/o Westervoortsedijk 71 K, 6827 AV Arnhem (NL). **DE WIT, Ellart Kostijn**; c/o Westervoortsedijk 71 K, 6827 AV Arnhem (NL). **HAY, Eric**; c/o Westervoortsedijk 71 K, 6827 AV Arnhem (NL). **GRIMSHAW, Stewart**; c/o Westervoortsedijk 71 K, 6827 AV Arnhem (NL).

(74) Agent: **PATENTWERK B.V.**; P.O. Box 1514, 5200 BN 's-Hertogenbosch (NL).

(81) Designated States *(unless otherwise indicated, for every kind of national protection available)*: AE, AG, AL, AM, AO, AT, AU, AZ, BA, BB, BG, BH, BN, BR, BW, BY, BZ, CA, CH, CL, CN, CO, CR, CU, CV, CZ, DE, DJ, DK, DM, DO, DZ, EC, EE, EG, ES, FI, GB, GD, GE, GH, GM, GT, HN, HR, HU, ID, IL, IN, IQ, IR, IS, IT, JM, JO, JP, KE, KG, KH, KN, KP, KR, KW, KZ, LA, LC, LK, LR, LS, LU, LY, MA, MD, MG, MK, MN, MU, MW, MX, MY, MZ, NA, NG, NI, NO, NZ, OM, PA, PE, PG, PH, PL, PT, QA, RO, RS, RU, RW, SA, SC, SD, SE, SG, SK, SL, ST, SV, SY, TH, TJ, TM, TN, TR, TT, TZ, UA, UG, US, UZ, VC, VN, WS, ZA, ZM, ZW.

(84) Designated States *(unless otherwise indicated, for every kind of regional protection available)*: ARIPO (BW, CV, GH, GM, KE, LR, LS, MW, MZ, NA, RW, SC, SD, SL, ST, SZ, TZ, UG, ZM, ZW), Eurasian (AM, AZ, BY, KG, KZ, RU, TJ, TM), European (AL, AT, BE, BG, CH, CY, CZ, DE, DK, EE, ES, FI, FR, GB, GR, HR, HU, IE, IS, IT, LT, LU, LV, MC, ME, MK, MT, NL, NO, PL, PT, RO, RS, SE, SI, SK, SM, TR), OAPI (BF, BJ, CF, CG, CI, CM, GA, GN, GQ, GW, KM, ML, MR, NE, SN, TD, TG).

Published:
— *with international search report (Art. 21(3))*

(54) Title: HYDROGEN GENERATION USING A CATALYTIC MEMBRANE REACTOR

(57) Abstract: The invention relates to a hydrogen generating catalytic membrane reactor system. The invention further relates to a method for, in particular in steady state self-sustained, hydrogen generation using a catalytic membrane reactor. The invention also relates to a method for generating heat from a retentate out stream of a hydrogen catalytic membrane reactor.

WO 2024/253530 A1

Hydrogen Generation using a Catalytic Membrane Reactor

The invention relates to a catalytic membrane reactor system and a method for (self-sustained) hydrogen generation using a catalytic membrane reactor and a method for generating heat from a retentate out stream of a hydrogen catalytic membrane reactor.

Catalytic membrane reactors can be used to generate hydrogen from hydrogen carrier gas feeds. Examples of hydrogen carrier gas feeds are water, methane and/or ammonia. The hydrogen carrier gas feed is typically a feedstock containing at least one species containing at least one hydrogen atom. Catalytic membrane reactors need heat for their operation. The reaction occurring in these catalytic membrane reactors is endothermic, i.e. as the reaction progresses, the feed absorbs energy to decompose into products. The retentate out from the catalytic membrane reactor is usually flared off. The energy consumption of the catalytic membrane reactors is not balanced and an external energy source is used for providing sufficient heat for the endothermic reaction.

The object of the invention is thereto to provide a catalytic membrane reactor system that has an improved energy efficiency.

The invention thereto provides a (hydrogen generating) catalytic membrane reactor system, in particular a self-sustained catalytic membrane reactor system, comprising:

- optionally at least one heat exchanger; and
- at least one catalytic membrane reactor comprising multiple membranes,

wherein the catalytic membrane reactor is provided with at least one retentate out stream and at least one permeate out stream, and wherein the reactor comprises at least one catalyst, in particular a metal catalyst, for decomposing hydrogen-containing compounds, such as methane, ammonia, water and/or hydrocarbons; and

- at least one catalytic oxidizer and/or at least one burner, configured for receiving at least part of the at least one retentate out stream from the catalytic membrane reactor;

wherein preferably the heat exchanger is configured to at least exchange heat and/or cold with the catalytic membrane reactor. Preferably at least part of the flue gas stream

from the catalytic oxidizer and/or burner is directed towards the catalytic membrane reactor.

If a heat exchanger is applied, preferably at least part of the heat from the flue gas stream from the catalytic oxidizer and/or burner is used for providing heat to the heat exchanger and/or the catalytic membrane reactor. At least part of the flue gas feed from the catalytic oxidizer and/or burner can be directed towards the catalytic membrane reactor.

The heat-exchanger can be an external heat exchanger that is in connection with the reactor system and/or the reactor system itself can comprise a heat-exchanger system that is integrated within the reactor system.

The reaction occurring in these catalytic membrane reactors is endothermic, i.e. as the reaction progresses, the feed absorbs energy to decompose into products.

The feed to the reactor can be pure, mixed, or diluted with another gas. The feed will always be a hydrogen-containing molecule while the diluent gas might or might not be a hydrogen-carrier molecule.

The retentate out stream can be a mixture of the gases comprised of some composition of hydrogen and hydrogen-carrier gas. The retentate out stream may also comprise a non-hydrogen containing molecule. For example, with ammonia decomposition the retentate out stream can comprise of hydrogen, ammonia and nitrogen. The fuel for the heat preferably comes from hydrogen and hydrogen-carrier gas. The hydrogen in this stream results from a decomposition reaction occurring in the catalytic membrane reactor. It is the residual hydrogen which is not being transferred to the permeate side of the reactor.

The catalytic membrane reactor can comprise a permeable part comprising membranes and a non-permeable part.

At steady state the system can in particular be self-sustained. In an embodiment the system can operate as a stand-alone system.

In a steady state system of the system according to the present invention, the hydrogen and/or not reacted feed molecules (from the retentate in stream and/or from the feed stream) left in the retentate out feed can serve as fuel for the catalytic oxidizer and/or burner. The heat generated by this burning process is used as heat for the endothermic reaction taking place in the catalytic membrane reactor and/or heating the feed stream. This reduces the amount of energy needed for the system and improves the energy balance. Furthermore, burning/oxidizing the retentate out stream and using this heat again in the same process reduces the dependency of external energy sources. This is very beneficial from a sustainability point of view.
At steady-state the process heat is generated using the spent feed referred to as retentate out. This process heat is used to heat the feed to the desired reactor and/or provide the heat of decomposition.

In an embodiment of the system according to the present invention, the catalytic membrane reactor comprises at least one gas separation membrane which is highly permeable and/or selective towards hydrogen transport, for example Pd-alloy composite membranes, proton-conducting ceramic membranes, zeolite membranes, metal-organic framework membranes.

In an embodiment of the system according to the present invention, the at least one, preferably multiple, gas separation membrane(s) is a composite membrane and preferably further comprising a membrane support wherein the membrane support is chosen from the group of: a porous metal, a ceramic material, or a combination thereof.

In an embodiment of the system according to the present invention, the membranes of the catalytic membrane reactor are in planar or tubular configuration or a combination thereof.

Preferably each membrane comprises a membrane support. This membrane support can for example be a planar membrane support or a tubular membrane support. The membrane support can comprise a porous structure.

In an embodiment of the system according to the present invention, the membranes are in tubular configuration, wherein preferably each membrane comprises a tubular membrane support. In such a configuration, the tubular membrane support comprises an inner surface and an outer surface. In an embodiment, the catalyst can be positioned in proximity to the outer surface of the tubular membrane support, in proximity to the inner surface of the tubular membrane support, in the porous structure of the membrane support itself or a combination thereof .

In an embodiment of the system according to the present invention, the catalyst for decomposing the hydrogen containing molecule is a supported transition metal or a transition metal alloy. In an embodiment of the system according to the present invention, the catalyst for decomposing the hydrogen containing molecule comprises at least one transition metal and/or at least one transition metal alloy.

In an embodiment of the system according to the present invention, the system may further comprise a catalyst support, wherein the catalyst support comprises a metal oxide and/or a ceramic material and/or a porous metal. The catalyst support, if applied, can be the same as a membrane support, if applied. In an embodiment the membrane support and the catalyst support can be formed by one element wherein the membrane support and catalyst support can be integrally formed.

In an embodiment of the system according to the present invention, the catalyst can be present in the pores of a membrane support and/or a catalyst support.

In an embodiment of the system according to the present invention, the operation temperature of the system is at least 400 degrees Celsius at a steady-state operation.

In an embodiment of the system according to the present invention, the heat-exchanger, if applied, may comprise at least one process vessel at least partly surrounding the membrane reactor. It is also conceivable that part of the membrane reactor is surrounded by at least part of a heat-exchanger. The heat-exchanger may or may not surround the membranes within the reactor. The catalytic membrane reactor can comprise a permeable part comprising membranes and a non-permeable part. The heat-exchanger can also be positioned around the non-permeable part of the reactor.

The invention further relates to a method for (self-sustained) hydrogen generation using a catalytic membrane reactor comprising the following steps:

A) Providing at least one catalytic membrane reactor system, in particular a system according to any of the claims 1-10, optionally comprising at least one heat exchanger and at least one catalytic membrane reactor and at least one catalytic oxidizer and/or at least one burner, wherein the system is provided with at least one retentate out stream and at least one permeate out stream,

B) Feeding the retentate out stream to the catalytic oxidizer and/or the burner;

C) Using the flue gas from the catalytic oxidizer and/or burner for heating of the catalytic membrane reactor.

To increase the calorific value of the fuel for obtaining the desired energy, the retentate pressure, permeate pressure and/or the flow rate of the feed stream and/or the retentate in stream can be changed to obtain different compositions of retentate out stream. Another way of increasing the calorific value of the retentate out stream can be to optionally add molecules from the feed stream to the retentate out stream bypassing the reactor.

Thus, optionally, the method comprises the step of adjusting the pressure of the retentate out stream and/or of the permeate out stream and the optional step of adjusting the flow rate of retentate in stream and/or feed stream.

The inventive concept of the invention also applies to a method for generating heat from a retentate out stream. The invention also relates to a method for generating heat from a retentate out stream of a hydrogen catalytic membrane reactor, wherein the retentate

out stream comprises hydrogen and/or hydrogen-carrier gas, comprising the, in particular subsequent, steps of:

i) Providing a hydrogen catalytic membrane reactor comprising a process vessel and a retentate out stream;

ii) Mixing an oxidizing compound with the retentate out stream to form a fuel mixture, for example the oxidizing compound comprises oxygen, air and/or steam;

iii) Feeding the fuel mixture from step ii) to a burner or catalytic oxidizer;

iv) Oxidizing, for example by catalytic oxidation and/or combustion of, the fuel mixture in the burner or catalytic oxidizer for generating a heated flue gas mixture;

v) Feeding the flue gas mixture from step iv) to a process vessel for providing heat to the catalytic membrane reactor.

Optionally, the pressure of the retentate out and/or retentate in stream and/or the flow rate of the retentate out stream in the method according to the present invention is adjustable.

The retentate out can be a mixture of the gases comprised of some composition of hydrogen and hydrogen-carrier gas. The retentate out can also comprise a non-hydrogen containing molecule. For example, with ammonia decomposition the retentate out stream can comprise of hydrogen, ammonia and nitrogen. The fuel for the heat preferably comes from hydrogen and hydrogen-carrier gas. The hydrogen in this stream results from a decomposition reaction occurring in the catalytic membrane reactor. It is the residual hydrogen which is not being transferred to the permeate side of the reactor.

Below two non-limited examples are described for increasing the calorific value of the retentate out stream.

Example 1: Increasing the calorific value/energy content of the Retentate Out Stream by increasing the permeate pressure.

Increasing the permeate pressure will decrease hydrogen flux across a pressure-driven membrane process. Hence, the mass fraction of hydrogen will increase on the retentate side. This increase in the mass fraction of hydrogen increases the fuel content

of the retentate stream thereby increasing the overall energy content of the retentate stream. A back pressure regulator can be added at the end of the permeate stream to increase the permeate pressure.

- For a given model membrane reactor doing ammonia decomposition, the feed flow rate is set to 1 kg/day, retentate pressure is set to 5 barg and permeate pressure is set to 0 barg. This reactor can achieve a conversion of 100% and a hydrogen recovery of 90%. This energy content of the retentate stream will be 0.53 kWh/kg of retentate stream. For the same reactor, if we change the permeate pressure to 1 barg, the recovery drops to 64 %. This will increase the hydrogen content of the retentate out stream resulting an increase in energy content to 4.3 kWh/kg of the retentate.

Example 2: Increasing the calorific value/energy content of the Retentate Out Stream by increasing the feed flow rate

Increasing the feed flow rate after a threshold will result in decreased conversion of the feed stream. This will change the retentate-out stream composition by increasing the unreacted feed content in the stream. The increased unreacted feed content in the retentate out stream increases the energy content of the retentate out stream. Tuning the feed flow control valve results in changing the feed flow rate.

- For a given model membrane reactor doing ammonia decomposition, the feed flow rate is set to 1 kg/day, retentate pressure is set to 5 barg and permeate pressure is set to 0 barg. This reactor can achieve a conversion of 100% and a hydrogen recovery of 90%. This energy content of the retentate stream will be 0.53 kWh/kg of retentate stream. For the same reactor, if we change the feed flow rate to 1.5 kg/day, the ammonia conversion drops to 90 %. This will increase the ammonia content of the retentate out stream resulting an increase in energy content to 2.36 kWh/kg of the retentate out stream.

The invention will be further elucidated by means of non-limiting exemplary embodiments illustrated in the following figures, in which:

- figure 1 shows a schematic flow diagram of an embodiment of the method according to the present invention;
- figure 2 shows a schematic view of an embodiment of the system according to the present invention.

Figure 1 shows a schematic flow diagram of an embodiment of the method according to the present invention. The figure shows a method for generating heat from a retentate out stream (spent feed) of a (hydrogen) catalytic membrane reactor, wherein the retentate out stream (spent feed) comprises hydrogen and/or hydrogen-carrier gas, comprising the, in particular subsequent, steps of:

i) Providing a (hydrogen) catalytic membrane reactor comprising a process vessel and a retentate out feed;

ii) Mixing an oxidizing compound (indicated as Oxydizer) with the retentate out feed into a fuel mixture, for example the oxidizing compound comprises oxygen, air and/or steam;

iii) Feeding the fuel mixture from step ii) to a burner or catalytic oxidizer;

iv) Oxidizing the fuel mixture in the burner or catalytic oxidizer for generating a heated flue gas mixture (flue gas);

v) Feeding the flue gas mixture from step iv) to the catalytic membrane reactor, in particular to a process vessel thereof, for providing heat to the catalytic membrane reactor.

The figure further shows a flue gas to vent stream from the heat exchanger and a feed stream towards the heat exchanger.

The figure further shows a sweep in (permeate in) stream towards the catalytic membrane reactor. This sweep in stream is optional and is used only in special cases. It may or may not be present during normal operation.

The catalytic membrane reactor and heat exchanger are (thermally) connected by a flue gas and hot feed/retentate in stream.

Figure 2 shows a schematic view of an embodiment of a system according to the present invention. The figure shows a hydrogen catalytic membrane reactor system comprising:

- at least one heat exchanger (in the form of a process vessel); and
- at least one (H2 permeable) catalytic membrane reactor comprising multiple membranes,

  wherein the catalytic membrane reactor is provided with at least one retentate out stream (spent feed) and at least one permeate out stream (hydrogen stream), and wherein the reactor comprises at least one catalyst, in particular a metal catalyst, for decomposing hydrogen-containing compounds, such as methane, ammonia, water and/or hydrocarbons; and
- at least one oxidizing apparatus (not shown), for example a catalytic oxidizer and/or at least one burner and/or a catalytic incinerator, configured for receiving at least part of the at least one retentate out feed from the catalytic membrane reactor;

wherein the heat exchanger is configured to at least exchange heat and/or cold with the catalytic membrane reactor;

and wherein at least part of the flue gas stream (indicated with Flue Gas In) from the catalytic oxidizer and/or burner is directed towards the catalytic membrane reactor via the heat exchanger.

The figure further shows that the system comprises a flue gas out stream. The system further comprises a retentate in/ feed in and a sweep in/permeate in stream. The retentate in stream can be indicated as feed in or hot feed.

It will be clear that the invention is not limited to the exemplary embodiments which are illustrated and described here, but that countless variants are possible within the framework of the attached claims, which will be obvious to the person skilled in the art. In this case, it is conceivable for different inventive concepts and/or technical

measures of the above-described variant embodiments to be completely or partly combined without departing from the inventive idea described in the attached claims.

The feature ‘catalytic oxidizer’ used in this patent document can also be understood to include ‘catalytic combustion unit’ and/or ‘catalytic incinerators’.

The verb 'comprise' and its conjugations as used in this patent document are understood to mean not only 'comprise', but to also include the expressions 'contain', 'substantially contain', 'formed by' and conjugations thereof.

Claims:

1. A hydrogen generating catalytic membrane reactor system comprising:
   - preferably at least one heat exchanger; and
   - at least one catalytic membrane reactor comprising multiple membranes, wherein the catalytic membrane reactor is provided with at least one retentate out stream and at least one permeate out stream, and wherein the reactor comprises at least one catalyst, in particular a metal catalyst, for decomposing hydrogen-containing compounds, for example methane, ammonia, water and/or hydrocarbons; and
   - at least one oxidizing apparatus for oxidizing the retentate out stream, for example a catalytic oxidizer and/or at least one burner, said oxidizing apparatus configured for receiving at least part of the at least one retentate out stream from the catalytic membrane reactor;

   preferably wherein the heat exchanger is configured to at least exchange heat and/or cold with the catalytic membrane reactor;
   and wherein at least part of the flue gas stream from the catalytic oxidizer and/or burner is directed towards the catalytic membrane reactor.

2. A reactor system according to claim 1, wherein the catalytic membrane reactor comprises at least one gas separation membrane which is highly permeable and/or selective towards hydrogen transport, for example Pd composite membranes, Pd-alloy composite membranes, proton-conducting ceramic membranes, zeolite membranes, metal-organic framework membranes.

3. A reactor system according to claim 2, wherein the at least one gas separation membrane is a composite membrane and preferably further comprising a membrane support wherein the membrane support is chosen from the group of: a porous metal, a ceramic material, or a combination thereof.

4. A reactor system according to any of the previous claims, wherein the membranes of the catalytic membrane reactor are in planar or tubular configuration or a combination thereof.

5. A reactor system according to any of the previous claims, wherein the membranes are in tubular configuration and wherein preferably the catalyst is positioned on the outside, on the inside , in the porous support itself or a combination thereof.

6. A reactor system according to any of the previous claims, wherein the catalyst for decomposing the hydrogen containing molecule comprises at least one transition metal and/or at least one transition metal alloy, for example wherein the catalyst comprises a supported transition metal.

7. A reactor system according to any of the previous claims, further comprising a catalyst support, wherein the catalyst support comprises a metal oxide, a porous metal and/or a ceramic material.

8. A reactor system according to any of the previous claims, comprising a catalyst support and/or a membrane support wherein the catalyst is present in the pores of the catalyst support and/or the membrane support.

9. A reactor system according to any of the previous claims, wherein the operation temperature of the system is at least 400 °C at a steady-state operation.

10. A reactor system according to any of the previous claims, wherein the heat-exchanger comprises at least one process vessel at least partly surrounding the catalytic membrane reactor.

11. Method for (self-sustained) hydrogen generation using a catalytic membrane reactor comprising the following steps:

A) Providing at least one catalytic membrane reactor system, in particular a system according to any of the claims 1-10, comprising at least one heat exchanger and at least one catalytic membrane reactor and at least one catalytic oxidizer and/or at least one burner, wherein the system is provided with at least one retentate out feed and at least one permeate out feed,
B) Feeding the retentate out feed to the catalytic oxidizer and/or the burner;
C) Using the flue gas from the catalytic oxidizer and/or burner for heating of the catalytic membrane reactor.

12. Method according to claim 11, wherein the pressure of the retentate feed, the pressure of the permeate out feed and/or the feed flow rate of the permeate out feed and/or the retentate out feed is adjustable.

13. Method for generating heat from a retentate out stream of a hydrogen catalytic membrane reactor, wherein the retentate out feed comprises hydrogen and/or hydrogen-carrier gas, comprising the, in particular subsequent, steps of:
i) Providing a hydrogen catalytic membrane reactor comprising a process vessel and a retentate out stream;
ii) Mixing an oxidizing compound with the retentate out feed into a fuel mixture, for example the oxidizing compound comprises oxygen, air and/or steam;
iii) Feeding the fuel mixture from step ii) to a burner or catalytic oxidizer;
iv) Oxidizing the fuel mixture in the burner or catalytic oxidizer for generating a heated flue gas mixture;
v) Feeding the flue gas mixture from step iv) to a process vessel for providing heat to the catalytic membrane reactor.

14. Method according to claim 13, wherein the pressure of the retentate out stream and/or the flow rate of the feed stream and/or the flow rate of the retentate in stream is adjustable.

1/1

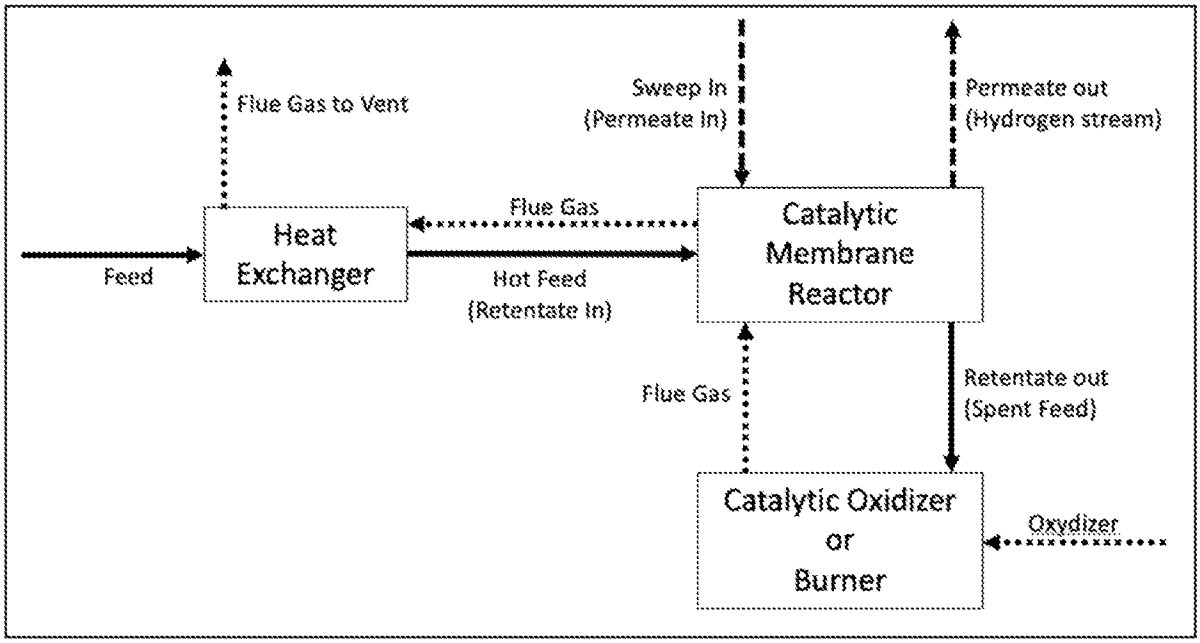
Flue Gas to Vent
Sweep In
(Permeate In)
Permeate out
(Hydrogen stream)
Flue Gas
Heat
Exchanger
Catalytic
Membrane
Reactor
Feed
Hot Feed
(Retentate In)
Flue Gas
Retentate out
(Spent Feed)
Catalytic Oxidizer
or
Burner
Oxydizer

FIG. 1

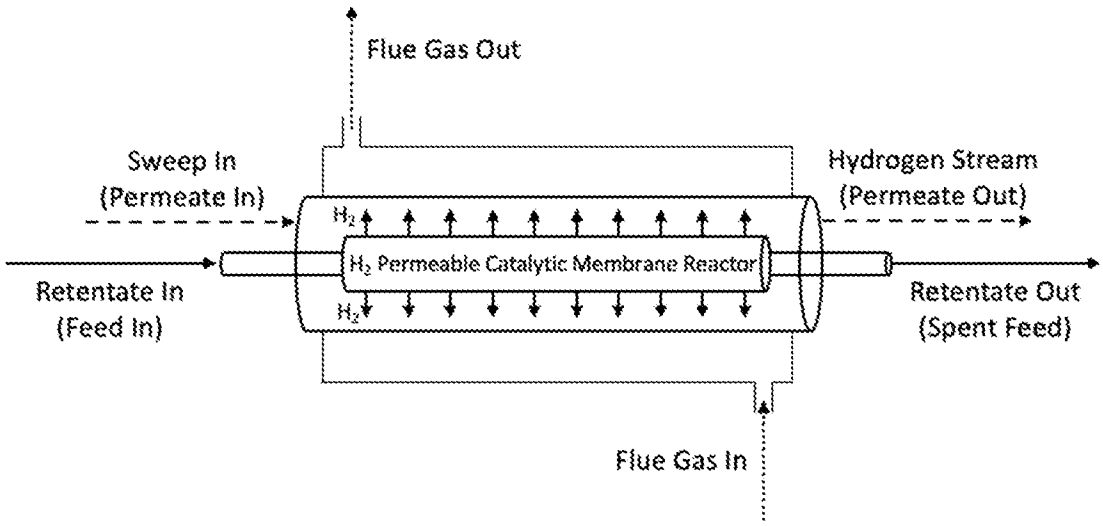
Flue Gas Out
Sweep In
(Permeate In)
Hydrogen Stream
(Permeate Out)
H_2
H_2 Permeable Catalytic Membrane Reactor
Retentate In
(Feed In)
Retentate Out
(Spent Feed)
H_2
Flue Gas In

FIG. 2

INTERNATIONAL SEARCH REPORT

International application No
PCT/NL2024/050298

A. CLASSIFICATION OF SUBJECT MATTER
INV. C01B3/04 C01B3/26 B01J19/24
ADD.

According to International Patent Classification (IPC) or to both national classification and IPC

B. FIELDS SEARCHED

Minimum documentation searched (classification system followed by classification symbols)
C01B B01J

Documentation searched other than minimum documentation to the extent that such documents are included in the fields searched

Electronic data base consulted during the international search (name of data base and, where practicable, search terms used)
EPO-Internal

C. DOCUMENTS CONSIDERED TO BE RELEVANT

Category*	Citation of document, with indication, where appropriate, of the relevant passages	Relevant to claim No.
X	US 2019/039887 A1 (LI SHIGUANG [US] ET AL) 7 February 2019 (2019-02-07) paragraph [0038] - paragraphs [0040], [0067]; claim 1; figures 1,5 claim 1	1,4,5, 9-14
X	US 2023/104624 A1 (AL-KHOWAITER AHMAD O [SA] ET AL) 6 April 2023 (2023-04-06) claims 1,4-7; figure 2 paragraph [0019] - paragraph [0023] paragraph [0034]	1,2,5-9, 11-14
X	US 2003/172589 A1 (KRUEGER CHARLES W [US]) 18 September 2003 (2003-09-18) claims 1-7; figure 1 paragraph [0033] - paragraph [0040] paragraph [0040]	1-14

☐ Further documents are listed in the continuation of Box C.

☒ See patent family annex.

* Special categories of cited documents :

"A" document defining the general state of the art which is not considered to be of particular relevance

"E" earlier application or patent but published on or after the international filing date

"L" document which may throw doubts on priority claim(s) or which is cited to establish the publication date of another citation or other special reason (as specified)

"O" document referring to an oral disclosure, use, exhibition or other means

"P" document published prior to the international filing date but later than the priority date claimed

"T" later document published after the international filing date or priority date and not in conflict with the application but cited to understand the principle or theory underlying the invention

"X" document of particular relevance;; the claimed invention cannot be considered novel or cannot be considered to involve an inventive step when the document is taken alone

"Y" document of particular relevance;; the claimed invention cannot be considered to involve an inventive step when the document is combined with one or more other such documents, such combination being obvious to a person skilled in the art

"&" document member of the same patent family

Date of the actual completion of the international search	Date of mailing of the international search report
21 August 2024	11/09/2024

Name and mailing address of the ISA/	Authorized officer
European Patent Office, P.B. 5818 Patentlaan 2 NL - 2280 HV Rijswijk Tel. (+31-70) 340-2040, Fax: (+31-70) 340-3016	Cristescu, Ioana

1

INTERNATIONAL SEARCH REPORT

Information on patent family members

International application No
PCT/NL2024/050298

Patent document cited in search report	Publication date	Patent family member(s)	Publication date
US 2019039887 A1	07-02-2019	JP 7376045 B2	08-11-2023
		JP 2020530427 A	22-10-2020
		KR 20200036865 A	07-04-2020
		US 2019039887 A1	07-02-2019
		WO 2019032591 A1	14-02-2019
US 2023104624 A1	06-04-2023	NONE	
US 2003172589 A1	18-09-2003	AU 2003212554 A1	22-09-2003
		CA 2477852 A1	18-09-2003
		CN 1638859 A	13-07-2005
		EP 1519784 A2	06-04-2005
		JP 2005519830 A	07-07-2005
		MX PA04008857 A	08-09-2005
		US 2003172589 A1	18-09-2003
		WO 03076062 A2	18-09-2003